ISEKI

Parts Catalogue

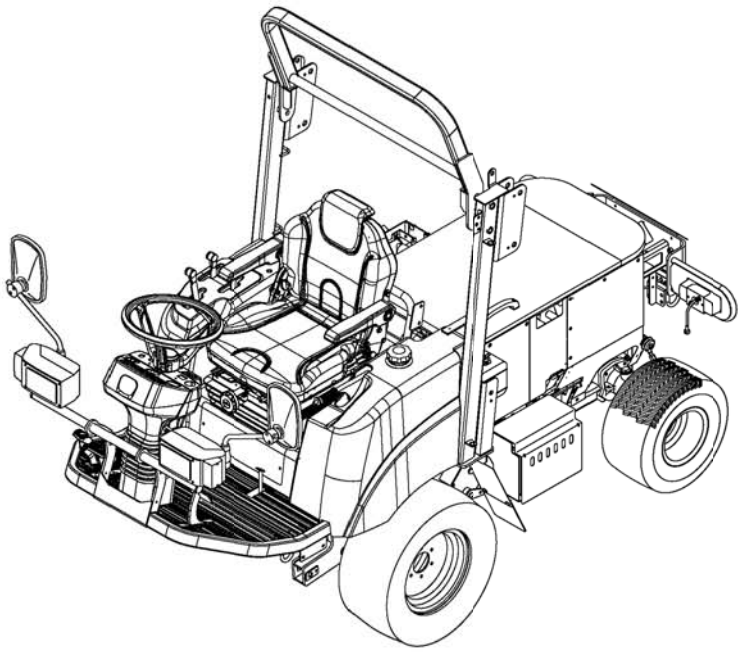

RIDING MOWER

SF224F
SF235F

SF224F-BGRE42,BGZRE42,GWZRE42
SF235F-BGRE42,BGZRE42,GWZRE42

1832-097-100-00

Printed in Japan October,2017

Directions for use of Parts Catalogue

1. Applicable model of machines

All component and option parts used for SFH224F/SF235F riding mower are listed in this parts catalogue.

1) MODEL TYPE

B····· BLOWER CASE

G····· WITH EXTRA SPECIFICATIONS FOR LOCAL HOMOLOGATION

R····· ROPS

Z····· WITH SEAT

W····· WITH WEIGHT

2····· TURF TIRE

2) AREA CODE

E4····· EUROPE

2. Details of the Structure Table of Model

*** **Structure Table of Model** ***

MODEL	SF310 FHUXWE4	SF370 FHUXWE4									
FIG.											
1	***	***									
2	*	*									
3		***									
4	***										
5		***									
6	***										
7	***	***									
8	***										

①

③

②

① FIG. : Parts structure of the machine is classified by its functions. FIG. number corresponds to the number written at the top of the parts illustration.

② Model : Shows the name of the model.

③ Structure Table : Shows which functions are originally equipped or can be

equipped afterwards for each machines

`*´ Standard Parts

`T´ Optional Parts

`R´ Repair Parts (parts which can only be used for repairs)

3. Explanation for head paragraph

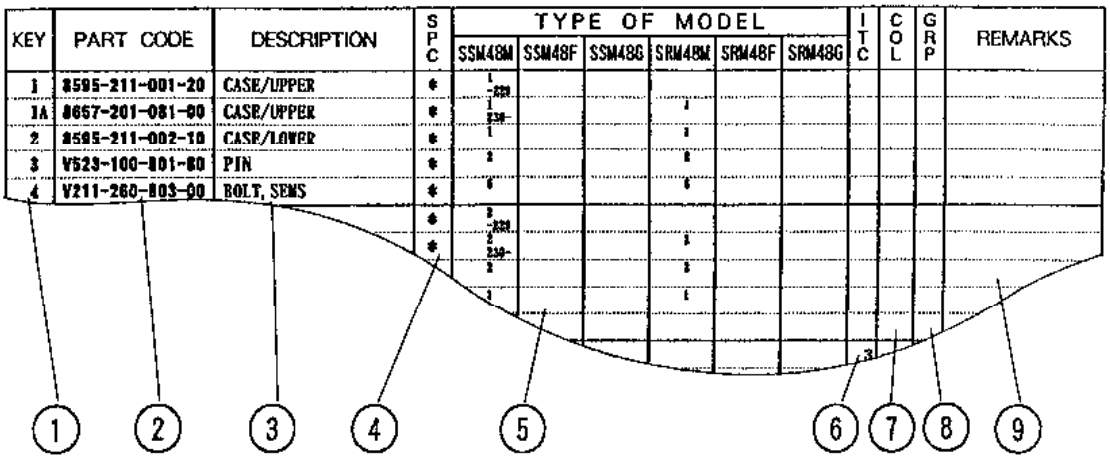

KEY	PART CODE	DESCRIPTION	SPC	TYPE OF MODEL						ITC	COL	GRP	REMARKS
				SSM48M	SSM48F	SSM48G	SRM48M	SRM48F	SRM48G				
1	8595-211-001-20	CASE/UPPER	*	1									
1A	8657-201-081-00	CASE/UPPER	*	1			1						
2	8595-211-002-10	CASE/LOWER	*	1			1						
3	V523-100-801-80	PIN	*	2			2						
4	V211-260-803-00	BOLT, SEMS	*	6			6						
			*	3									
			*	2			2						
				2			2						
				1			1						

① KEY shows the location of parts diagramed in the illustration.

② Parts numbers begin with `V´ and `W´ are standard parts of the market.

③ `LH´ and `RH´ on the parts name are described against the moving direction of the machine or are described on the condition how to install parts on the machines.

④ SPC : The following symbol classifies parts to be used for machines.

`*´ means standard parts.

`T´ shows that the parts can be installed as optional parts.

`R´ shows that the parts can be used as applicable parts to replace originally equipped parts.

⑤ Upper column : QTY shows the number of parts to be used for one unit of machine.

`M´ is indicated for parts supplied by a meter long.

`l´ is indicated for parts supplied by liter.

`AR´ is indicated for parts need to be adjusted or regulated.

Lower column : serial number

—229 means serial number up to 229.

230— means serial number 230 and after.

⑥ ITC : Interchangeability

`1´…OLD ← NEW

New parts can be used in place of the old parts.

`2´…OLD → NEW

Old parts can be used in place of the new parts.

`3´…OLD →← NEW

Old parts and new parts can not be replaced each other.

⑦ COL : Color code

Color is signified with color code number for colored parts.

Please see the color list shown in the next page.

⑧ GRP : Parts shown in this column can be replaced by SET parts.

Example : Parts marked Ⓐ can be replaced by parts marked Ⓑ, and Ⓓ for Ⓒ, so the rest follow in the same alphabetical order.

⑨ Remarks

＊Other maker's part code number is shown in this column.

＊When Fig. No. is shown in the Remark column of SET parts or ASSY parts, each of their component parts are listed in said Fig. No.

4. Color :

The following colors are used color parts.

COLOR CODE	COLOR	SPRAY TYPE PARTS CODE	PAINTS 4K DRUM PARTS CODE	PAINTS 16K DRUM PARTS CODE
4L	NEO BLUE	1300-985-001-20	1300-985-003-00	1300-985-004-00
6G	SUMMER WHITE	1300-958-001-20	1300-958-003-00	1300-958-004-00
7F	MIRROR BLACK	1300-954-001-20	1300-954-003-00	1300-954-004-00

NOTE : Color code is signified only for the parts assigned by the maker as color parts.

5. Serial Numbers :

1) For engines serial number is stamped on CYLINDER BLOCK ASSY.
   Please see Fig. No. 6－1.

2) For chassies serial number is shown on the LABEL.
   Please see

6. Parts Order

1) When you order parts, please make sure of correct numbers.

2) When substitute parts is available, the part number ordered will be automatically turned to a new part number.

3) Please be sure to use “ISEKI GENUINE PARTS”.
   Any other similar parts other than ISEKI parts when used may cause a trouble that makes us unable to repair or guarantee the warrant.

*** Structure Table of Model ***

MODEL / FIG.	SF24F	BGRE42	BGRE42	GWZR22	SF35F	BGRE42	BGRE42	GWZR22								
1						*	*	*								
2		*	*	*												
3						*	*	*								
4		*	*	*												
5						*	*	*								
6		*	*	*												
7						*	*	*								
8		*	*	*												
9		*	*	*		*	*	*								
10		*	*	*		*	*	*								
11						*	*	*								
12		*	*	*												
13		*	*	*		*	*	*								
14		*	*	*		*	*	*								
15		*	*	*		*	*	*								
16		*	*	*		*	*	*								
17		*	*	*		*	*	*								
18		*	*	*		*	*	*								
19		*	*	*		*	*	*								
20		*	*	*		*	*	*								
21		*	*	*		*	*	*								
22		*	*	*		*	*	*								
23		*	*	*		*	*	*								
24		*	*			*	*									
25				*				*								
26		*	*	*		*	*	*								
27						*	*									
28		*	*													
29		*	*	*		*	*	*								
30		*	*	*		*	*	*								
31		*	*	*		*	*	*								
32		*	*	*		*	*	*								
33		*	*	*		*	*	*								
34		*	*	*		*	*	*								
35		*	*	*		*	*	*								
36		*	*	*		*	*	*								
37		*	*	*		*	*	*								
38		*	*	*		*	*	*								
39		*	*	*		*	*	*								
40		*	*	*		*	*	*								
41		*	*	*		*	*	*								
42		*	*			*	*									
43				*				*								
44		*	*			*	*									
45				*				*								

*** Structure Table of Model ***

MODEL / FIG.	SF2 BBGG2 GGWZ3 RZZ5 FERRF 4ERE 24E4 2 22	SF2 BBG GGW RZZ ERR 4EE 24 4 2 2									
46	* * *	* * *									
47	* * *	* * *									
48	* * *	* * *									
49	* * *	* * *									
50	* * *	* * *									
51	* * *	* * *									
52	* * *	* * *									
53	* * *	* * *									
54	* * *	* * *									
55	* * *	* * *									
56	* * *	* * *									
57	* * *	* * *									
58	* * *	* * *									
59	* * *	* * *									
60	* * *	* * *									
61	T * *	T * *									
62	* * *	* * *									
63	* *	* *									
64	*	*									
65	* * *	* * *									
66	* * *	* * *									
67	* * *	* * *									
68	* * *										
69	* * *	* * *									
70	* * *	* * *									
71	* * *	* * *									
72	* *	* *									
73		* * *									
74	* * *										
75	* * *	* * *									
76		* * *									
77	* * *										
78	* * *	* * *									
79	T T *	T T *									
80	T T T	T T T									
81	T T T	T T T									
82	* * *	* * *									
83	* * *	* * *									
84	* * *	* * *									
85	* *	* *									
86	* * *	* * *									
87	* * *	* * *									

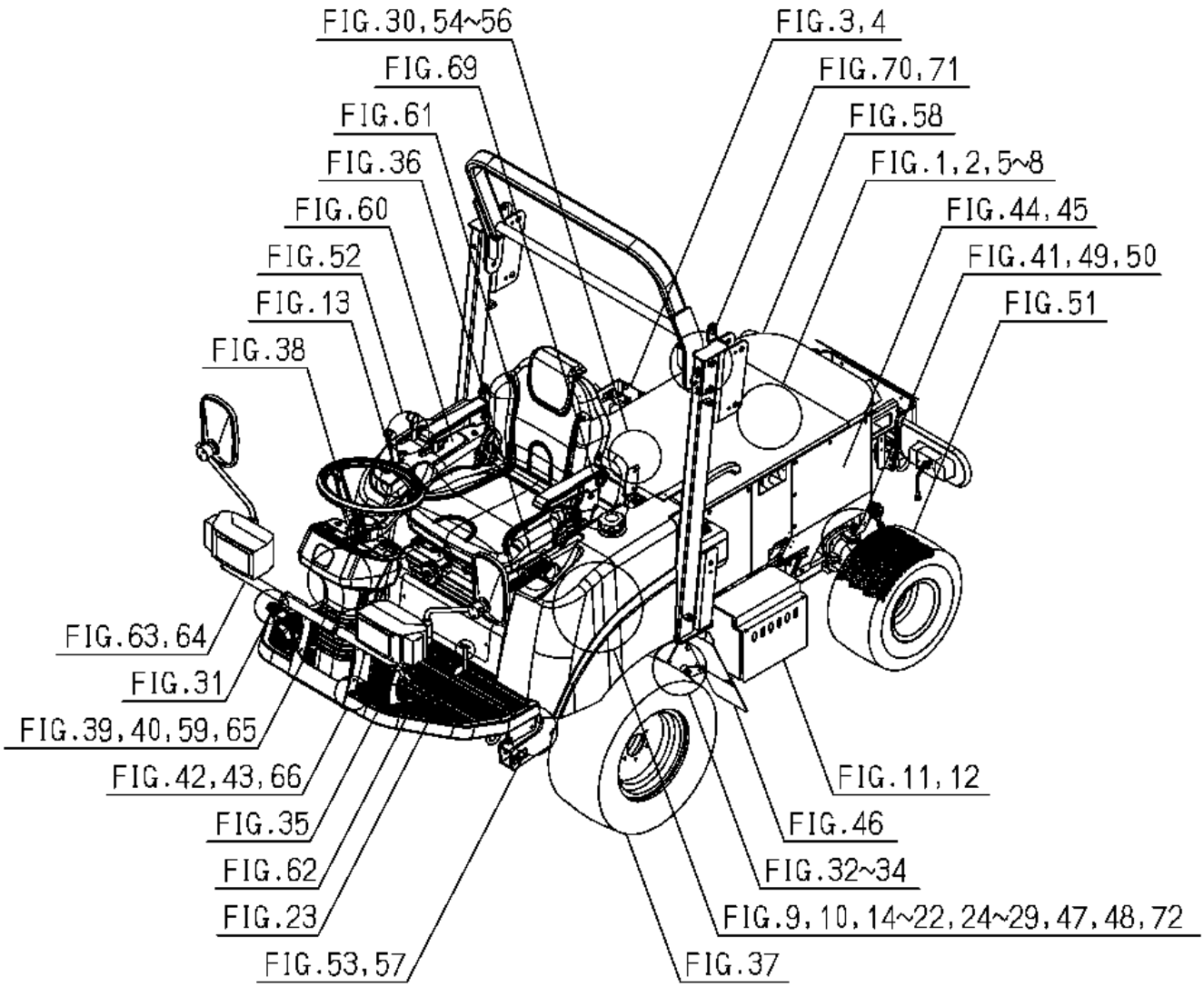
FIG.30,54~56
FIG.69
FIG.61
FIG.36
FIG.60
FIG.52
FIG.13
FIG.38
FIG.63,64
FIG.31
FIG.39,40,59,65
FIG.42,43,66
FIG.35
FIG.62
FIG.23
FIG.53,57
FIG.3,4
FIG.70,71
FIG.58
FIG.1,2,5~8
FIG.44,45
FIG.41,49,50
FIG.51
FIG.11,12
FIG.46
FIG.32~34
FIG.9,10,14~22,24~29,47,48,72
FIG.37

Contents

SF224F

ENGINE(E3112-G08)

SHORT BLOCK ENGIASSY····· Fig. 1
CYLINDER HEAD····· Fig. 2
CYLINDER HEAD COVER····· Fig. 3
INLET MANIFOLD····· Fig. 4
EXHAUST MANIFOLD····· Fig. 5
CYLINDER BLOCK····· Fig. 6
BEARING/UNDER SIZE (OPTION)····· Fig. 7
OIL PAN····· Fig. 8
REAR PLATE····· Fig. 9
TIMING GEAR CASE····· Fig. 10
HANGER····· Fig. 11
VALVE····· Fig. 12
CAM SHAFT····· Fig. 13
PISTON····· Fig. 14
PISTON/OVER SIZE (OPTION)····· Fig. 15
CRANK SHAFT····· Fig. 16
OIL PUMP····· Fig. 17
WATER PUMP····· Fig. 18
COOLING FAN····· Fig. 19
INJECTION NOZZLE····· Fig. 20
INJECTION PUMP····· Fig. 21
FUEL PIPE····· Fig. 22
ADAPTER····· Fig. 23
ELECTRIC (1)····· Fig. 24

ELECTRIC (2)····· Fig. 25
REPAIR PARTS(OPTION)·····Fig. 26
REPAIR PARTS(OPTION)·····Fig. 27
COMPONENT PARTS
FOR 6215-300-036-10 ON Fig.20·····Fig. 28
COMPONENT PARTS
FOR 6215-600-103-30 ON Fig.21·····Fig. 29
COMPONENT PARTS
FOR 6281-200-015-00 ON Fig.24·····Fig. 30

Contents

SF235F

ENGINE(E3CD-VG04)

SHORT BLOCK ENGIASSY····· Fig. 1
CYLINDER HEAD····· Fig. 2
CYLINDER HEAD COVER····· Fig. 3
INLET MANIFOLD····· Fig. 4
EXHAUST MANIFOLD····· Fig. 5
CYLINDER BLOCK····· Fig. 6
BEARING/UNDER SIZE (OPTION)····· Fig. 7
OIL PAN····· Fig. 8
REAR PLATE····· Fig. 9
TIMING GEAR CASE····· Fig. 10
HANGER····· Fig. 11
VALVE····· Fig. 12
CAM SHAFT····· Fig. 13
PISTON····· Fig. 14
PISTON/OVER SIZE (OPTION)····· Fig. 15
CRANK SHAFT····· Fig. 16
OIL PUMP····· Fig. 17
WATER PUMP····· Fig. 18
COOLING FAN····· Fig. 19
INJECTION NOZZLE····· Fig. 20
INJECTION PUMP····· Fig. 21
FUEL PIPE····· Fig. 22
ADAPTER····· Fig. 23
ELECTRIC (1)····· Fig. 24

ELECTRIC (2)····· Fig. 25
REPAIR PARTS(OPTION)·····Fig. 26
COMPONENT PARTS
FOR 6215-300-045-10 ON Fig.20·····Fig. 27
COMPONENT PARTS
FOR 6215-600-104-20 ON Fig.21·····Fig. 28
COMPONENT PARTS
FOR 6281-100-002-50 ON Fig.24·····Fig. 29
COMPONENT PARTS
FOR 6281-200-015-00 ON Fig.24·····Fig. 30

Contents

CHASSIS

BRACKET(ENGINE)SYSTEM
(SF235F TYPE)·····Fig. 1
BRACKET(ENGINE)SYSTEM
(SF224F TYPE)·····Fig. 2
RADIATOR SYSTEM(SF235F TYPE)·····Fig. 3
RADIATOR SYSTEM(SF224F TYPE)·····Fig. 4
MUFFLER SYSTEM(SF235F TYPE)·····Fig. 5
MUFFLER SYSTEM(SF224F TYPE)·····Fig. 6
CLEANER(AIR)SYSTEM(SF235F TYPE)·····Fig. 7
CLEANER(AIR)SYSTEM(SF224F TYPE)·····Fig. 8
PIPING(FUEL)SYSTEM·····Fig. 9
TANK(FUEL)SYSTEM·····Fig. 10
BATTERY SYSTEM(SF235F TYPE)·····Fig. 11
BATTERY SYSTEM(SF224F TYPE)·····Fig. 12
LEVER(ACCELERATOR)SYSTEM·····Fig. 13
CABLE(ACCELERATOR)SYSTEM·····Fig. 14
SHAFT(INPUT)SET SYSTEM·····Fig. 15
CASE(TRANSMISSION)SYSTEM·····Fig. 16
METAL(HST)SYSTEM·····Fig. 17
GEAR(INPUT)SYSTEM·····Fig. 18
HST SYSTEM·····Fig. 19
GEAR(INPUT)SYSTEM·····Fig. 20
CASE(DIFFERENTIAL)SYSTEM·····Fig. 21
DIFF-LOCK SYSTEM·····Fig. 22
PEDAL(DIFF-LOCK)SYSTEM·····Fig. 23
METAL(PTO/BLOWER)SYSTEM(B TYPE)·····Fig. 24
METAL(PTO/BLOWER)SYSTEM
(EXCEPT B TYPE)·····Fig. 25

DRIVE(PTO/SIDE)SYSTEM ..... Fig. 26
DRIVE(PTO/BLOWER)SYSTEM
(B TYPE SF235F) ..... Fig. 27
DRIVE(PTO/BLOWER)SYSTEM
(B TYPE SF224F) ..... Fig. 28
COVER(PTO/SIDE)SYSTEM ..... Fig. 29
LINK(HST)SYSTEM ..... Fig. 30
PEDAL(HST)SYSTEM ..... Fig. 31
CASE(CHAIN)SYSTEM ..... Fig. 32
SHAFT(WHEEL/FRONT)SYSTEM ..... Fig. 33
BRAKE SYSTEM ..... Fig. 34
PEDAL(BRAKE)SYSTEM ..... Fig. 35
BRAKE(PARKING)SYSTEM ..... Fig. 36
WHEEL(FRONT)SYSTEM ..... Fig. 37
WHEEL(STEERING)SYSTEM ..... Fig. 38
COLUMN(STEERING)SYSTEM ..... Fig. 39
CONTROLLER(STEERING)SET SYSTEM ..... Fig. 40
CYLINDER(STEERING)SYSTEM ..... Fig. 41
FRAME SYSTEM(B TYPE) ..... Fig. 42
FRAME SYSTEM(EXCEPT B TYPE) ..... Fig. 43
COVER(SIDE)SYSTEM(B TYPE) ..... Fig. 44
COVER(SIDE)SYSTEM(EXCEPT B TYPE) ..... Fig. 45
MUD GUARD SYSTEM ..... Fig. 46
LEVER(4WD)SYSTEM ..... Fig. 47
AUTO(4WD)SYSTEM ..... Fig. 48
HOUSING(AXLE/REAR)SYSTEM(1/3)-(3/3) ..... Fig. 49
ROD(TIE)SYSTEM ..... Fig. 50
WHEEL(REAR)SYSTEM ..... Fig. 51
CONTROL SYSTEM ..... Fig. 52
CYLINDER(LIFT)SYSTEM ..... Fig. 53
PIPING(PUMP)SYSTEM ..... Fig. 54
PIPING(CONTROL)SYSTEM(1/2)(2/2) ..... Fig. 55
PIPING(HST)SYSTEM ..... Fig. 56

LINK(LIFT)SYSTEM····· Fig. 57
HOOD SYSTEM····· Fig. 58
COVER(STEERING)SYSTEM····· Fig. 59
FENDER SYSTEM····· Fig. 60
SEAT SYSTEM(Z TYPE-STANDARD/
EXCEPT Z TYPE-OPTION)····· Fig. 61
FLOOR SYSTEM····· Fig. 62
LIGHT SYSTEM(B TYPE)····· Fig. 63
LIGHT SYSTEM(EXCEPT B TYPE)····· Fig. 64
PANEL(SWITCH)SYSTEM····· Fig. 65
SWITCH(SAFETY)SYSTEM(1/2)(2/2)····· Fig. 66
HARNESS SYSTEM····· Fig. 67
HARNESS SYSTEM(SF224F TYPE)····· Fig. 68
CONTROLLER SYSTEM····· Fig. 69
FRAME(MAIN)SYSTEM····· Fig. 70
FRAME(UPPER)SYSTEM····· Fig. 71
BLOWER SYSTEM(B TYPE)····· Fig. 72
ORNAMENT(SF235F TYPE)····· Fig. 73
ORNAMENT(SF224F TYPE)····· Fig. 74
LABEL(CONTROL)····· Fig. 75
LABEL(CAUTION)(SF235F TYPE)····· Fig. 76
LABEL(CAUTION)(SF224F TYPE)····· Fig. 77
LABEL(CE)····· Fig. 78
WEIGHT(REAR)SET SYSTEM
(EXCEPT B TYPE-STANDARD/
B TYPE-OPTION)····· Fig. 79

OPTIONAL PARTS

PLATE(BUMPER)&BOLT SYSTEM
(OPTION····· Fig. 80
WEIGHT(15)SET(OPTION)····· Fig. 81

COMPONENT PARTS

COMPONENT PARTS
FOR K500-008-000-00 ON Fig.19 ····· Fig. 82
COMPONENT PARTS
FOR 1672-105-210-10 ON Fig.9 ····· Fig. 83
COMPONENT PARTS
FOR 1720-221-210-00 ON Fig.48 ····· Fig. 84
COMPONENT PARTS
FOR 1725-219-720-20 ON Fig.27,28 ····· Fig. 85
COMPONENT PARTS
FOR 1772-654-210-00 ON Fig.63,64 ····· Fig. 86
COMPONENT PARTS
FOR 1825-127-300-00 ON Fig.26 ····· Fig. 87

WIRING DIAGRAM

WIRING DIAGRAM (1/2)
WIRING DIAGRAM (2/2)

E N G I N E

E3112G08···SF224F

6004-097-690-00

FIG. 1 SHORT BLOCK ENGIASSY

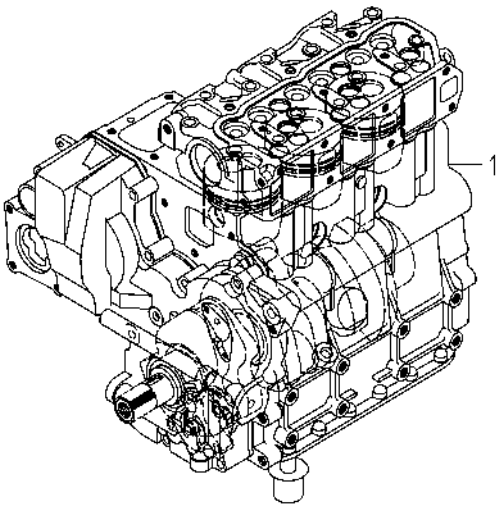

6004-016B-0100

KEY	PART CODE	DESCRIPTION	SPC	TYPE OF MODEL E3112 G08		ITC	COL	GRP	REMARKS
1	6004-010-170-00	SHORTBLOCKENGIN ASSY	T	1					

FIG. 2 CYLINDER HEAD

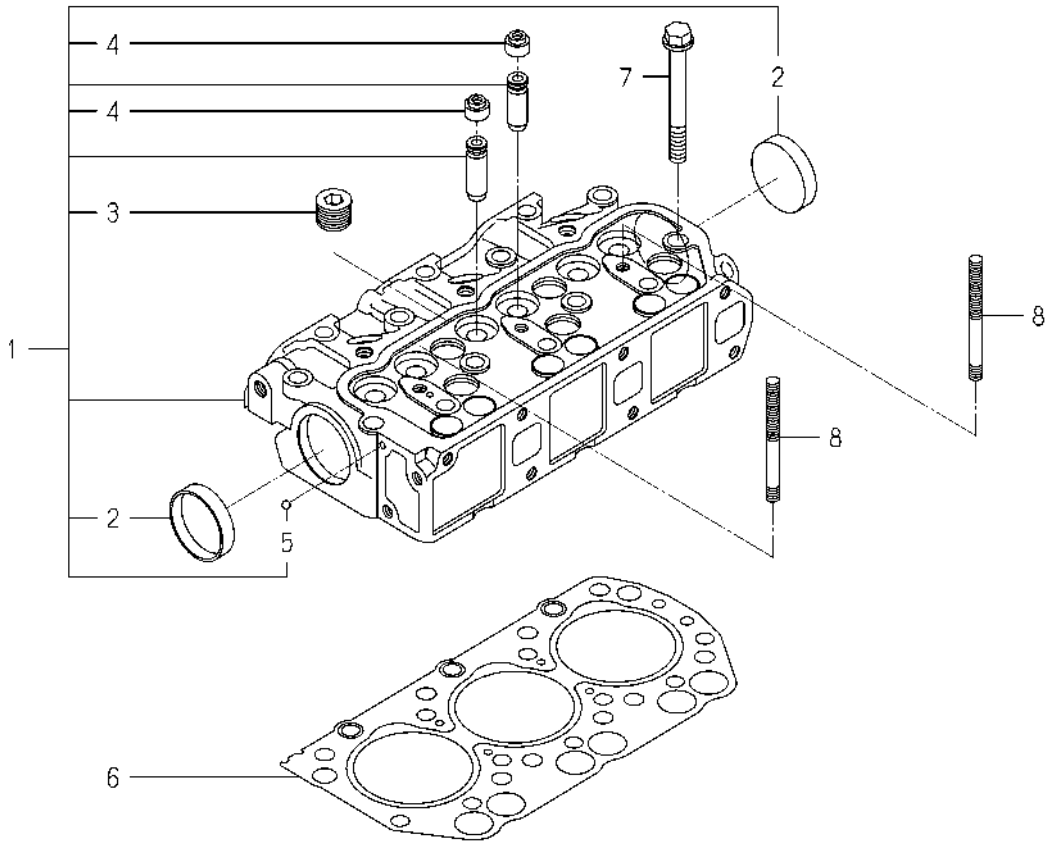

6004-101I-0100,6004-101I-0200

KEY	PART CODE	DESCRIPTION	SPC	TYPE OF MODEL E3112 G08		ITC	COL	GRP	REMARKS
1	6211-110-057-50	CYLINDERHEAD ASSY	*	1					
2	6911-129-006-00	CAP,SEALING	*	2					
3	6209-605-004-10	PLUG/PT1/2	*	5					
4	6212-569-002-00	SEAL,OIL	*	6					
5	V682-200-000-60	BALL,STEEL	*	1					
6	6211-141-029-20	GASKET/CYLINDERHEAD	*	1					
7	6209-000-044-00	BOLT	*	14					
8	6209-300-014-00	STUD	*	2					

FIG. 3 CYLINDER HEAD COVER

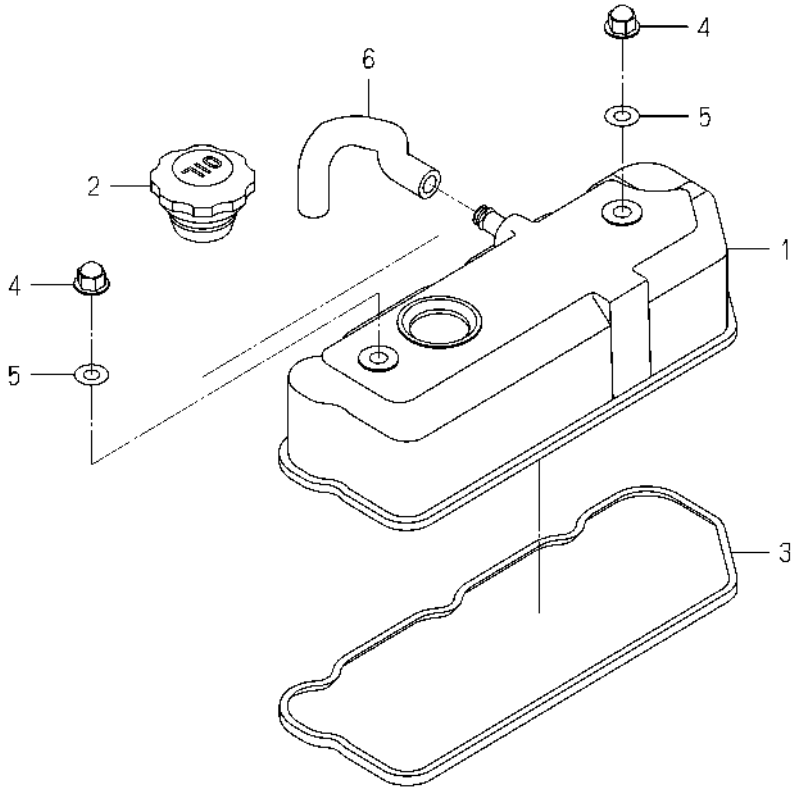

6003-110 -0100

KEY	PART CODE	DESCRIPTION	SPC	TYPE OF MODEL E3112 G08		ITC	COL	GRP	REMARKS
1	6211-170-004-20	COVER/CYLINDER HEAD	*	1					
2	6211-751-001-10	CAP,OIL FILLER	*	1					
3	6211-173-003-00	SEAL,CYL.HEAD COVER	*	1					
4	6209-490-002-10	NUT/CAP	*	2					
5	6209-572-003-00	GASKET	*	2					
6	6209-360-028-20	HOSE/RUBBER	*	1					

FIG. 4 INLET MANIFOLD

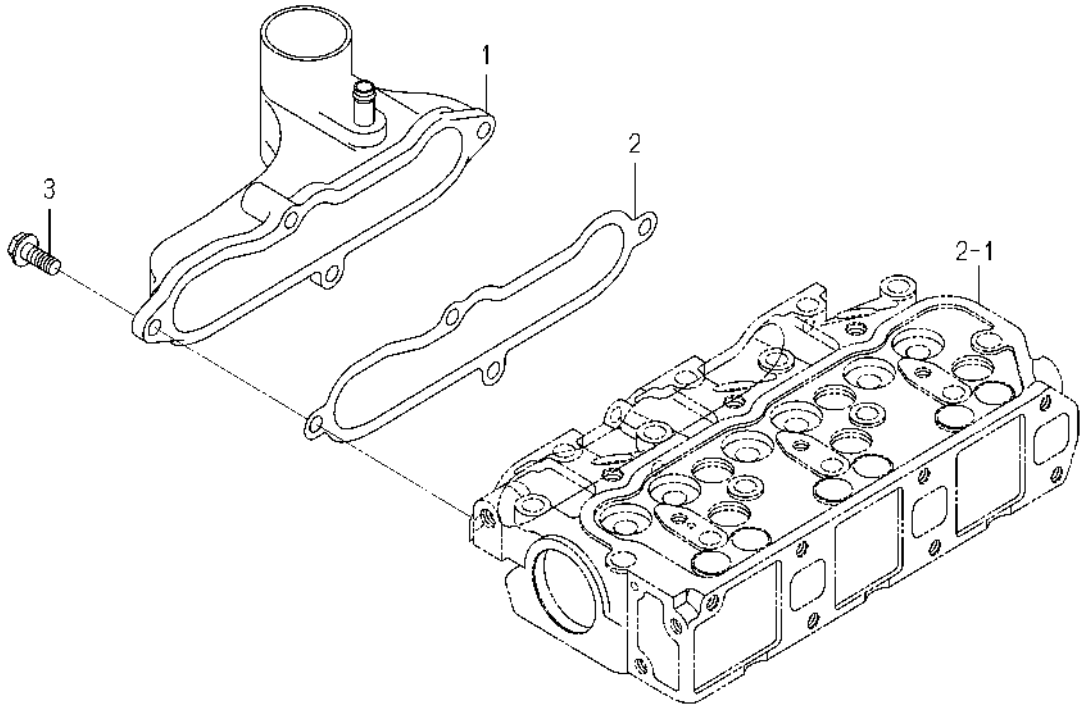

6004-120E-0100

KEY	PART CODE	DESCRIPTION	SPC	TYPE OF MODEL E3112 G08		ITC	COL	GRP	REMARKS
1	6214-111-011-20	MANIFOLD(INLET) ASSY	*	1					
2	6214-115-001-20	GASKET,INLET MANIFOL	*	1					
3	V231-360-802-00	FLANGEBOLT/M8X20	*	3					

FIG. 5 EXHAUST MANIFOLD

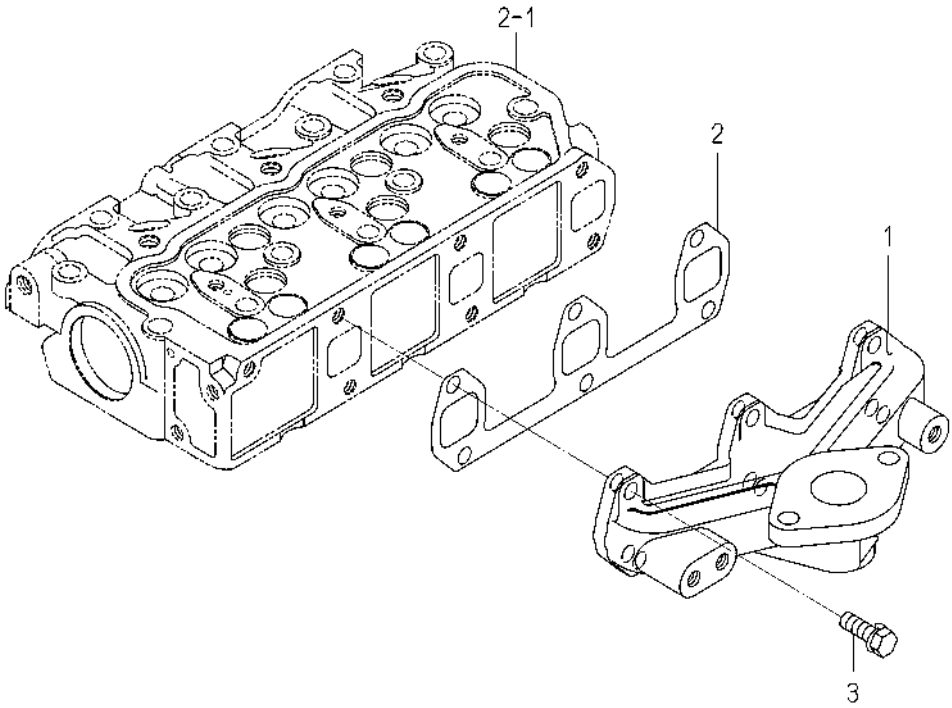

6004-140 -0100

KEY	PART CODE	DESCRIPTION	SPC	TYPE OF MODEL E3112 G08		ITC	COL	GRP	REMARKS
1	6214-141-010-10	MANIFOLD,EXH	*	1					
2	6214-145-001-30	GASKET,EXH.MANIFOLD	*	1					
3	V211-560-802-50	BOLT,S/M8X25/7T	*	6					

FIG. 6 CYLINDER BLOCK

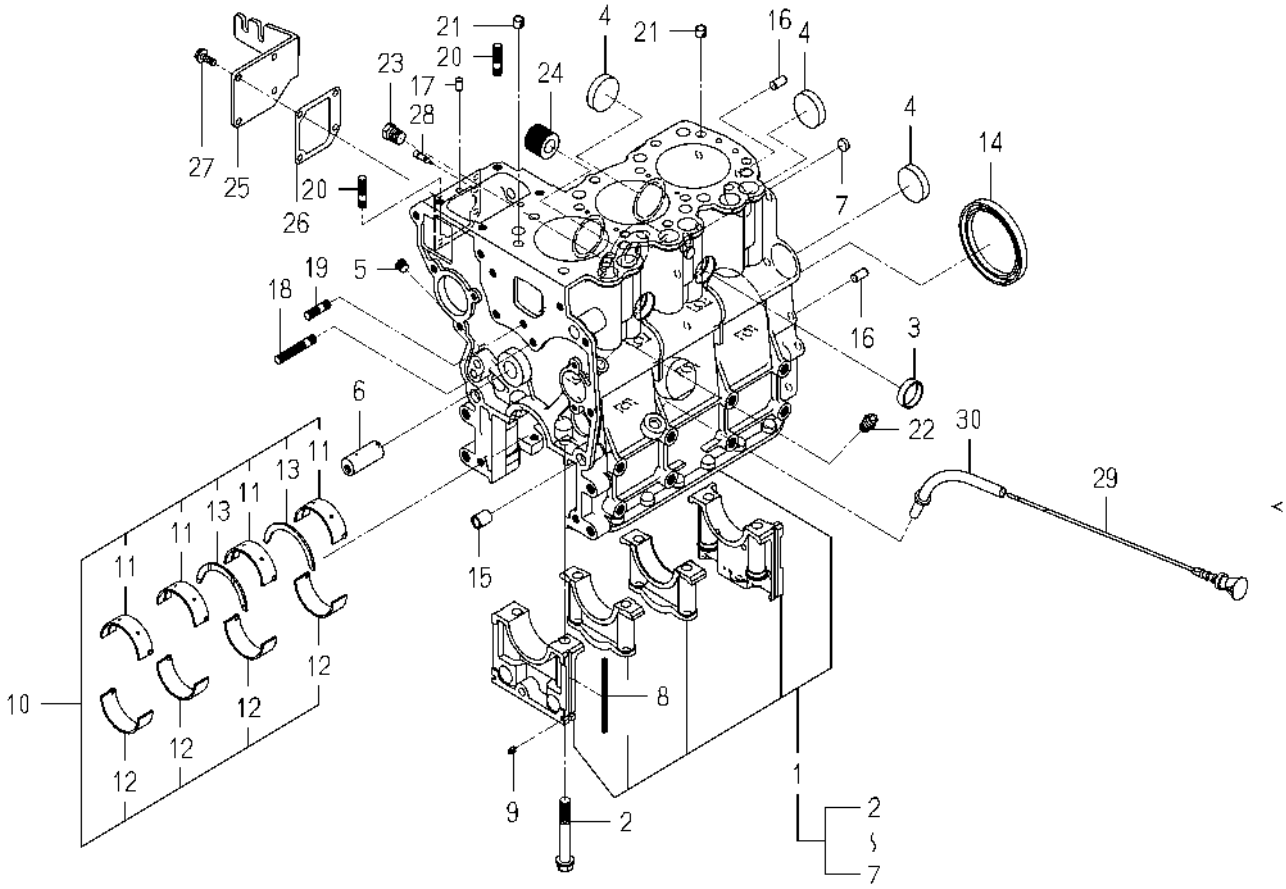

6004-203I-0100

KEY	PART CODE	DESCRIPTION	SPC	TYPE OF MODEL E3112 G08		ITC	COL	GRP	REMARKS
1	6211-210-113-10	CYLINDERBLOCK ASSY	*	1					
2	6209-000-004-10	BOLT	*	8					
3	6209-610-001-10	CUP/SEALING/28	*	2					
4	6209-610-009-00	CUP/SEALING/36	*	4					
5	6209-605-007-10	PLUG/PT1/8	*	3					
6	6212-531-014-00	PIN/IDLEGEAR	*	1					
7	6209-610-008-00	CUP/SEALING/12	*	2					
8	6211-258-001-00	SEAL,BEARING CAP	*	4					
9	6211-258-002-00	SEAL,BEARING CAP/7	*	2					
10	6211-510-021-00	BEARING/CRANKSET	*	1					
11	6211-511-023-00	BEARING/CRANK/UPPER	*	4					
12	6211-511-024-00	BEARING/CRANK/LOWER	*	4					
13	6211-599-012-00	BEARING/THRUST/CRANK	*	2					
14	6209-625-001-00	SEAL,OIL	*	1					
15	6209-749-001-20	PIN/TUBE	*	2					
16	6213-129-006-00	PIN/STRAIGHT	*	2					
17	6209-740-005-00	PIN	*	2					
18	6904-110-840-00	STUD/M8X40	*	1					
19	6904-110-818-00	STUD	*	1					
20	6904-110-822-00	STUD	*	2					
21	6294-453-002-00	DOWEL	*	2					
22	6909-902-299-00	NIPPLE	*	1					
23	V782-160-000-4T	PLUG/SCREW/SEAL	*	1					
24	6213-319-001-00	CONNECTOR,OIL FILTER	*	1					
25	6211-291-015-20	COVER/INJECTIONPUMP	*	1					
26	6211-292-001-20	GASKET/COVER	*	1					
27	V230-360-601-20	FLANGEBOLT/M6X12	*	4					
28	6215-549-013-00	PIN	*	1					
29	6211-760-035-20	LEVELGAGE	*	1					
30	6211-766-025-00	GUIDE/LEVELGAGE COMP	*	1					

FIG. 7 BEARING/UNDER SIZE (OPTION)

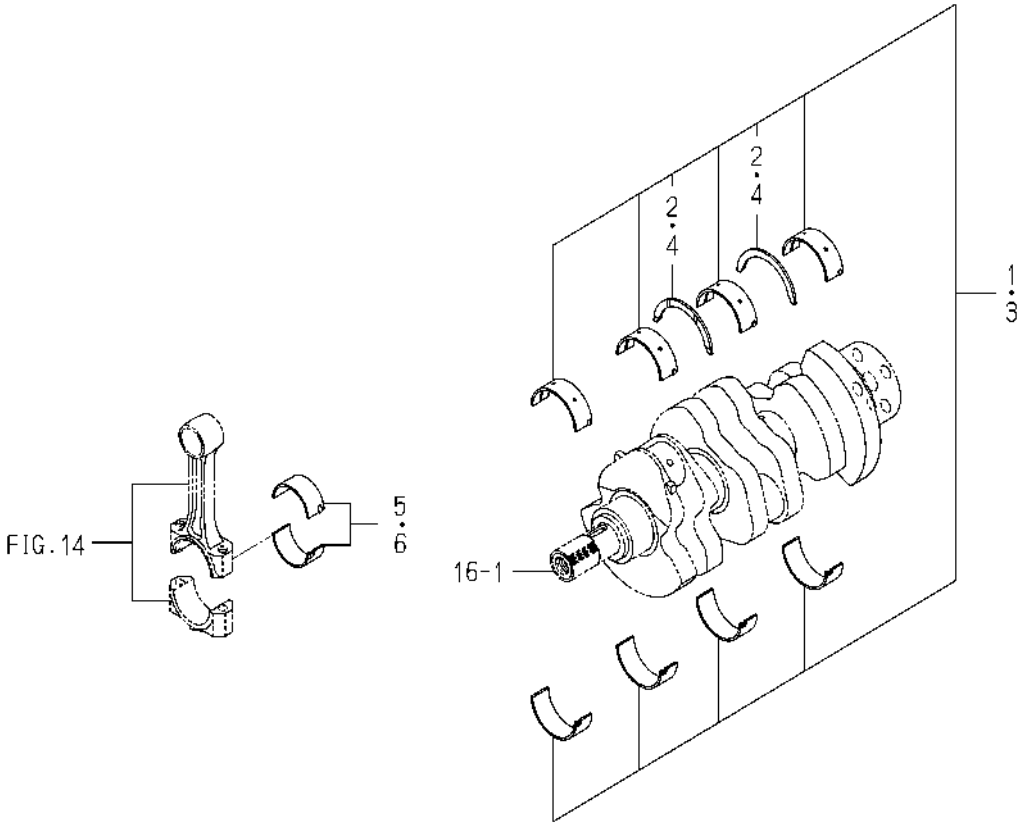

6003-209 -0100

KEY	PART CODE	DESCRIPTION	SPC	TYPE OF MODEL E3112 G08		ITC	COL	GRP	REMARKS
1	6211-540-018-00	BRG/CRANK/UN050 SET	T	1					
2	6211-599-012-00	BEARING/THRUST/CRANK	T	2					
3	6211-560-007-00	BRG/CRANK/UN100 SET	T	1					
4	6211-599-012-00	BEARING/THRUST/CRANK	T	2					
5	6212-274-016-00	BRG/CONROD/UN050 SET	T	3					
6	6212-276-016-00	BRG/CONROD/UN100 SET	T	3					

FIG. 8 OIL PAN

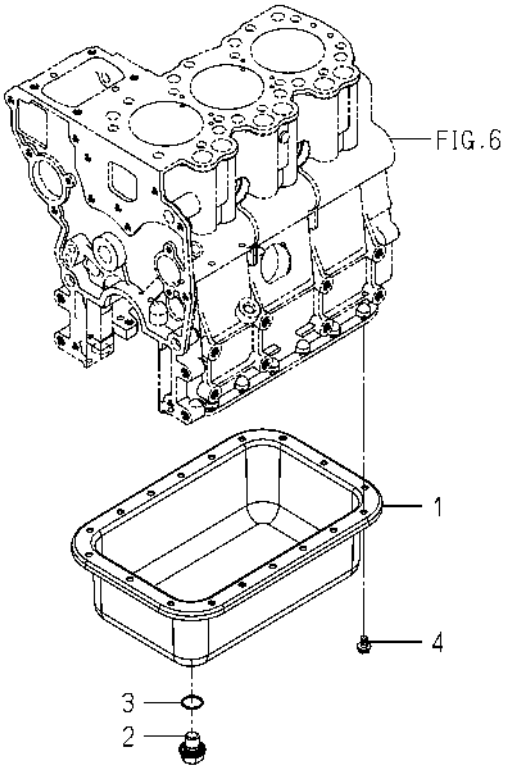

6004-210M-0100

KEY	PART CODE	DESCRIPTION	SPC	TYPE OF MODEL E3112 G08		ITC	COL	GRP	REMARKS
1	6211-361-104-00	OILPAN COMP	*	1					
2	3805-355-002-20	PLUG/M14X1.5	*	1					
3	V720-102-401-80	O-RING/1A,P18	*	1					
4	V230-360-601-00	FLANGEBOLT/M6X10	*	18					

FIG. 9 REAR PLATE

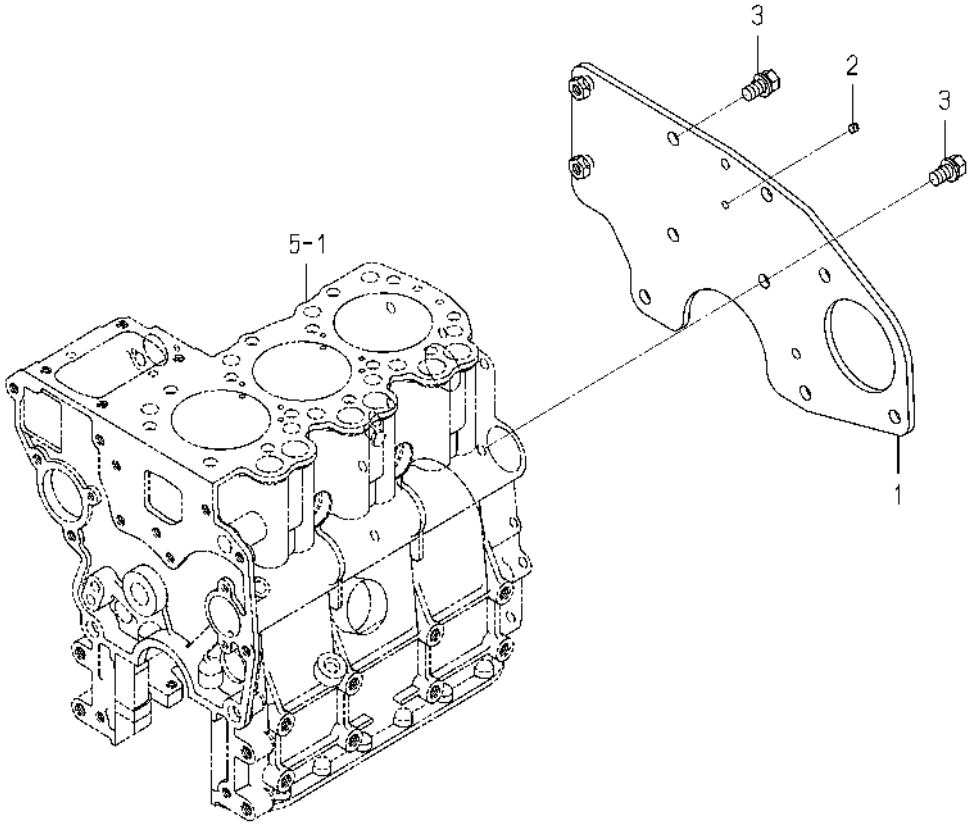

6004-220O-0100

KEY	PART CODE	DESCRIPTION	SPC	TYPE OF MODEL E3112 G08		ITC	COL	GRP	REMARKS
1	6211-340-006-10	PLATE/REAR COMP	*	1					
2	6211-342-001-30	POINTER	*	1					
3	6901-911-020-00	BOLT,SEMS/M10X20,7T	*	6					

FIG. 10 TIMING GEAR CASE

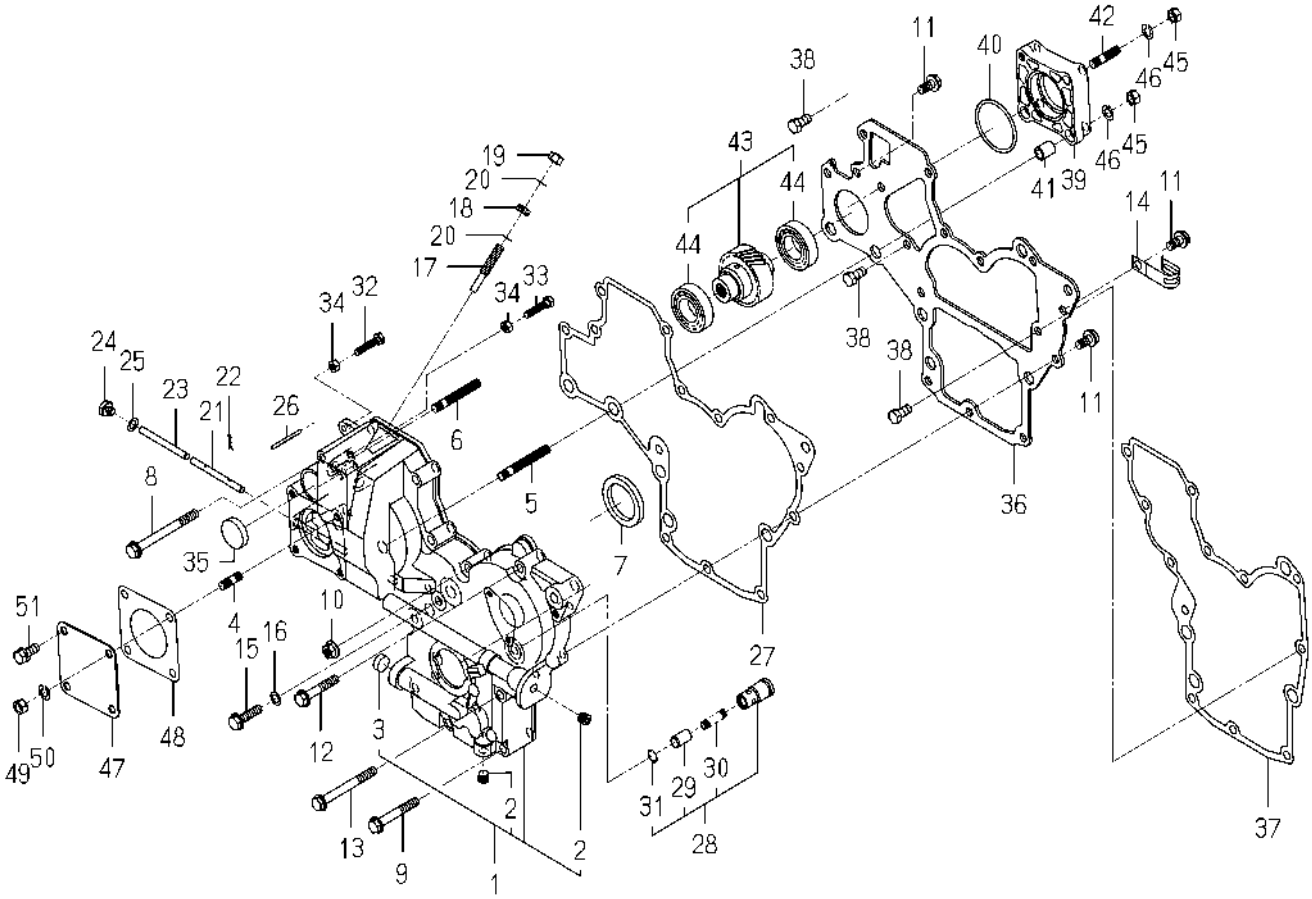

6004-240G-0100,6004-240G-0200

KEY	PART CODE	DESCRIPTION	SPC	TYPE OF MODEL E3112 G08		ITC	COL	GRP	REMARKS
1	6211-310-025-50	GEARCASE ASSY	*	1					
2	6209-605-007-10	PLUG/PT1/8	*	2					
3	6209-610-007-00	CUP/SEALING/16	*	1					
4	6904-110-822-00	STUD	*	1					
5	6904-110-855-00	STUD	*	2					
6	6904-110-850-00	STUD	*	1					
7	6209-625-002-00	SEAL,OIL	*	1					
8	V231-360-808-50	FLANGEBOLT/M8X85	*	1					
9	V231-360-805-50	FLANGEBOLT/M8X55	*	2					
10	3817-401-001-00	NUT/M08	*	1					
11	V231-360-801-60	FLANGEBOLT/M8X16	*	3					
12	V231-360-804-50	FLANGEBOLT/M8X45	*	5					
13	V231-360-807-50	FLANGEBOLT/M8X75	*	1					
14	1425-621-004-00	HOLDER/JE/9-9	*	1					
15	V231-360-803-00	FLANGEBOLT/M8X30	*	1					
16	6209-500-003-00	WASHER/08X14X01	*	1					
17	6215-546-003-30	STOPPER/FULLLOAD	*	1					
18	6209-409-001-00	NUT/M8	*	1					
19	V341-120-008-00	NUT,CAP/M8	*	1					
20	6209-920-002-00	PACKING	*	2					
21	6215-542-004-20	PIN/ARM	*	1					
22	P117-303-003-00	PIN/SNAP	*	2					
23	6215-542-005-20	PIN	*	1					
24	6209-600-004-00	PLUG/SCREW	*	1					
25	6209-500-003-00	WASHER/08X14X01	*	1					
26	6209-740-001-00	PIN,GROOVE	*	1					
27	6211-312-003-20	GASKET/GEARCASE	*	1					
28	6213-160-002-20	VALVE/RELIEF ASSY	*	1					
29	6213-161-001-20	PISTON/VALVE/RELIEF	*	1					
30	6213-164-001-00	SPRING/RELIEF VALVE	*	1					

FIG. 10 TIMING GEAR CASE

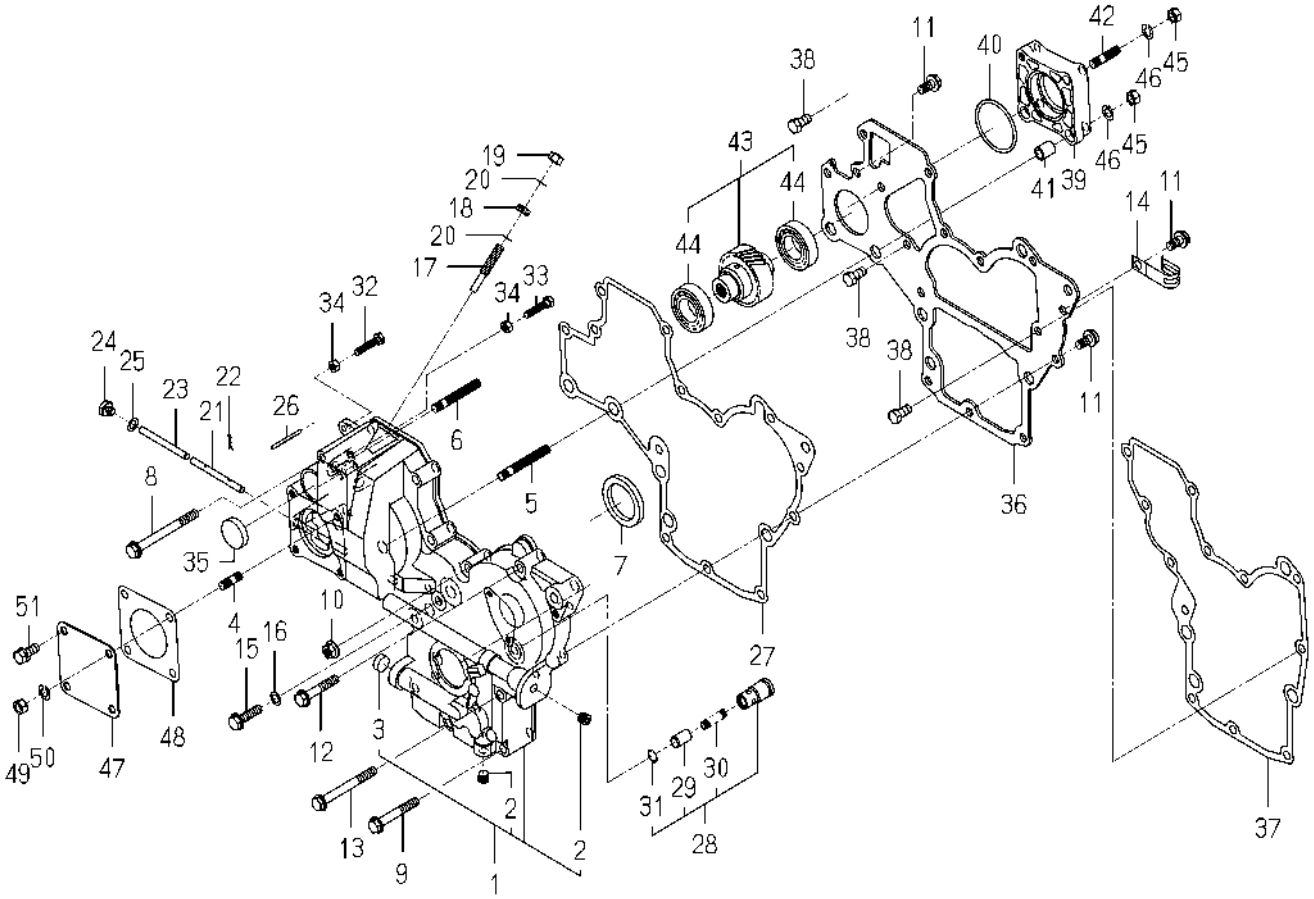

6004-240G-0100,6004-240G-0200

KEY	PART CODE	DESCRIPTION	SPC	TYPE OF MODEL E3112 G08		ITC	COL	GRP	REMARKS
31	V705-140-012-00	RING,SNAP/12 C	*	1					
32	6209-050-001-00	BOLT/M6	*	1					
33	6209-050-002-00	BOLT/M6	*	1					
34	V301-260-006-00	NUT/M6	*	2					
35	3625-540-004-00	CAP,BLANK/30	*	1					
36	6211-311-007-40	PLATE/FRONT	*	1					
37	6211-312-004-20	GASKET/PLATE	*	1					
38	6902-050-816-00	BOLT	*	3					
39	6211-319-003-00	SPACER	*	1					
40	V723-102-005-00	O-RING/1A,S50	*	1					
41	6209-749-001-20	PIN/TUBE	*	2					
42	6904-110-822-00	STUD	*	1					
43	6212-530-022-00	SHAFT/HYDRAULIC ASSY	*	1					
44	1729-202-002-00	BEARING/BALL	*	2					
45	V304-260-008-00	NUT/M8	*	4					
46	V401-160-008-00	WASHER,SP/M8	*	4					
47	6211-321-022-00	COVER/HYDRAULIC	*	1					
48	6211-322-002-00	GASKET/COVER	*	1					
49	V304-260-008-00	NUT/M8	*	1					
50	V401-160-008-00	WASHER,SP/M8	*	1					
51	V211-560-802-00	BOLT,S/M8X20/7T	*	3					

FIG. 11 HANGER

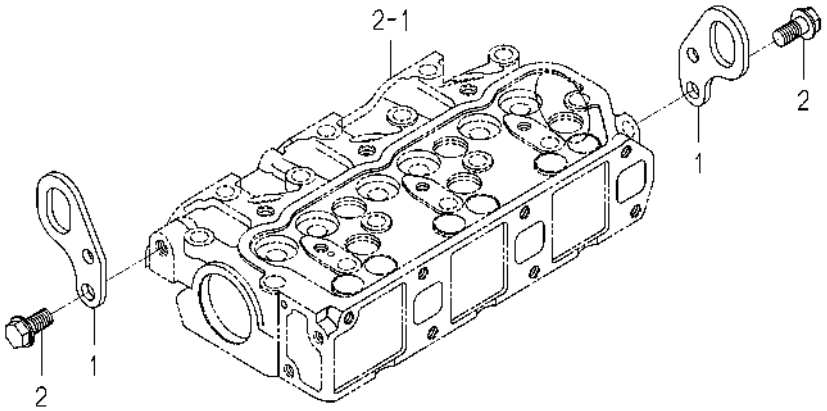

6003-290 -0100

KEY	PART CODE	DESCRIPTION	SPC	TYPE OF MODEL E3112 G08		ITC	COL	GRP	REMARKS
1	6211-777-007-30	HANGER	*	2					
2	V233-361-002-00	FLANGEBOLT/M10X20	*	2					

FIG. 12 VALVE

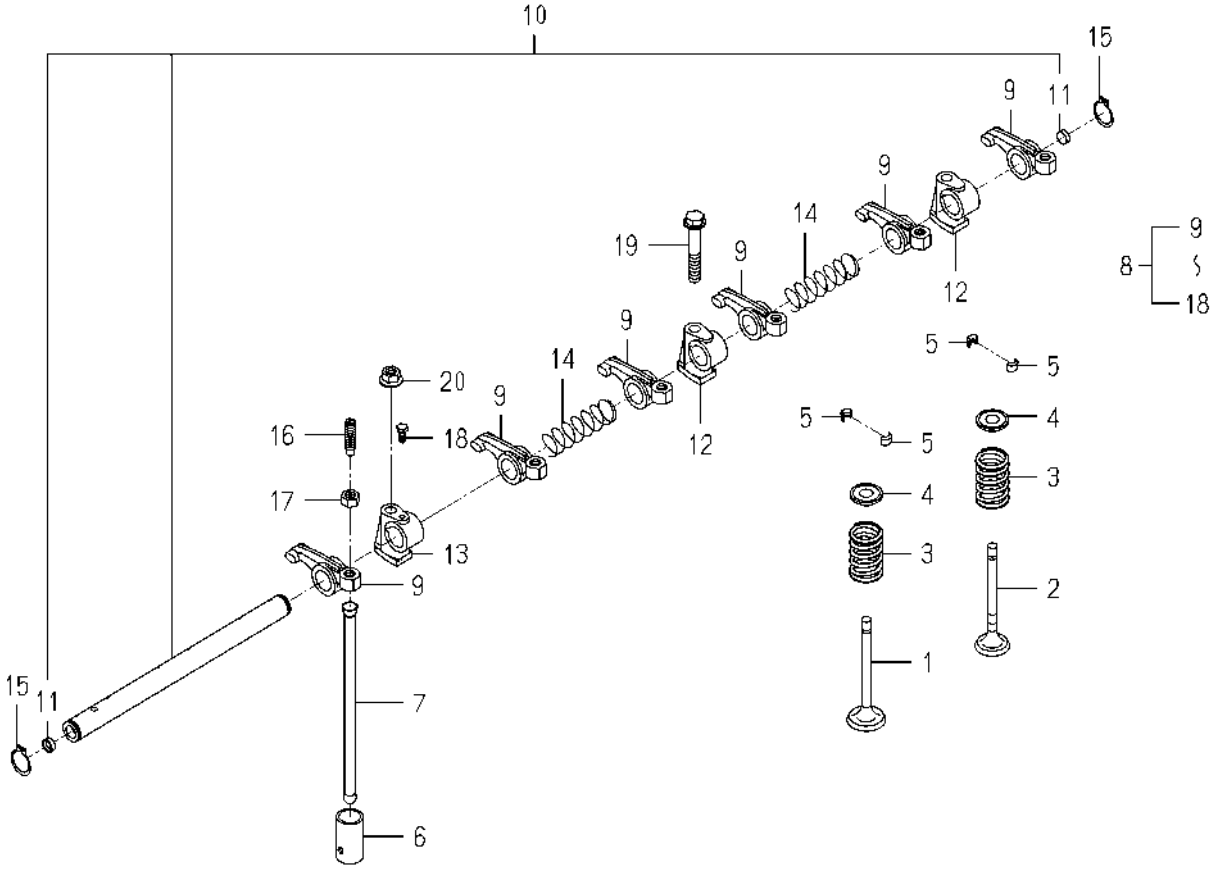

6004-301 -0100

KEY	PART CODE	DESCRIPTION	SPC	TYPE OF MODEL E3112 G08		ITC	COL	GRP	REMARKS
1	6212-551-028-00	VALVE/INTAKE	*	3					
2	6212-552-014-00	VALVE/EXHAUST	*	3					
3	6212-561-001-10	SPRING/VALVE	*	6					
4	6212-563-005-00	SEAT/VALVESPRING	*	6					
5	6212-565-001-00	CUTTER,VALVE	*	12					
6	6212-571-006-00	TAPPET	*	6					
7	6212-575-002-00	ROD,PUSH	*	6					
8	6212-600-002-30	ROCKERSHAFT ASSY	*	1					
9	6212-611-004-10	ROCKERARM	*	6					
10	6212-620-001-20	SHAFT/ROCKERARM ASSY	*	1					
11	6212-626-002-10	PLUG	*	2					
12	6212-628-004-00	BRACKET ROCKER SHAFT	*	2					
13	6212-628-005-00	BRACKET,ROCKER SHAFT	*	1					
14	6209-940-004-00	SPRING	*	2					
15	V704-140-016-00	RING,SNAP/16 C	*	2					
16	6212-616-002-00	SCREW ADJUST	*	6					
17	6209-409-003-00	NUT	*	6					
18	6209-000-002-00	BOLT	*	1					
19	V231-360-805-00	FLANGEBOLT/M8X50	*	1					
20	3817-401-001-00	NUT/M08	*	2					

FIG. 13 CAM SHAFT

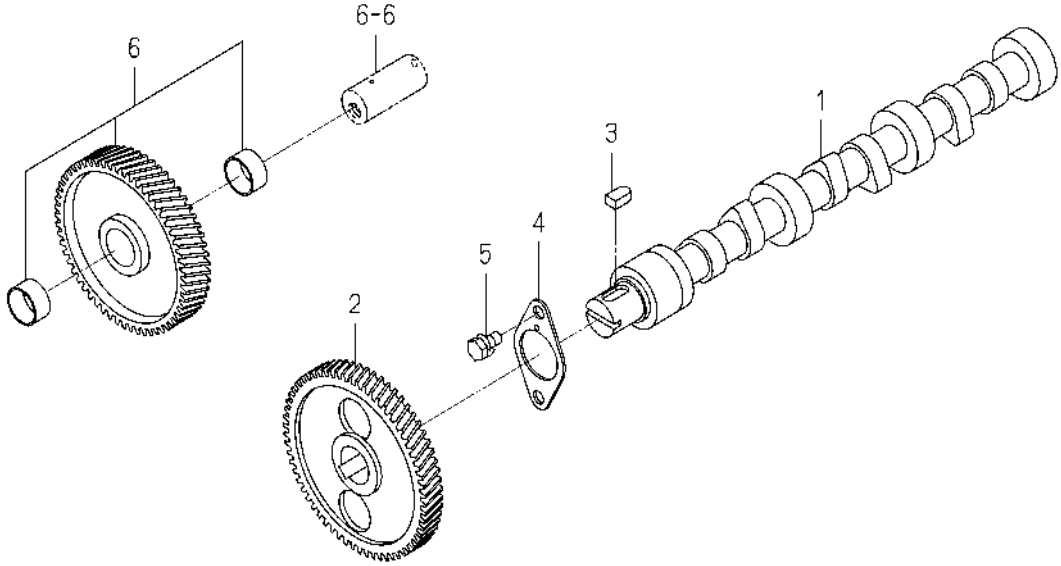

6003-310 -0100

KEY	PART CODE	DESCRIPTION	SPC	TYPE OF MODEL E3112 G08		ITC	COL	GRP	REMARKS
1	6212-511-002-00	SHAFT,CAM	*	1					
2	6212-522-010-00	GEAR/CAMSHAFT	*	1					
3	6209-730-005-00	KEY/07X05X09	*	1					
4	6212-535-014-00	PLATE/THRUST	*	1					
5	V210-560-601-20	BOLT,S/M6X12/7T	*	2					
6	6212-523-023-00	GEAR/IDLE ASSY	*	1					

FIG. 14 PISTON

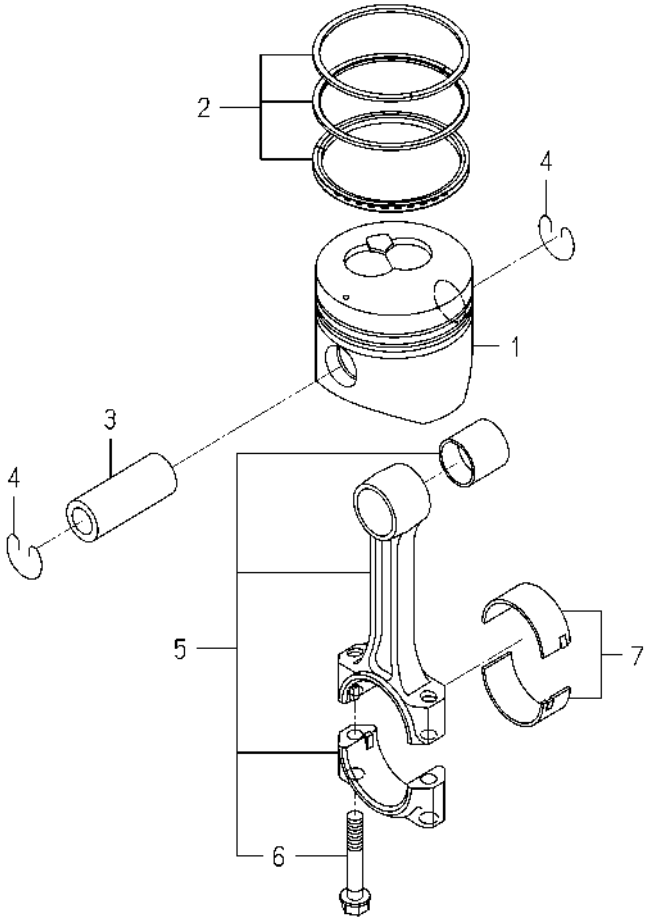

6004-340I-0100

KEY	PART CODE	DESCRIPTION	SPC	TYPE OF MODEL E3112 G08		ITC	COL	GRP	REMARKS
1	6212-111-094-20	PISTON	*	3					
2	6212-121-014-20	RING/PISTON SET	*	3					
3	6212-211-001-10	PIN,PISTON	*	3					
4	6209-587-001-00	RING,SNAP	*	6					
5	6212-230-004-10	CONNECTINGROD ASSY	*	3					
6	6212-235-005-00	BOLT/CONNECTINGROD	*	6					
7	6212-271-016-00	BEARING/CONNECTING R	*	3					

FIG. 15 PISTON/OVER SIZE (OPTION)

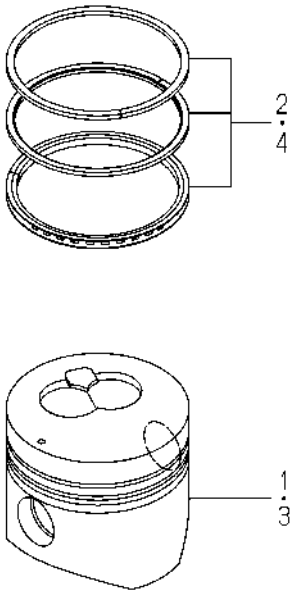

6004-349I-0100

KEY	PART CODE	DESCRIPTION	SPC	TYPE OF MODEL E3112 G08		ITC	COL	GRP	REMARKS
1	6212-114-094-20	PISTON(OV/050)	T	3					
2	6212-124-014-10	RINGPISTON/OV050 SET	T	3					
3	6212-116-094-20	PISTON(OV/100)	T	3					
4	6212-126-014-10	RINGPISTON/OV100 SET	T	3					

FIG. 16 CRANK SHAFT

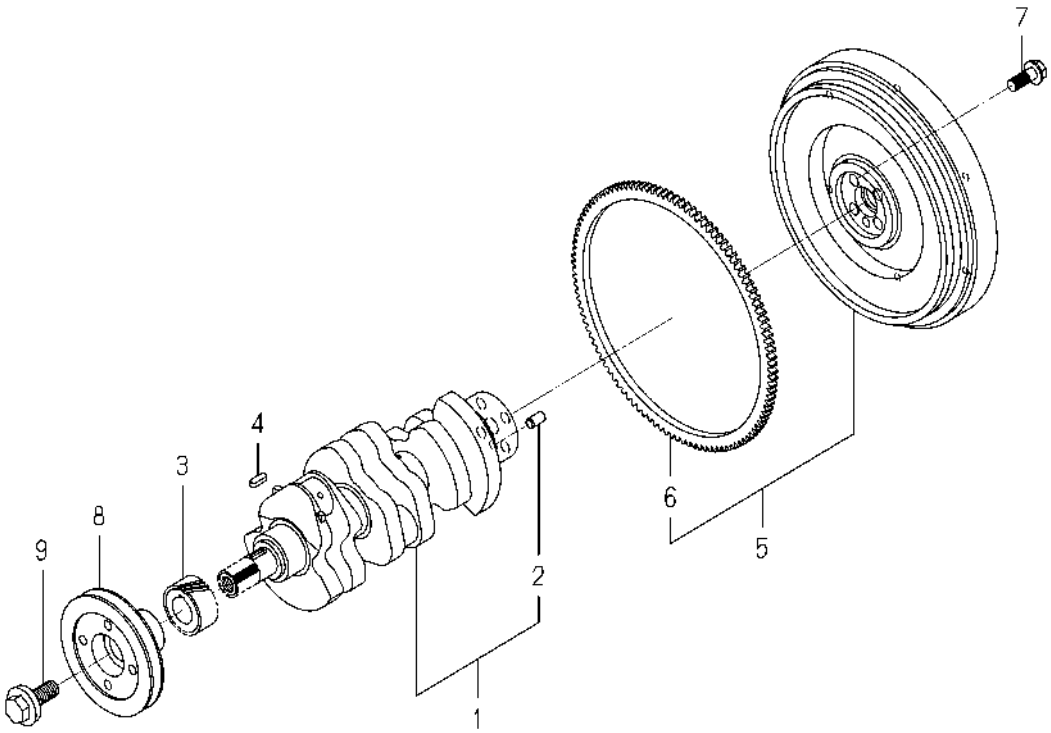

6004-351L-0100

KEY	PART CODE	DESCRIPTION	SPC	TYPE OF MODEL E3112 G08		ITC	COL	GRP	REMARKS
1	6212-310-019-60	CRANKSHAFT ASSY	*	1					
2	V523-101-001-80	PIN,ST,B/10X18	*	1					
3	6212-521-008-00	GEAR/CRANK	*	1					
4	6209-730-002-00	KEY/07X05X20	*	1					
5	6212-330-083-10	FLYWHEEL ASSY	*	1					
6	6212-333-009-00	RINGGEAR	*	1					
7	6209-046-015-00	BOLT/FLANGE	*	4					
8	6212-371-081-00	PULLEY/CRANK	*	1					
9	6209-000-043-00	BOLT/CRANK	*	1					

FIG. 17 OIL PUMP

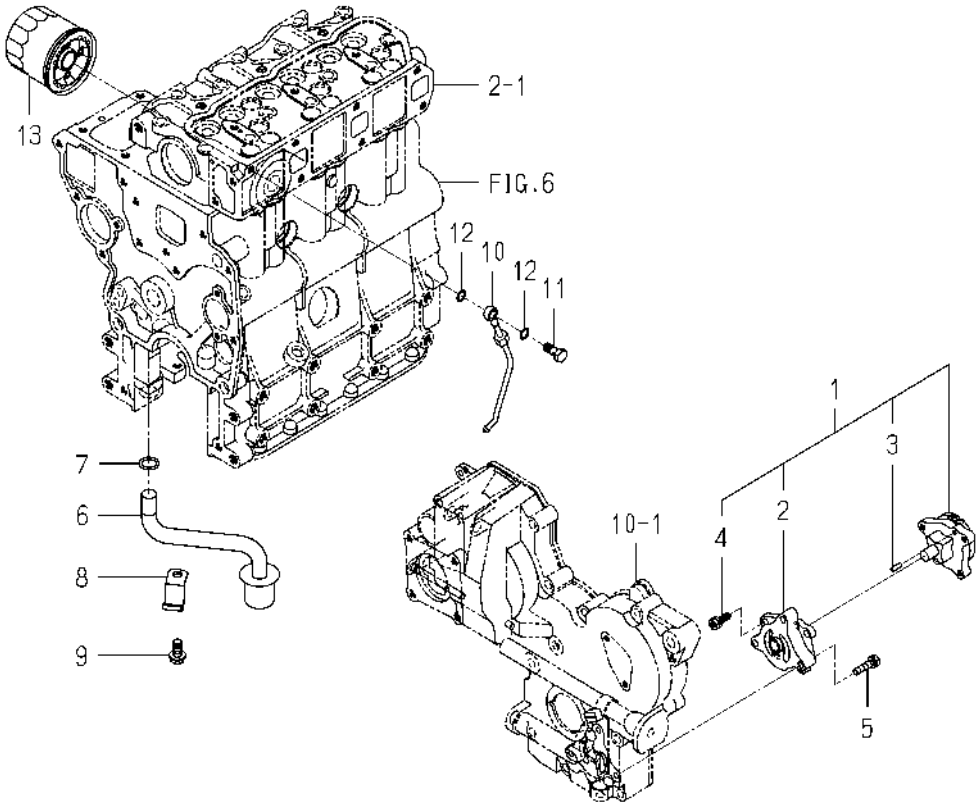

6004-401A-0100

KEY	PART CODE	DESCRIPTION	SPC	TYPE OF MODEL E3112 G08		ITC	COL	GRP	REMARKS
1	6213-100-003-30	OILPUMP ASSY	*	1					
2	6213-111-001-30	BODY/OILPUMP	*	1					
3	6213-129-003-00	PIN/STRAIGHT	*	2					
4	6213-119-001-00	BOLT/WS	*	3					
5	V210-560-602-50	BOLT,S/M6X25/7T	*	3					
6	6213-140-032-10	STRAINER	*	1					
7	V720-102-401-50	O-RING/1A,P15	*	1					
8	6213-149-001-00	CLAMP,STRAINER	*	1					
9	V231-360-801-60	FLANGEBOLT/M8X16	*	1					
10	6213-311-006-00	PIPE,OIL	*	1					
11	6909-906-105-10	BOLT,JOINT	*	1					
12	6209-920-002-00	PACKING	*	2					
13	6213-240-002-20	CARTRIDGE/OILFILTER	*	1					

FIG. 18 WATER PUMP

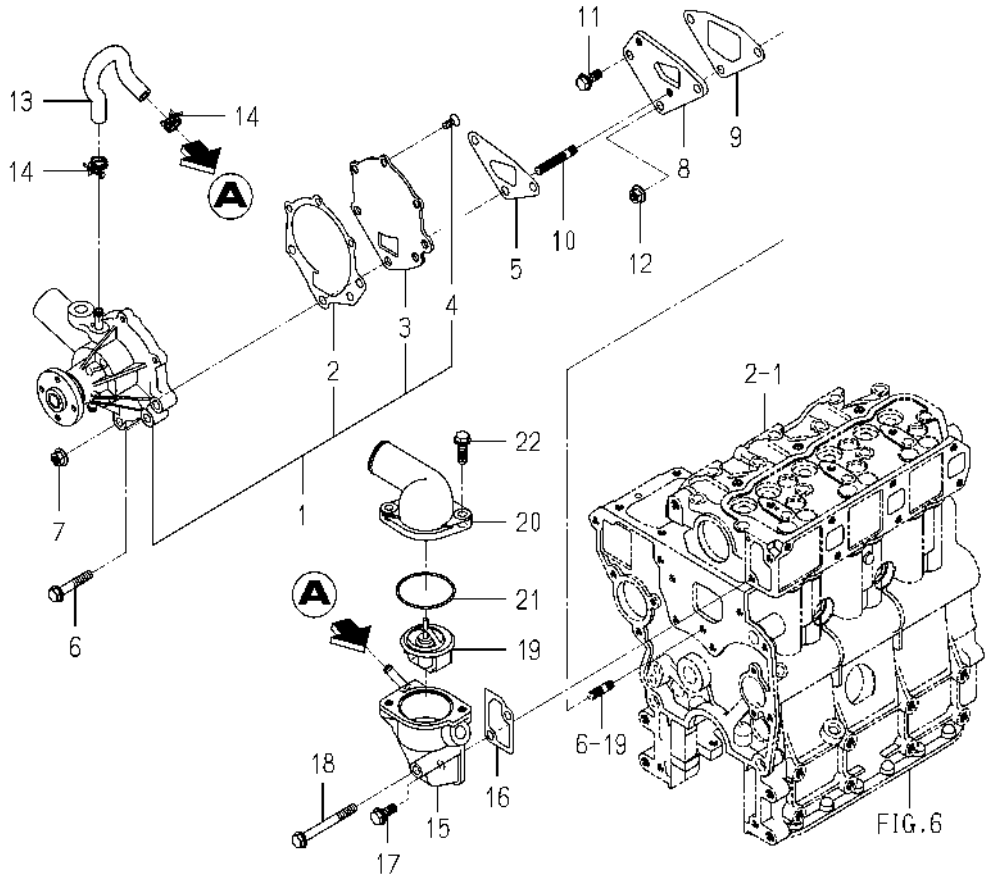

6004-420A-0100

KEY	PART CODE	DESCRIPTION	SPC	TYPE OF MODEL E3112 G08		ITC	COL	GRP	REMARKS
1	6213-610-005-50	WATERPUMP ASSY	*	1					
2	6213-613-002-10	GASKET	*	1					
3	6213-612-004-00	PLATE/WATER PUMP	*	1					
4	6213-619-003-00	SCREW/WATER PUMP	*	3					
5	6213-614-018-00	GASKET/WATERPUMP	*	1					
6	V231-360-804-50	FLANGEBOLT/M8X45	*	1					
7	3817-401-001-00	NUT/M08	*	2					
8	6213-619-001-00	SPACER,PUMP.WATER	*	1					
9	6213-614-019-00	GASKET/SPACER	*	1					
10	6904-110-840-00	STUD/M8X40	*	2					
11	V231-360-802-00	FLANGEBOLT/M8X20	*	1					
12	3817-401-001-00	NUT/M08	*	1					
13	6213-729-013-10	HOSE/RUBBER	*	1					
14	J061-210-015-00	CLAMP/WIRE/10-15	*	2					
15	6213-716-001-60	HOUSING/THERMOSTAT	*	1					
16	6213-743-002-10	GASKET/HOUSING	*	1					
17	V231-360-802-00	FLANGEBOLT/M8X20	*	1					
18	V231-360-807-50	FLANGEBOLT/M8X75	*	1					
19	6513-770-022-10	THERMOSTAT	*	1					
20	6213-711-004-00	PIPE/WATEROUTLET	*	1					
21	V723-102-005-50	O-RING/1A,S55	*	1					
22	V231-360-802-50	FLANGEBOLT/M8X25	*	2					

FIG. 19 COOLING FAN

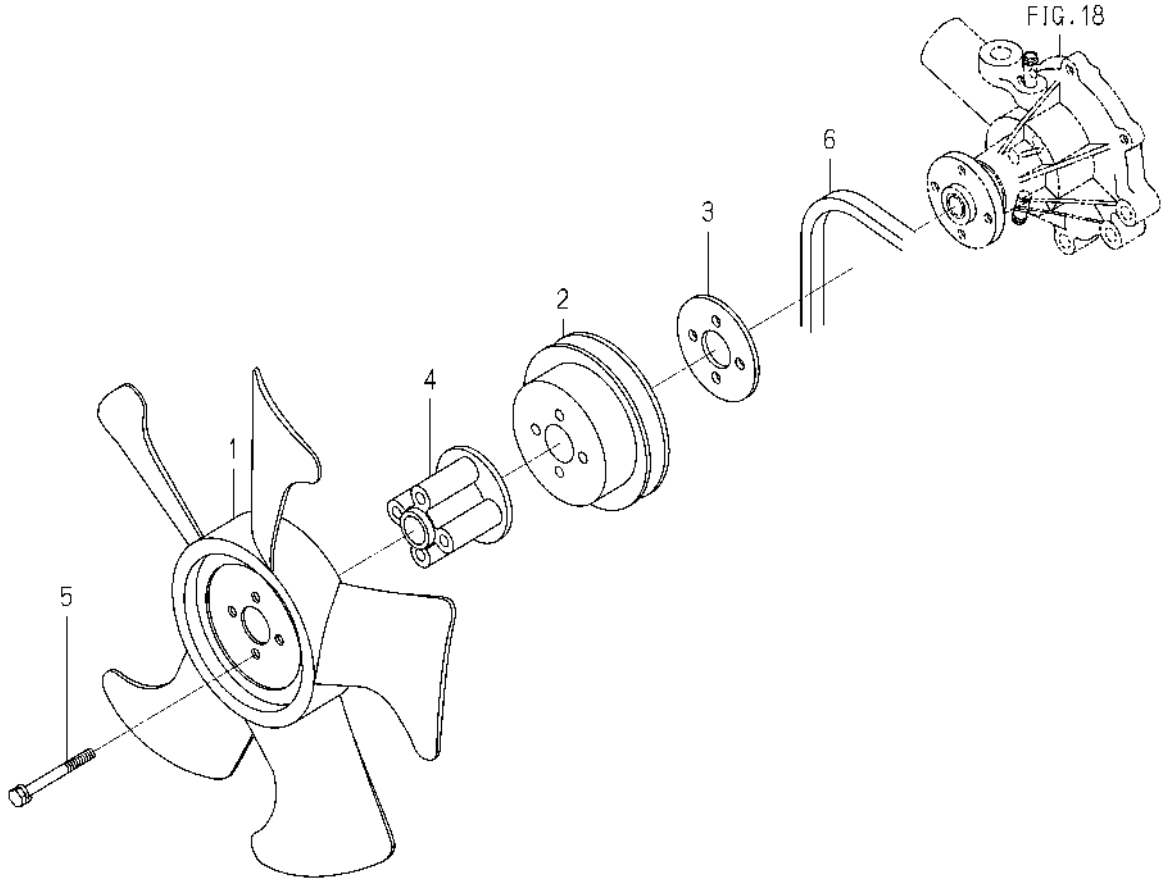

6004-480U-0100

KEY	PART CODE	DESCRIPTION	SPC	TYPE OF MODEL E3112 G08		ITC	COL	GRP	REMARKS
1	6213-660-023-00	FAN/COOLING	*	1					
2	6213-641-022-20	PULLEY/WATERPUMP	*	1					
3	6213-669-022-00	SPACER/FAN	*	1					
4	6213-669-008-00	SPACER/FAN/48	*	1					
5	6209-030-044-00	BOLT/WS	*	4					
6	6213-671-054-00	BELT/VNR5A36.5	*	1					

FIG. 20 INJECTION NOZZLE

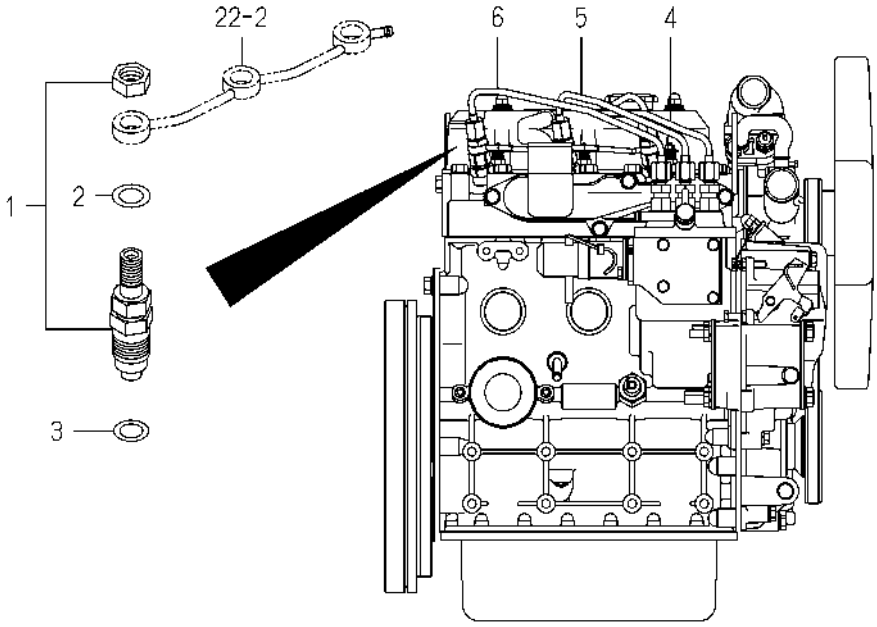

6004-501C-0100

KEY	PART CODE	DESCRIPTION	SPC	TYPE OF MODEL E3112 G08		ITC	COL	GRP	REMARKS
1	6215-300-036-10	INJECTIONNOZZLE ASSY	*	3					FIG 028
2	6215-359-001-00	WASHER	*	3					
3	6215-315-002-00	GASKET,NOZZLE	*	3					
4	6215-411-126-10	PIPE/INJECTION ASSY	*	1					
5	6215-411-127-00	PIPE/INJECTION ASSY	*	1					
6	6215-411-128-00	PIPE/INJECTION ASSY	*	1					

FIG. 21 INJECTION PUMP

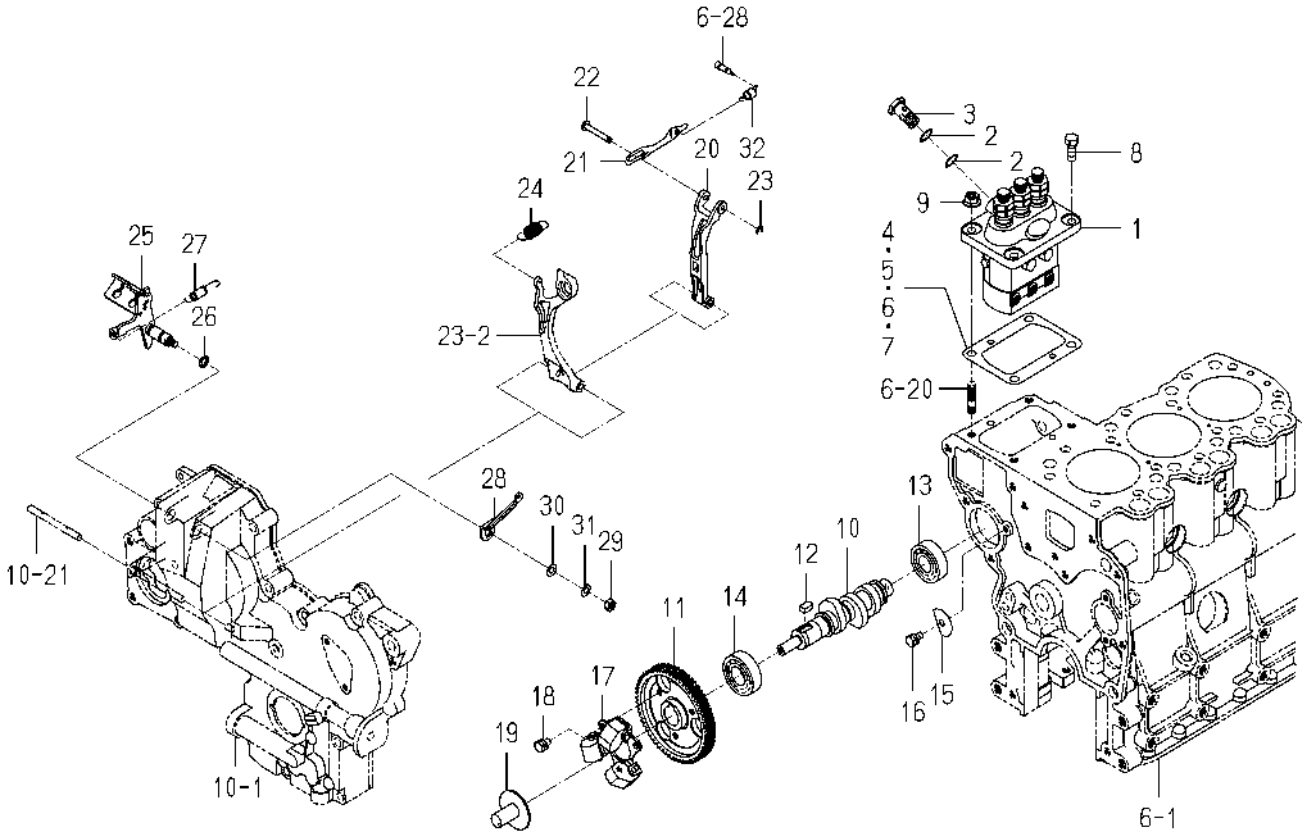

6004-511D-0100

KEY	PART CODE	DESCRIPTION	SPC	TYPE OF MODEL E3112 G08		ITC	COL	GRP	REMARKS
1	6215-600-103-30	INJECTIONPUMP ASSY	*	1					FIG 029
2	6215-619-010-00	WASHER/AIR BLEEDER	*	2					
3	6215-619-009-00	SCREW/HOLLOW	*	1					
4	6219-752-045-00	SHIM/INJECTIONPUMP	*	1					
5	6219-752-044-00	SHIM/INJECTIONPUMP	*	1					
6	6219-752-046-00	SHIM/INJECTIONPUMP	*	1					
7	6219-752-047-00	SHIM/INJECTIONPUMP	*	1					
8	V201-360-802-00	BOLT/M8X20/7T	*	2					
9	3817-401-001-00	NUT/M08	*	2					
10	6215-621-016-30	CAMSHAFT/INJECTION P	*	1					
11	6212-524-002-40	GEAR/INJECTIONPUMP	*	1					
12	6209-730-005-00	KEY/07X05X09	*	1					
13	V600-110-620-30	BEARING,RB/6203	*	1					
14	1729-202-001-00	BEARING/BALL	*	1					
15	6212-535-010-10	PLATE/THRUST/INJECTI	*	1					
16	V210-560-601-20	BOLT,S/M6X12/7T	*	1					
17	6215-520-001-00	FLYWEIGHT	*	1					
18	6209-030-043-00	BOLT/M6X10	*	3					
19	6215-526-004-00	THRUSTPIECE	*	1					
20	6215-541-001-10	ARM/FLOATING COMP	*	1					
21	6215-543-002-10	RINK/CONTROL	*	1					
22	6215-542-006-00	PIN,CONTROL	*	1					
23	V710-140-004-00	RING,SNAP/4 E	*	1					
24	6215-531-023-00	SPRINNG/GOVERNOR	*	1					
25	6215-541-024-50	LEVER/CONTROL COMP	*	1					
26	V720-101-900-80	O-RING/1A,P8	*	1					
27	6209-580-002-10	SPRING,RETURN	*	1					
28	6215-549-007-10	ARM/CONTROL	*	1					
29	V301-260-006-00	NUT/M6	*	1					
30	V411-260-006-00	WASHER,PL/M6	*	1					

FIG. 21 INJECTION PUMP

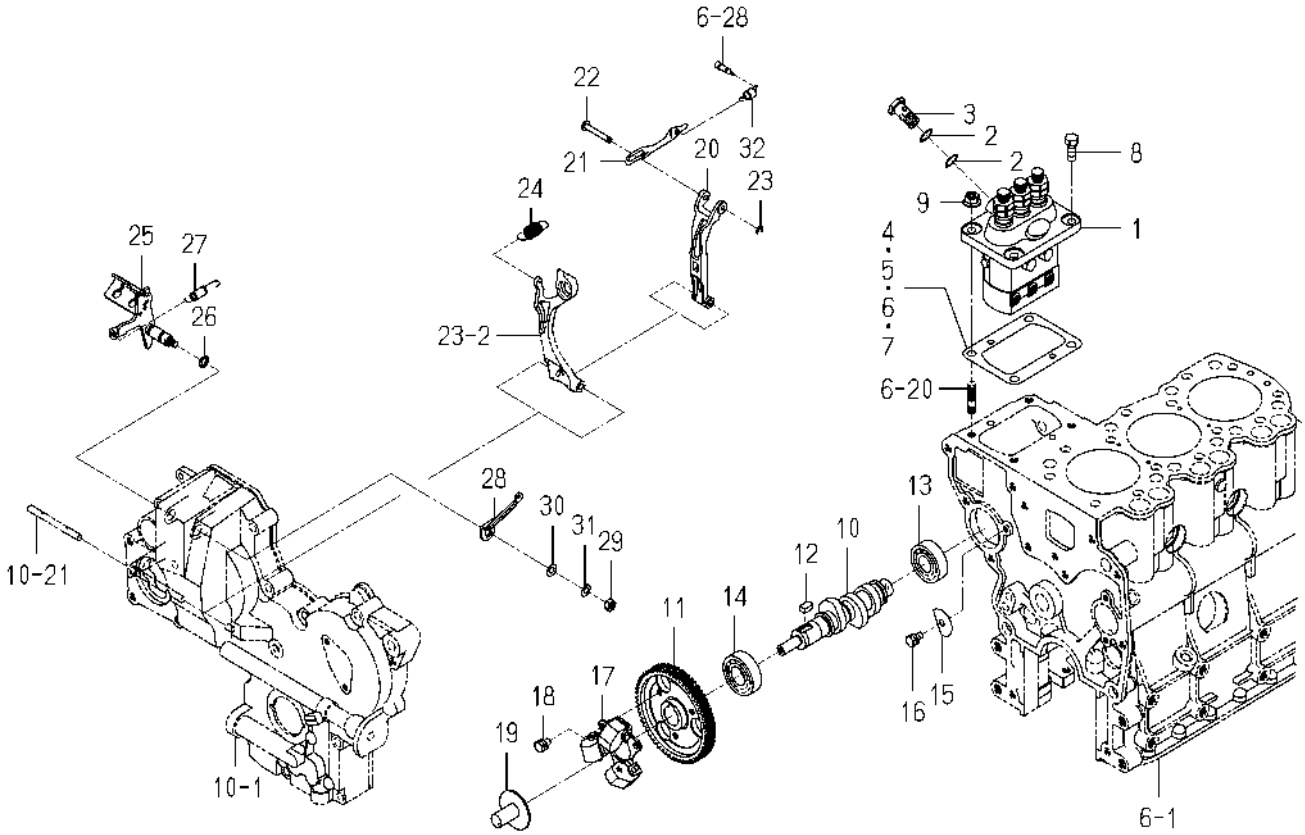

6004-511D-0100

KEY	PART CODE	DESCRIPTION	SPC	TYPE OF MODEL E3112 G08		ITC	COL	GRP	REMARKS
31	V401-160-006-00	WASHER,SP/M6	*	1					
32	6215-549-012-00	SPRING,STARTING	*	1					

FIG. 22 FUEL PIPE

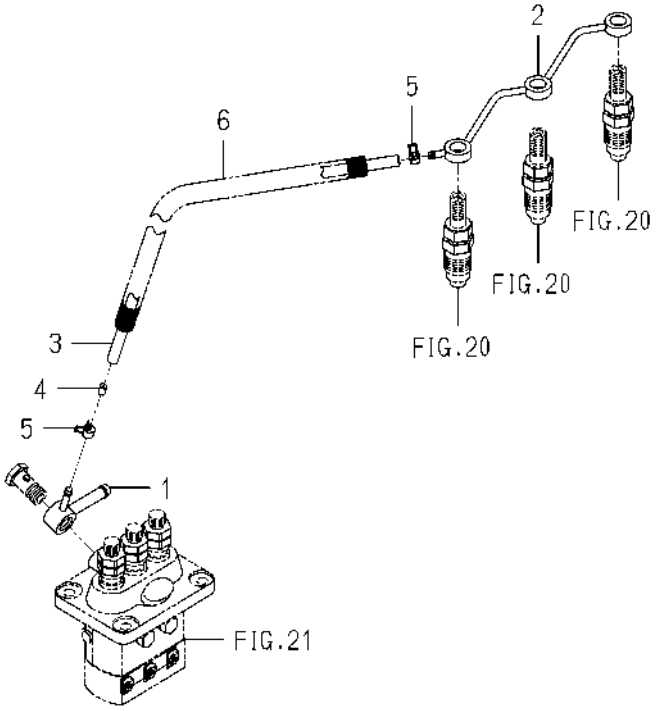

6004-550O-0100

KEY	PART CODE	DESCRIPTION	SPC	TYPE OF MODEL E3112 G08		ITC	COL	GRP	REMARKS
1	6215-412-004-00	CONNECTOR/FUEL	*	1					
2	6215-411-198-00	PIPE/FUEL	*	1					
3	6209-360-011-00	HOSE/RUBBER	*	1					
4	3640-586-004-00	RESISTANCE/1.0	*	1					
5	J062-076-082-00	CLIP/HOSE/7.6-8.2	*	2					
6	6209-360-143-00	CORRUGATEDTUBE	*	1					

FIG. 23 ADAPTER

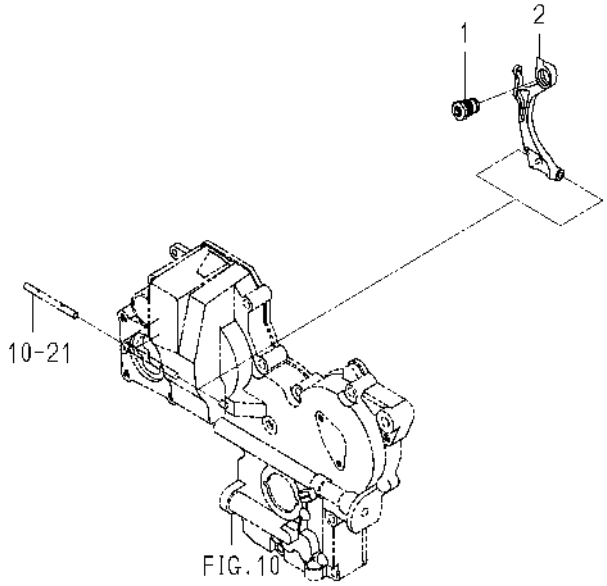

6005-560 -0100

KEY	PART CODE	DESCRIPTION	SPC	TYPE OF MODEL E3112 G08		ITC	COL	GRP	REMARKS
1	6215-548-029-20	ADAPTER/255X065 ASSY	*	1					
2	6215-541-016-40	ARM/TENSION	*	1					

FIG. 24 ELECTRIC (1)

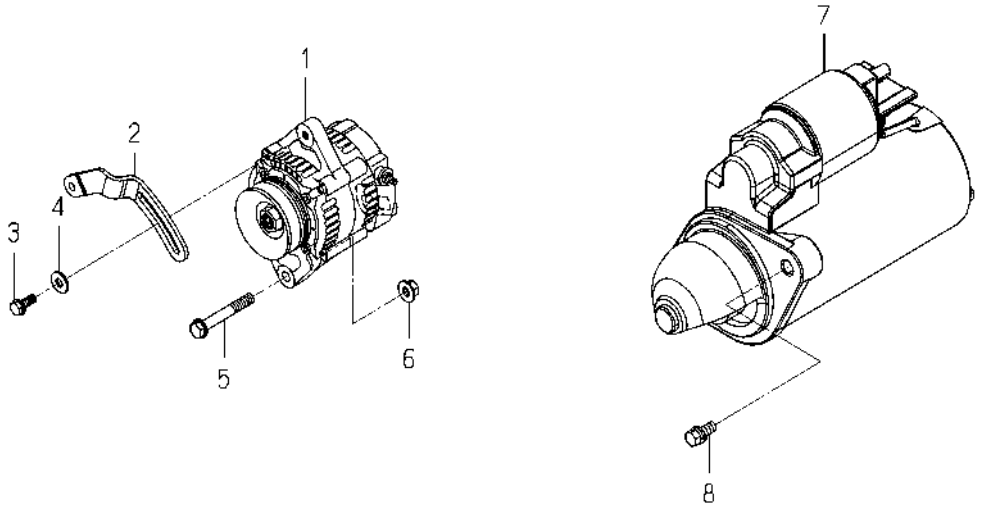

6004-801V-0100,6004-801V-0200

KEY	PART CODE	DESCRIPTION	SPC	TYPE OF MODEL E3112 G08		ITC	COL	GRP	REMARKS
1	6281-200-015-00	GENERATOR ASSY	*	1					FIG 030
2	6213-674-046-00	PLATE/ADJUST	*	1					
3	V231-360-802-00	FLANGEBOLT/M8X20	*	1					
4	1373-121-001-00	WASHER/9X22X2	*	1					
5	V233-361-007-00	FLANGEBOLT/M10X70	*	1					
6	6209-440-007-00	NUT/FLANGE/M10	*	1					
7	6281-100-023-00	STARTER ASSY	*	1					
8	6901-911-025-00	BOLT,SEMS/M10X25,7T	*	2					

FIG. 25 ELECTRIC (2)

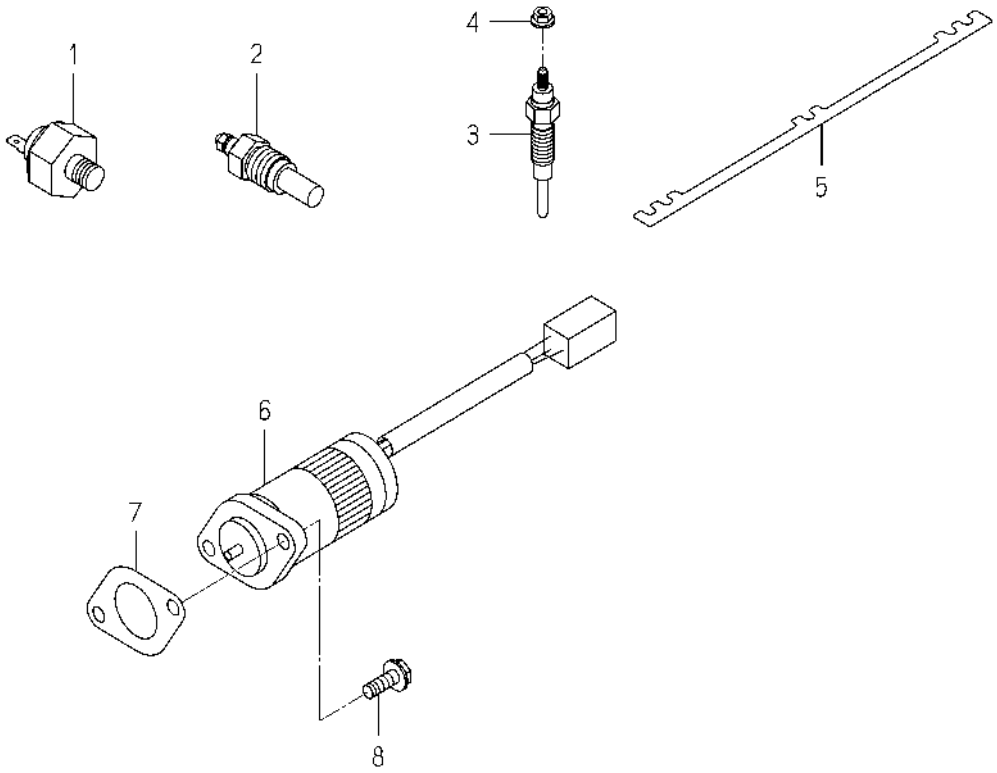

6004-821E-0100,6004-821E-0200

KEY	PART CODE	DESCRIPTION	SPC	TYPE OF MODEL E3112 G08		ITC	COL	GRP	REMARKS
1	6281-971-001-10	SWITCH/OILPRESSURE	*	1					
2	6282-450-011-00	THERMOMETER	*	1					
3	6281-410-023-10	GLOWPLUG	*	3					
4	6209-440-005-00	NUT/FLANGE	*	3					
5	6219-732-017-00	CONNECTOR/GLOWPLUG	*	1					
6	6281-910-013-00	SOLENOID	*	1					
7	6209-630-002-10	GASKET	*	1					
8	V230-360-601-60	FLANGEBOLT/M6X16	*	2					

FIG. 26 REPAIR PARTS(OPTION)

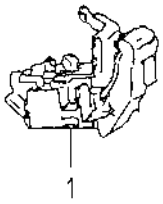

6005-998D-0100

KEY	PART CODE	DESCRIPTION	SPC	TYPE OF MODEL E3112 G08		ITC	COL	GRP	REMARKS
1	6281-271-003-00	REGULATOR ASSY	T	1					

FIG. 27 REPAIR PARTS(OPTION)

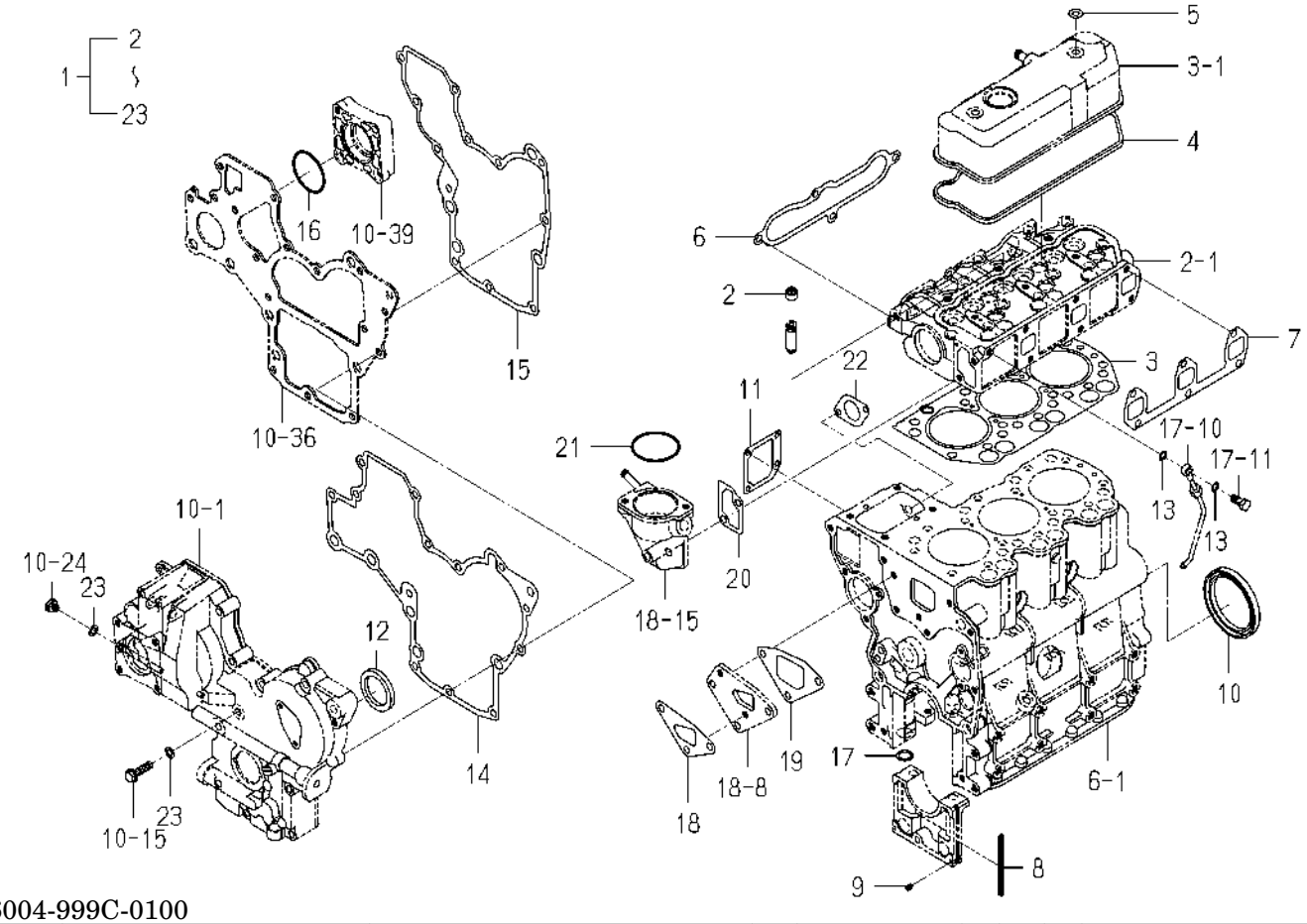

6004-999C-0100

KEY	PART CODE	DESCRIPTION	SPC	TYPE OF MODEL E3112 G08		ITC	COL	GRP	REMARKS
1	6287-810-015-30	REPAIR/ENGINE SET	T	1					
2	6212-569-002-00	SEAL,OIL	T	6					
3	6211-141-029-20	GASKET/CYLINDERHEAD	T	1					
4	6211-173-003-00	SEAL,CYL.HEAD COVER	T	1					
5	6209-572-003-00	GASKET	T	2					
6	6214-115-001-20	GASKET,INLET MANIFOL	T	1					
7	6214-145-001-30	GASKET,EXH.MANIFOLD	T	1					
8	6211-258-001-00	SEAL,BEARING CAP	T	4					
9	6211-258-002-00	SEAL,BEARING CAP/7	T	2					
10	6209-625-001-00	SEAL,OIL	T	1					
11	6211-292-001-20	GASKET/COVER	T	1					
12	6209-625-002-00	SEAL,OIL	T	1					
13	6209-920-002-00	PACKING	T	2					
14	6211-312-003-20	GASKET/GEARCASE	T	1					
15	6211-312-004-20	GASKET/PLATE	T	1					
16	V723-102-005-00	O-RING/1A,S50	T	1					
17	V720-102-401-50	O-RING/1A,P15	T	1					
18	6213-614-018-00	GASKET/WATERPUMP	T	1					
19	6213-614-019-00	GASKET/SPACER	T	1					
20	6213-743-002-10	GASKET/HOUSING	T	1					
21	V723-102-005-50	O-RING/1A,S55	T	1					
22	6209-630-002-10	GASKET	T	1					
23	6209-500-003-00	WASHER/08X14X01	T	2					

FIG. 28 COMPONENT PARTS FOR 6215-300-036-10 ON Fig.20

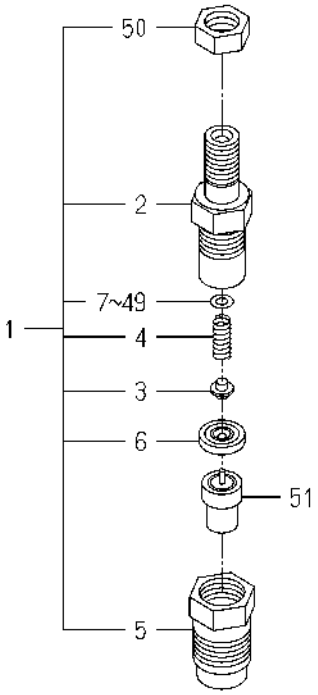

6215-300-036-1B

KEY	PART CODE	DESCRIPTION	SPC	TYPE OF MODEL E3112 G08		ITC	COL	GRP	REMARKS
1	6215-330-024-10	HOLDER/NOZZLE ASSY	*	3					
2	6215-331-008-00	BODY/NOZZLE HOLDER	*	3					
3	6215-342-001-00	PIN,NOZZLE HOLDER	*	3					
4	6215-343-001-00	SPRING/NOZZLEHOLDER	*	3					
5	6215-332-013-00	NUT/NOZZLERETAINING	*	3					
6	6215-339-001-00	PIECE,DISTANCE	*	3					
7	6215-345-001-00	WASHER/0.9	*	3					
8	6215-345-002-00	WASHER/0.925	*	3					
9	6215-345-003-00	WASHER/0.95	*	3					
10	6215-345-004-00	WASHER/0.975	*	3					
11	6215-345-005-00	WASHER/1.0	*	3					
12	6215-345-006-00	WASHER/1.025	*	3					
13	6215-345-007-00	WASHER/1.05	*	3					
14	6215-345-008-00	WASHER/1.075	*	3					
15	6215-345-009-00	WASHER/1.1	*	3					
16	6215-345-010-00	WASHER/1.125	*	3					
17	6215-345-011-00	WASHER/1.15	*	3					
18	6215-345-012-00	WASHER/1.175	*	3					
19	6215-345-013-00	WASHER/1.2	*	3					
20	6215-345-014-00	WASHER/1.225	*	3					
21	6215-345-015-00	WASHER/1.25	*	3					
22	6215-345-016-00	WASHER/1.275	*	3					
23	6215-345-017-00	WASHER/1.3	*	3					
24	6215-345-018-00	WASHER/1.325	*	3					
25	6215-345-019-00	WASHER/1.35	*	3					
26	6215-345-020-00	WASHER/1.375	*	3					
27	6215-345-021-00	WASHER/1.4	*	3					
28	6215-345-022-00	WASHER/1.425	*	3					
29	6215-345-023-00	WASHER/1.45	*	3					
30	6215-345-024-00	WASHER/1.475	*	3					

FIG. 28 COMPONENT PARTS FOR 6215-300-036-10 ON Fig.20

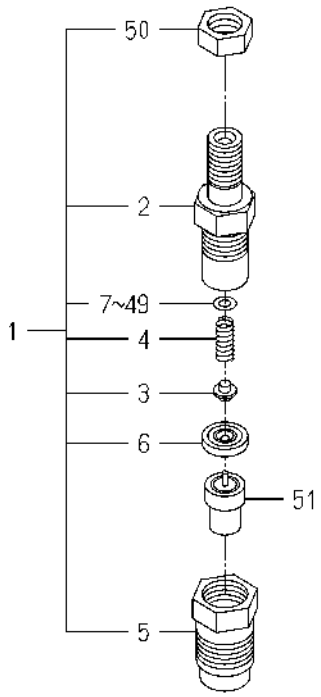

6215-300-036-1B

KEY	PART CODE	DESCRIPTION	SPC	TYPE OF MODEL E3112 G08		ITC	COL	GRP	REMARKS
31	6215-345-025-00	WASHER/1.5	*	3					
32	6215-345-026-00	WASHER/1.525	*	3					
33	6215-345-027-00	WASHER/1.55	*	3					
34	6215-345-028-00	WASHER/1.575	*	3					
35	6215-345-029-00	WASHER/1.6	*	3					
36	6215-345-030-00	WASHER/1.625	*	3					
37	6215-345-031-00	WASHER/1.65	*	3					
38	6215-345-032-00	WASHER/1.675	*	3					
39	6215-345-033-00	WASHER/1.7	*	3					
40	6215-345-034-00	WASHER/1.725	*	3					
41	6215-345-035-00	WASHER/1.75	*	3					
42	6215-345-036-00	WASHER/1.775	*	3					
43	6215-345-037-00	WASHER/1.8	*	3					
44	6215-345-038-00	WASHER/1.825	*	3					
45	6215-345-039-00	WASHER/1.85	*	3					
46	6215-345-040-00	WASHER/1.875	*	3					
47	6215-345-041-00	WASHER/1.9	*	3					
48	6215-345-042-00	WASHER/1.925	*	3					
49	6215-345-043-00	WASHER/1.95	*	3					
50	6215-359-002-00	NUT	*	3					
51	6215-311-027-00	NOZZLE ASSY	*	3					

FIG. 29 COMPONENT PARTS FOR 6215-600-103-30 ON Fig.21

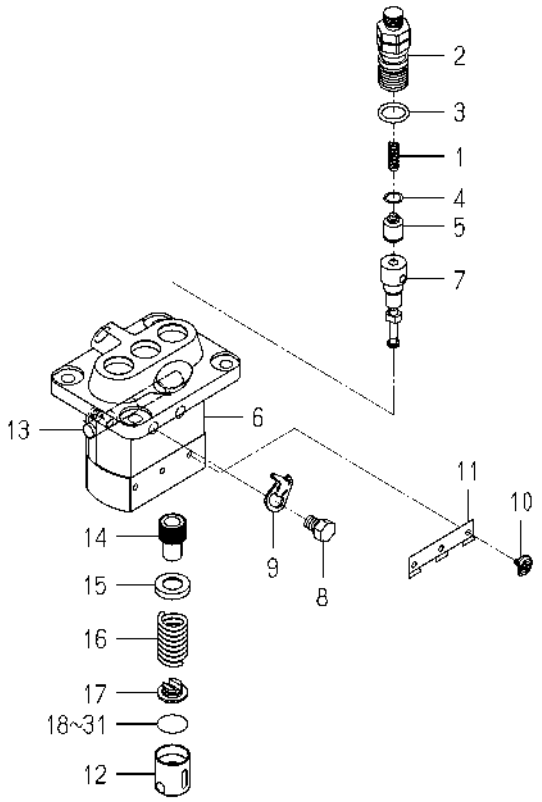

6215-600-103-3J

KEY	PART CODE	DESCRIPTION	SPC	TYPE OF MODEL E3112 G08		ITC	COL	GRP	REMARKS
1	6215-643-006-00	SPRING/DELIVERYVALVE	*	3					
2	6215-644-007-00	HOLDER/DELIVERYVALVE	*	3					
3	6215-649-019-00	ORING	*	3					
4	6215-649-002-00	GASKET/DELIVERYVALVE	*	3					
5	6215-641-006-00	VALVE ASSY	*	3					
6	6215-611-001-00	HOUSING ASSY	*	1					
7	6215-631-019-00	ELEMENT ASSY	*	3					
8	6215-619-022-00	BOLT/WASHERHEAD	*	2					
9	6215-612-001-00	PLATE/ADJUSTING	*	2					
10	6215-629-001-00	PIN/INJECTIONPUMP	*	3					
11	6215-629-002-00	PLATE	*	1					
12	6215-622-001-00	TAPPET/INJECTIO ASSY	*	3					
13	6215-637-001-00	RACK/CONTROL ASSY	*	1					
14	6215-635-001-00	SLEEVE/PLUNGER	*	3					
15	6215-639-004-00	SEAT/SPRING/UPPER	*	3					
16	6215-634-001-00	SPRING/PUMPPLUNGER	*	3					
17	6215-639-005-00	SEAT/SPRING/LOWER	*	3					
18	6215-629-003-00	PLATE/TAPPET/AD 0.6	*	1					
19	6215-629-004-00	PLATE/TAPPET/AD 0.7	*	1					
20	6215-629-005-00	PLATE/TAPPET/AD 0.8	*	1					
21	6215-629-006-00	PLATE/TAPPET/AD 0.9	*	1					
22	6215-629-007-00	PLATE/TAPPET/AD 1.0	*	1					
23	6215-629-008-00	PLATE/TAPPET/AD 0.2	*	1					
24	6215-629-009-00	PLATE/TAPPET/AD 0.3	*	1					
25	6215-629-010-00	PLATE/TAPPET/AD 0.4	*	1					
26	6215-629-011-00	PLATE/TAPPET/AD 0.5	*	3					
27	6215-629-012-00	PLATE/TAPPET/AD 0.25	*	1					
28	6215-629-013-00	PLATE/TAPPET/AD 0.35	*	1					
29	6215-629-014-00	PLATE/TAPPET/AD 0.45	*	1					
30	6215-629-015-00	PLATE/TAPPET/AD 0.55	*	1					

FIG. 29 COMPONENT PARTS FOR 6215-600-103-30 ON Fig.21

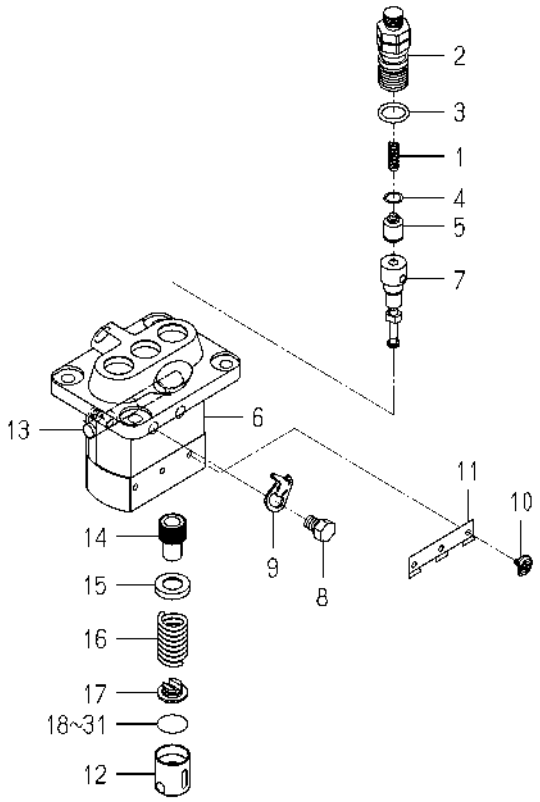

6215-600-103-3J

KEY	PART CODE	DESCRIPTION	SPC	TYPE OF MODEL E3112 G08		ITC	COL	GRP	REMARKS
31	6215-629-016-00	PLATE/TAPPET/AD 0.65	*	1					

FIG. 30 COMPONENT PARTS FOR 6281-200-015-00 ON Fig.24

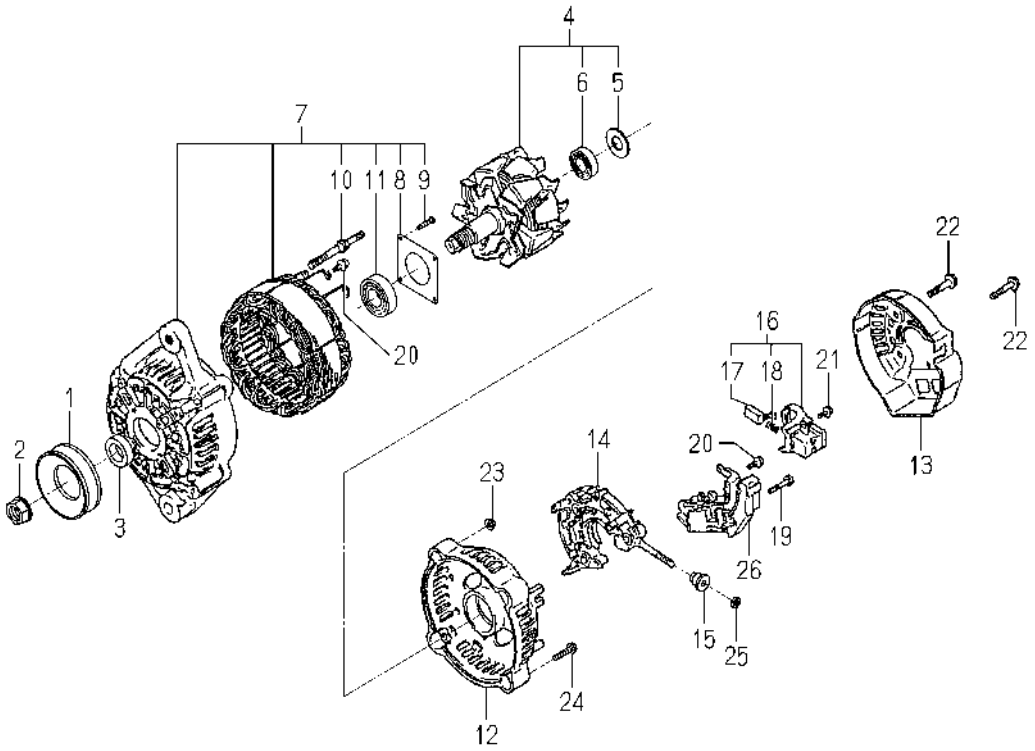

6281-200-015-0C

KEY	PART CODE	DESCRIPTION	SPC	TYPE OF MODEL E3112 G08		ITC	COL	GRP	REMARKS
1	6281-222-002-00	PULLEY	*	1					
2	6281-229-002-00	NUT	*	1					
3	6281-229-003-00	COLLOR	*	1					
4	6281-221-004-00	ROTOR ASSY	*	1					
5	6281-229-004-00	COVER,BEARING	*	1					
6	6281-229-032-00	BEARING/BALL	*	1					
7	6281-213-013-00	FRAME/DRIVEEND ASSY	*	1					
8	6281-229-006-00	PLATE	*	1					
9	6281-229-007-00	BOLT	*	4					
10	6281-229-008-00	BOLT	*	2					
11	6281-229-033-00	BEARING/BALL	*	1					
12	6281-214-007-00	FRAME/END/REAR	*	1					
13	6281-214-008-00	COVER/END/REAR	*	1					
14	6281-229-040-00	HOLDER/RECTIFIE ASSY	*	1					
15	6281-229-011-00	BUSH	*	1					
16	6281-217-002-00	HOLDER/BRUSH ASSY	*	1					
17	6281-215-001-00	BRUSH	*	2					
18	6281-216-001-00	SPRING	*	2					
19	6281-229-012-00	BOLT	*	2					
20	6281-229-013-00	BOLT	*	6					
21	6281-229-014-00	BOLT	*	1					
22	6281-229-015-00	BOLT	*	3					
23	6281-229-016-00	NUT	*	2					
24	6281-229-017-00	BOLT	*	2					
25	6281-229-018-00	NUT	*	1					
26	6281-271-008-00	REGULATOR ASSY	*	1					

E N G I N E

E3CDVG04···SF235F

6005-097-245-00

FIG. 1 SHORT BLOCK ENGIASSY

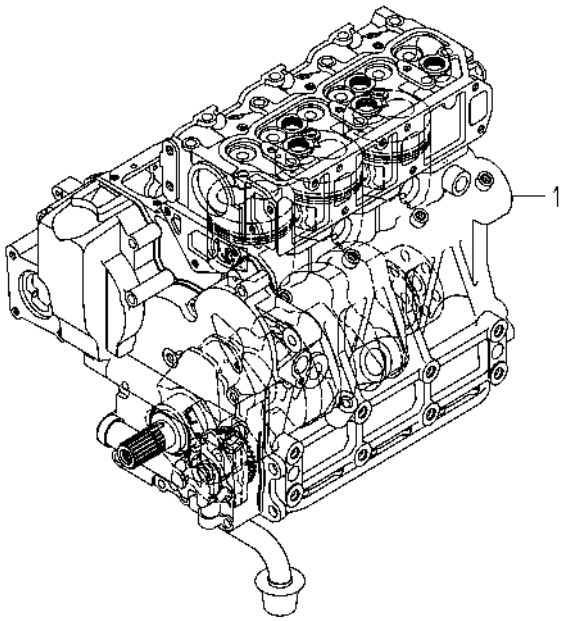

6005-020C-0100

KEY	PART CODE	DESCRIPTION	SPC	TYPE OF MODEL		ITC	COL	GRP	REMARKS
				E3CD VG04					
1	6005-010-285-00	SHORTBLOCKENGIN ASSY	T	1					

FIG. 2 CYLINDER HEAD

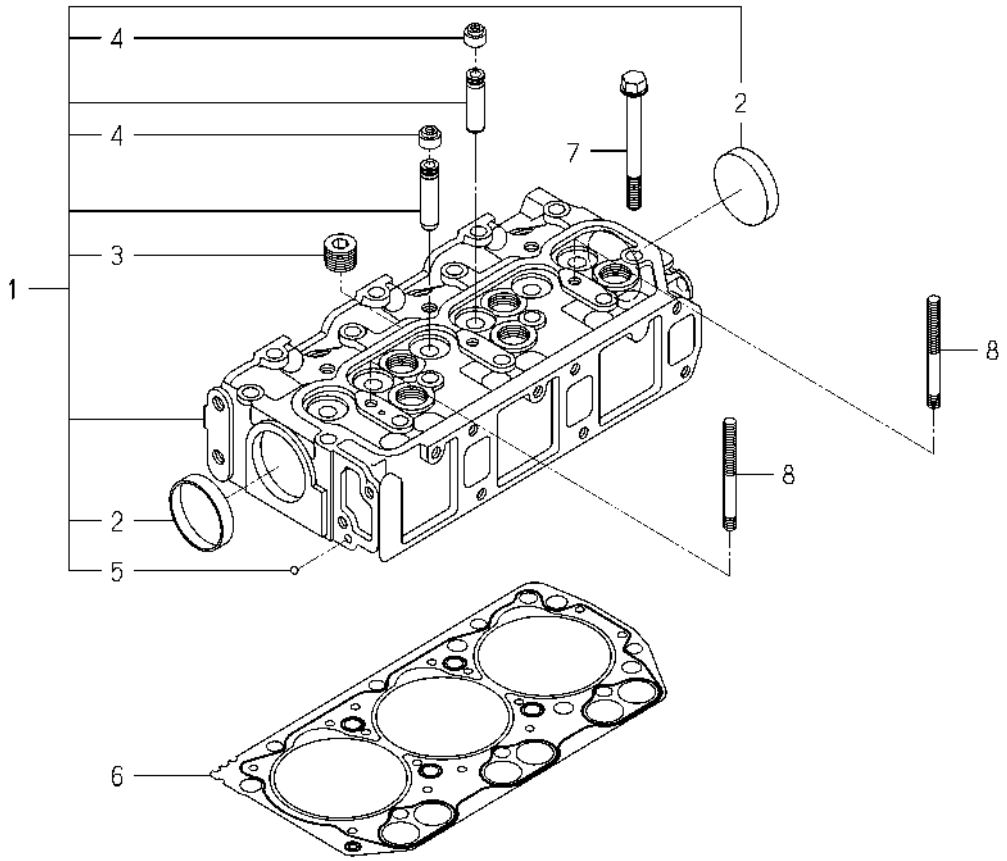

6005-101S-0100,6005-101S-0200

KEY	PART CODE	DESCRIPTION	SPC	TYPE OF MODEL E3CD VG04		ITC	COL	GRP	REMARKS
1	6211-110-084-40	CYLINDERHEAD ASSY	*	1					
2	6209-610-003-00	CUP/SEALING/50	*	2					
3	6209-605-004-10	PLUG/PT1/2	*	5					
4	6212-569-002-00	SEAL,OIL	*	6					
5	V682-200-000-60	BALL,STEEL	*	1					
6	6211-141-057-10	GASKET/CYLINDERHEAD	*	1					
7	6209-000-005-00	BOLT	*	14					
8	6209-300-014-00	STUD	*	2					

FIG. 3 CYLINDER HEAD COVER

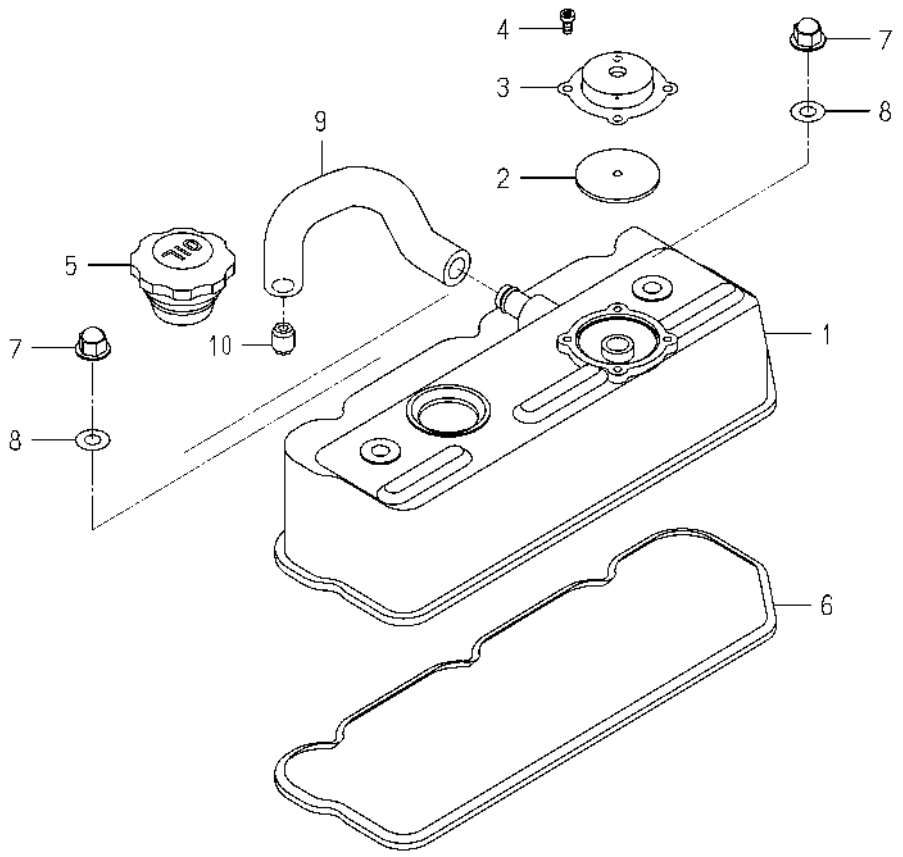

6008-110H-0100

KEY	PART CODE	DESCRIPTION	SPC	TYPE OF MODEL E3CD VG04		ITC	COL	GRP	REMARKS
1	6211-170-007-30	COVER/CYLINDER HEAD	*	1					
2	6211-179-011-20	RUBBERFLANGE	*	1					
3	6211-291-010-00	COVER/BLOWBY	*	1					
4	V195-164-008-30	SCREW/TAPPING	*	4					
5	6211-751-001-10	CAP,OIL FILLER	*	1					
6	6211-173-005-00	SEAL/CYL HEAD/UNDER	*	1					
7	6209-490-002-10	NUT/CAP	*	2					
8	6209-572-003-00	GASKET	*	2					
9	6209-360-109-10	HOSE/RUBBER	*	1					
10	6213-721-023-00	ORIFICE	*	1					

FIG. 4 INLET MANIFOLD

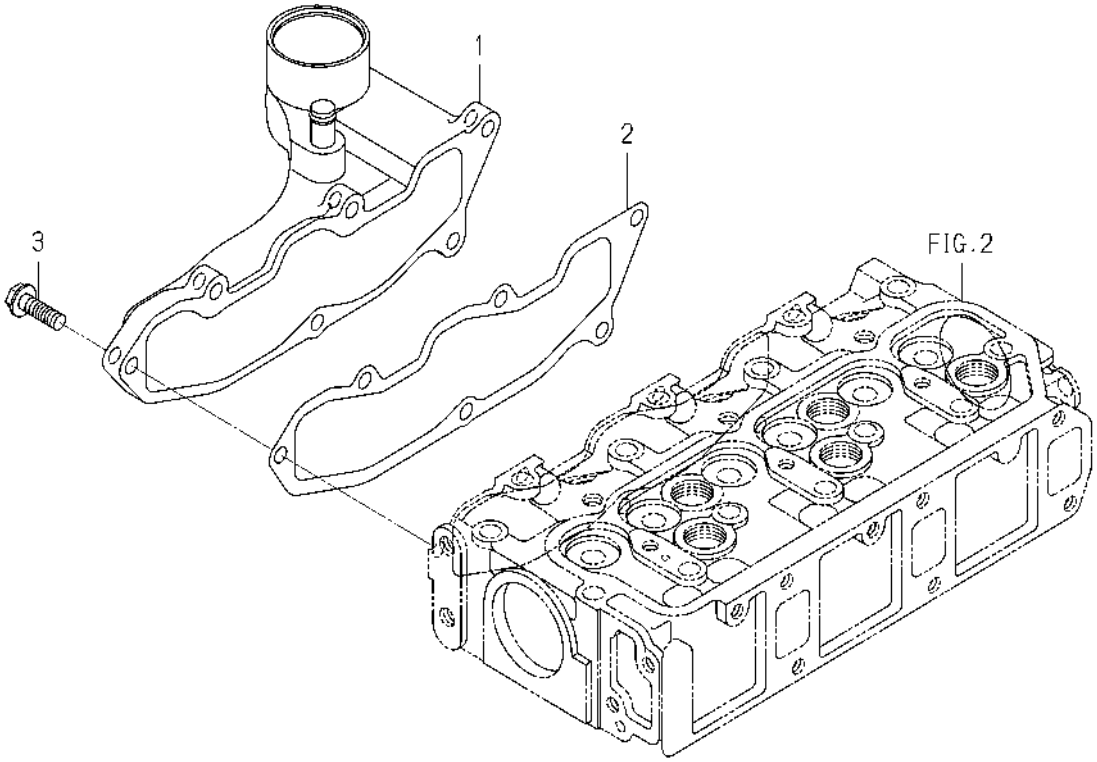

6005-120 -0100

KEY	PART CODE	DESCRIPTION	SPC	TYPE OF MODEL E3CD VG04		ITC	COL	GRP	REMARKS
1	6214-110-003-00	MANIFOLD/INLET ASSY	*	1					
2	6214-115-003-10	GASKET/INLETMANIFOLD	*	1					
3	V231-360-802-50	FLANGEBOLT/M8X25	*	6					

FIG. 5 EXHAUST MANIFOLD

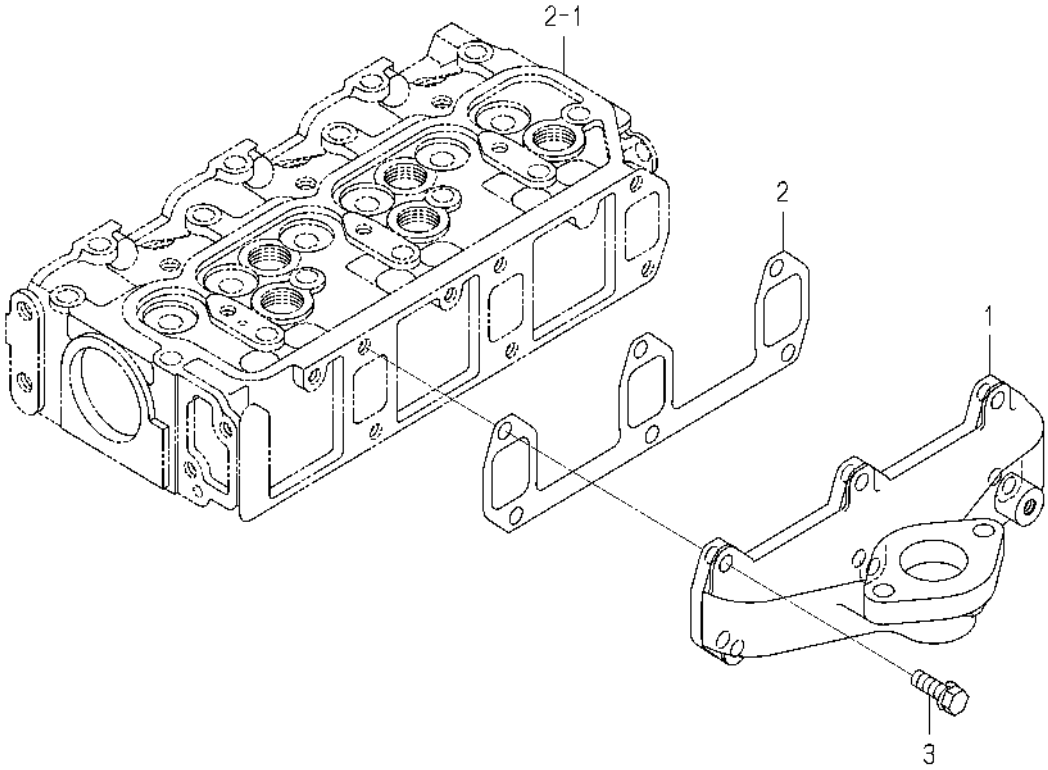

6005-140 -0100

KEY	PART CODE	DESCRIPTION	SPC	TYPE OF MODEL E3CD VG04		ITC	COL	GRP	REMARKS
1	6214-141-023-00	MANIFOLD/EXHAUST	*	1					
2	6214-145-004-20	GASKET/EXH MANIFOLD	*	1					
3	V211-560-802-50	BOLT,S/M8X25/7T	*	6					

FIG. 6 CYLINDER BLOCK

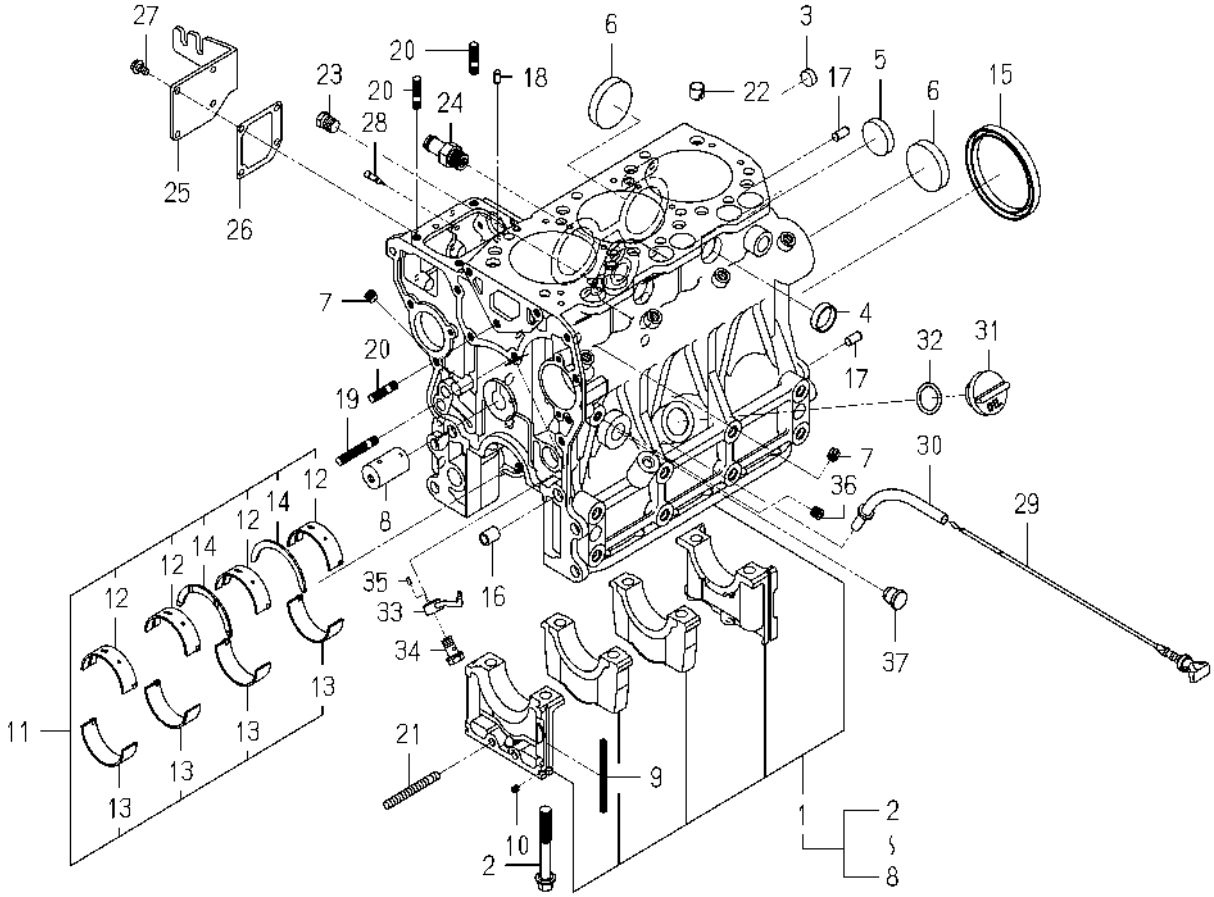

6005-204F-0100

KEY	PART CODE	DESCRIPTION	SPC	TYPE OF MODEL E3CD VG04		ITC	COL	GRP	REMARKS
1	6211-210-116-00	CYLINDERBLOCK ASSY	*	1					
2	6209-000-006-00	BOLT	*	8					
3	6209-610-007-00	CUP/SEALING/16	*	2					
4	6209-610-001-10	CUP/SEALING/28	*	2					
5	6209-610-009-00	CUP/SEALING/36	*	1					
6	6209-610-003-00	CUP/SEALING/50	*	3					
7	6209-605-007-10	PLUG/PT1/8	*	8					
8	6212-531-008-30	PIN/IDLEGEAR	*	1					
9	6211-258-001-00	SEAL,BEARING CAP	*	4					
10	6211-258-002-00	SEAL,BEARING CAP/7	*	2					
11	6211-510-008-00	BEARING/CRANK SET	*	1					
12	6211-511-007-00	BEARING/CRANK/UPPER	*	4					
13	6211-511-008-00	BEARING/CRANK/LOWER	*	4					
14	6211-599-004-00	BEARING/THRUST/CRANK	*	2					
15	6209-625-003-20	OILSEAL	*	1					
16	6209-749-001-20	PIN/TUBE	*	2					
17	6213-129-006-00	PIN/STRAIGHT	*	2					
18	6209-740-005-00	PIN	*	2					
19	6904-110-840-00	STUD/M8X40	*	1					
20	6904-110-822-00	STUD	*	3					
21	V251-340-806-00	STUD/M8X60/7T	*	1					
22	6294-453-002-00	DOWEL	*	2					
23	V782-160-000-4T	PLUG/SCREW/SEAL	*	1					
24	6213-721-015-00	PIPE/WATER/HOUSING	*	1					
25	6211-291-015-20	COVER/INJECTIONPUMP	*	1					
26	6211-292-001-20	GASKET/COVER	*	1					
27	V230-360-601-20	FLANGEBOLT/M6X12	*	4					
28	6215-549-013-00	PIN	*	1					
29	6211-760-057-10	LEVELGAGE	*	1					
30	6211-766-025-00	GUIDE/LEVELGAGE COMP	*	1					

FIG. 6 CYLINDER BLOCK

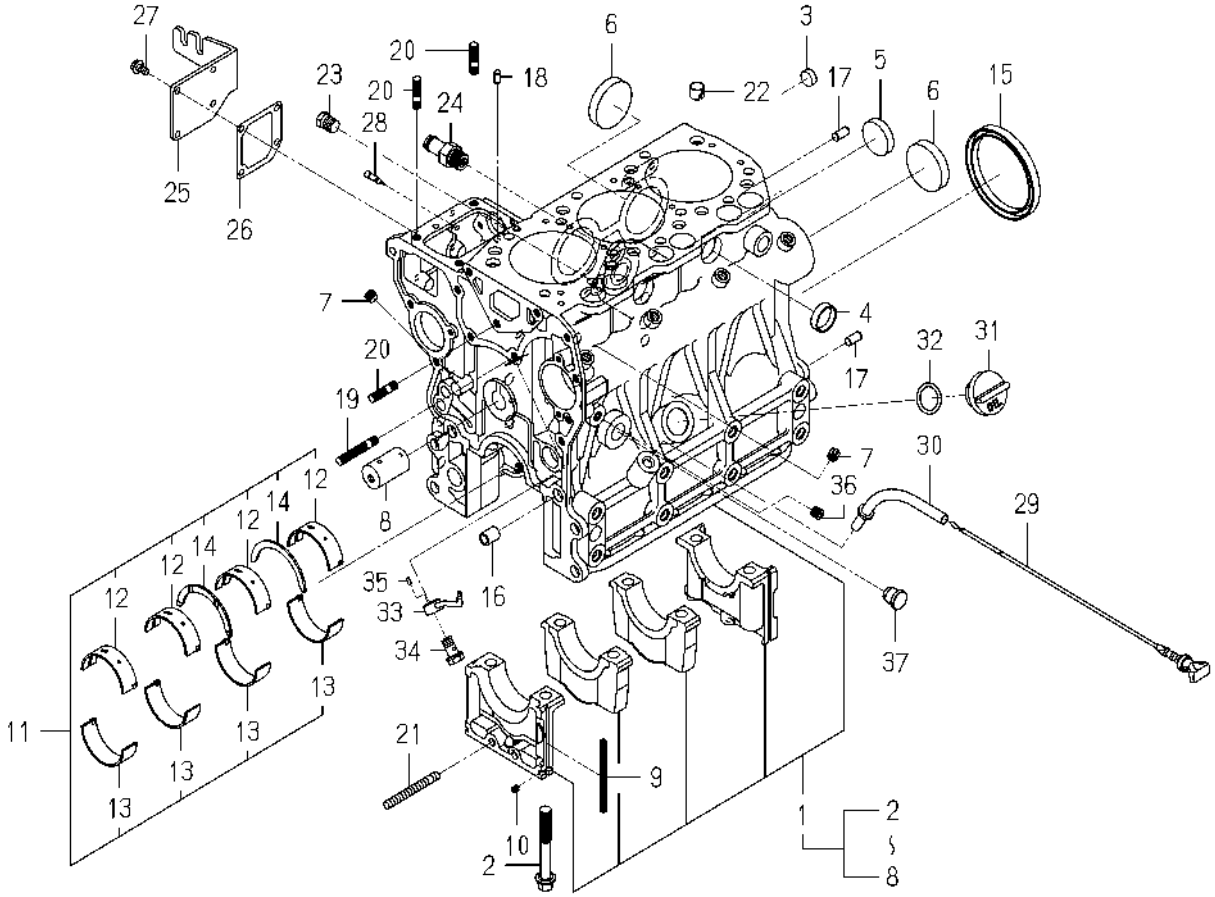

6005-204F-0100

KEY	PART CODE	DESCRIPTION	SPC	TYPE OF MODEL E3CD VG04		ITC	COL	GRP	REMARKS
31	6211-751-002-00	CAP/OILFILLER	*	1					
32	V720-103-502-50	O-RING/1A,P25	*	1					
33	6213-342-013-00	PIPE/OILJET	*	3					
34	6213-342-007-00	EYEBOLT/OILJET ASSY	*	3					
35	6209-740-008-00	PIN/SPRING	*	3					
36	6209-605-007-10	PLUG/PT1/8	*	1					
37	6211-299-012-00	PLUG/CYLINDERBLOCK	*	1					

FIG. 7 BEARING/UNDER SIZE (OPTION)

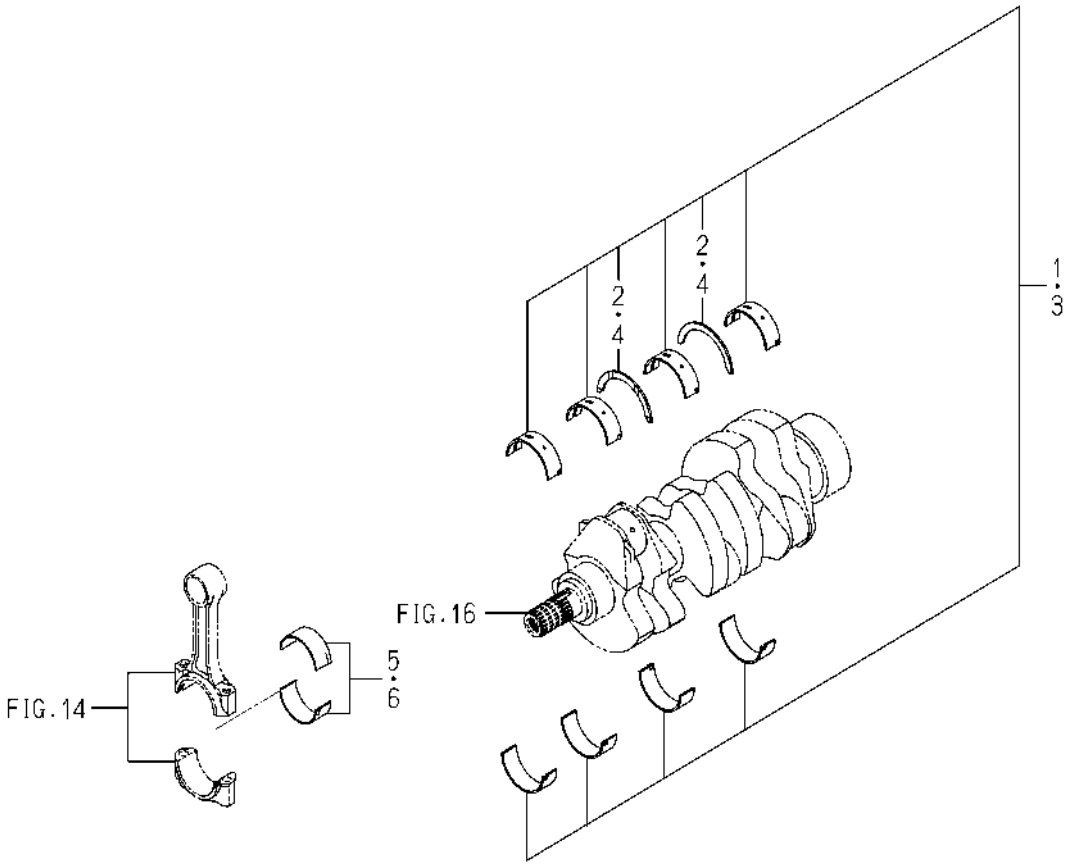

6005-209 -0100

KEY	PART CODE	DESCRIPTION	SPC	TYPE OF MODEL E3CD VG04		ITC	COL	GRP	REMARKS
1	6211-530-008-00	BRG/CRANK/UN025 SET	T	1					
2	6211-599-004-00	BEARING/THRUST/CRANK	T	2					
3	6211-540-008-00	BRG/CRANK/UN050 SET	T	1					
4	6211-599-004-00	BEARING/THRUST/CRANK	T	2					
5	6212-273-009-00	BRG/CONROD/UN025 SET	T	3					
6	6212-274-009-00	BRG/CONROD/UN050 SET	T	3					

FIG. 8 OIL PAN

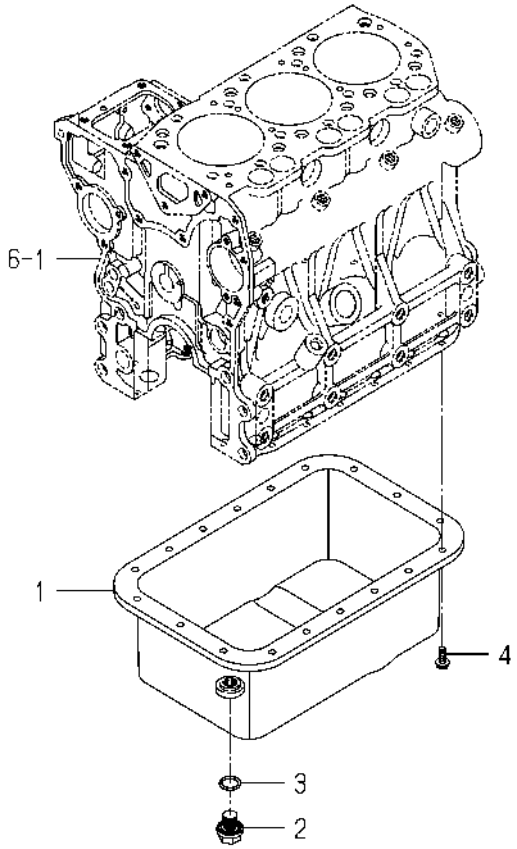

6005-210I-0100

KEY	PART CODE	DESCRIPTION	SPC	TYPE OF MODEL E3CD VG04		ITC	COL	GRP	REMARKS
1	6211-361-076-00	OILPAN COMP	*	1					
2	3805-355-002-20	PLUG/M14X1.5	*	1					
3	V720-102-401-80	O-RING/1A,P18	*	1					
4	V230-360-601-00	FLANGEBOLT/M6X10	*	18					

FIG. 9 REAR PLATE

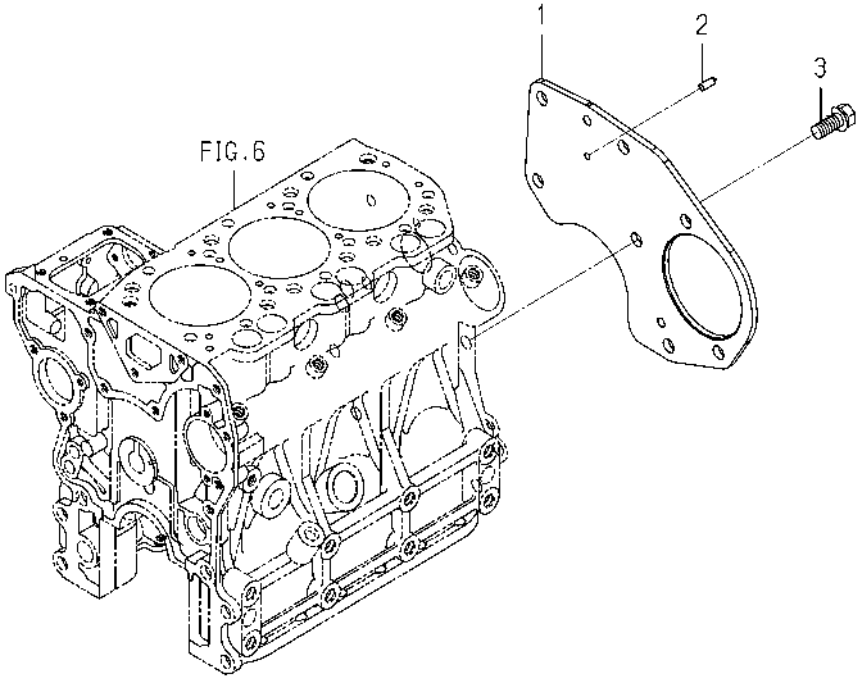

6005-221C-0100

KEY	PART CODE	DESCRIPTION	SPC	TYPE OF MODEL E3CD VG04		ITC	COL	GRP	REMARKS
1	6211-341-126-00	PLATE/REAR	*	1					
2	6211-342-002-10	POINTER	*	1					
3	6209-030-091-00	BOLT/WS	*	5					

FIG. 10 TIMING GEAR CASE

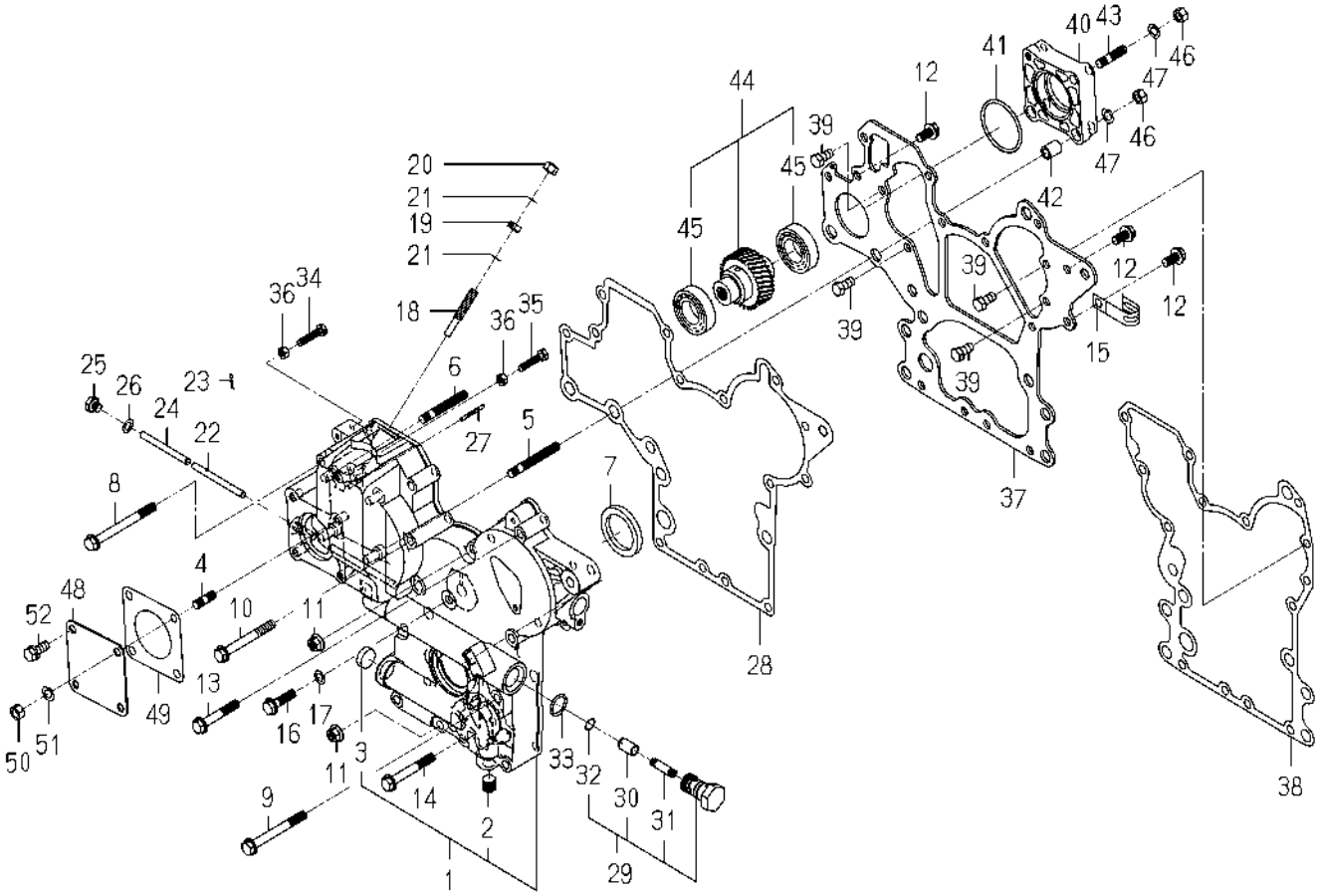

6005-241R-0100,6005-241R-0200

KEY	PART CODE	DESCRIPTION	SPC	TYPE OF MODEL E3CD VG04		ITC	COL	GRP	REMARKS
1	6211-310-075-00	GEARCASE ASSY	*	1					
2	6209-605-003-20	PLUG/PT1/4	*	1					
3	6209-610-004-00	CUP/SEALING/20	*	1					
4	6904-110-822-00	STUD	*	1					
5	6904-110-855-00	STUD	*	2					
6	6904-110-850-00	STUD	*	1					
7	6209-625-002-00	SEAL,OIL	*	1					
8	V231-360-808-50	FLANGEBOLT/M8X85	*	1					
9	V231-360-807-50	FLANGEBOLT/M8X75	*	1					
10	V231-360-807-00	FLANGEBOLT/M8X70	*	1					
11	3817-401-001-00	NUT/M08	*	2					
12	V231-360-801-60	FLANGEBOLT/M8X16	*	3					
13	V231-360-805-00	FLANGEBOLT/M8X50	*	3					
14	V231-360-806-00	FLANGEBOLT/M8X60	*	4					
15	1425-621-004-00	HOLDER/JE/9-9	*	1					
16	V231-360-803-00	FLANGEBOLT/M8X30	*	1					
17	6209-500-003-00	WASHER/08X14X01	*	1					
18	6215-546-003-30	STOPPER/FULLLOAD	*	1					
19	6209-409-001-00	NUT/M8	*	1					
20	V341-120-008-00	NUT,CAP/M8	*	1					
21	6209-920-002-00	PACKING	*	2					
22	6215-542-004-20	PIN/ARM	*	1					
23	P117-303-003-00	PIN/SNAP	*	2					
24	6215-542-005-20	PIN	*	1					
25	6209-600-004-00	PLUG/SCREW	*	1					
26	6209-500-003-00	WASHER/08X14X01	*	1					
27	6209-740-006-00	PIN/GROOVE	*	1					
28	6211-312-005-10	GASKET/GEARCASE	*	1					
29	6213-160-005-00	VALVE/RELIEF ASSY	*	1					
30	6213-161-003-10	PISTON/VALVE/RELIEF	*	1					

FIG. 10 TIMING GEAR CASE

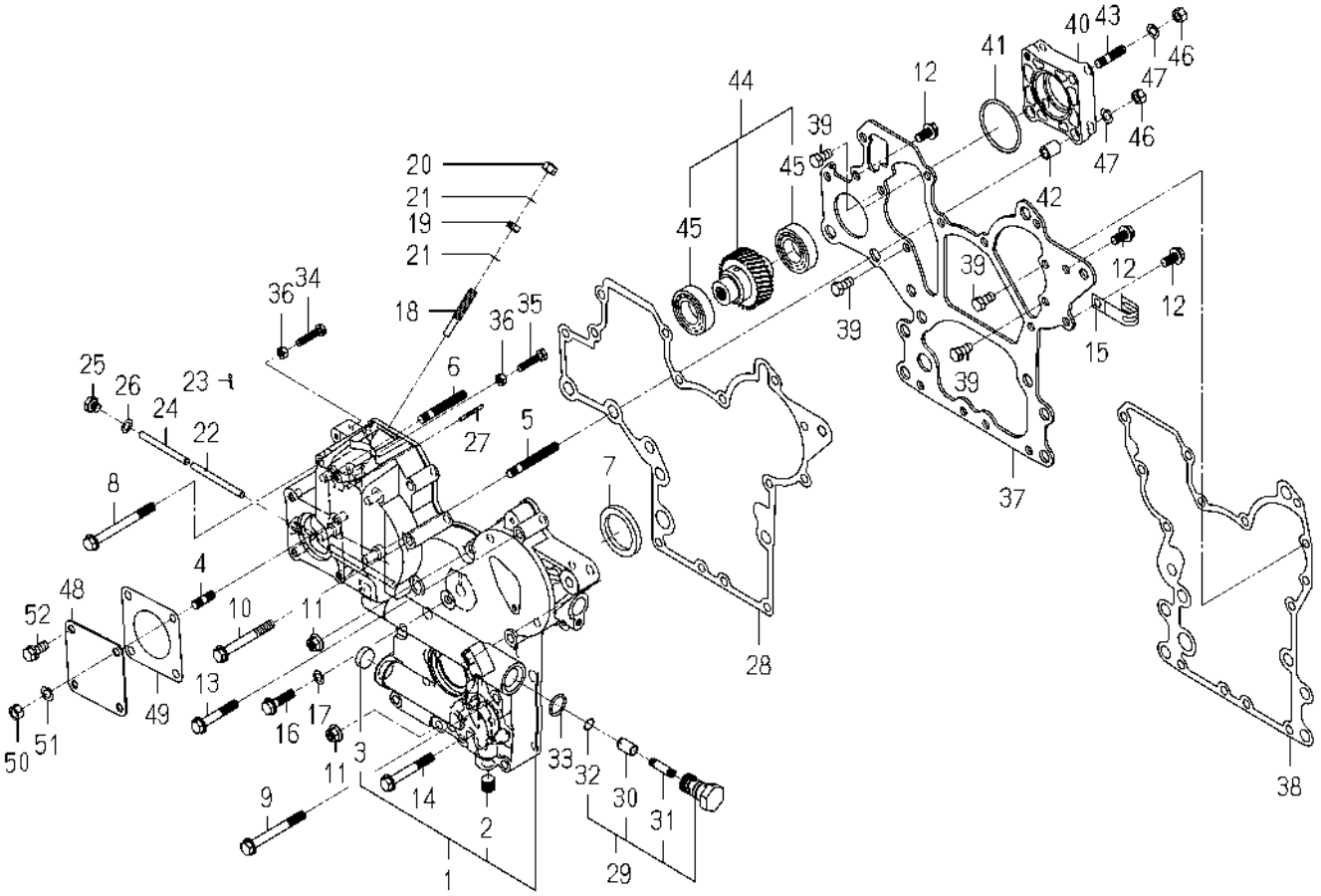

6005-241R-0100,6005-241R-0200

KEY	PART CODE	DESCRIPTION	SPC	TYPE OF MODEL E3CD VG04		ITC	COL	GRP	REMARKS
31	6213-164-001-00	SPRING/RELIEF VALVE	*	1					
32	V705-140-012-00	RING,SNAP/12 C	*	1					
33	V720-102-401-80	O-RING/1A,P18	*	1					
34	6209-050-001-00	BOLT/M6	*	1					
35	6209-050-002-00	BOLT/M6	*	1					
36	V301-260-006-00	NUT/M6	*	2					
37	6211-311-013-20	PLATE/FRONT	*	1					
38	6211-312-006-10	GASKET/PLATE	*	1					
39	6902-050-816-00	BOLT	*	4					
40	6211-319-003-00	SPACER	*	1					
41	V723-102-005-00	O-RING/1A,S50	*	1					
42	6209-749-001-20	PIN/TUBE	*	2					
43	6904-110-822-00	STUD	*	1					
44	6212-530-022-00	SHAFT/HYDRAULIC ASSY	*	1					
45	1729-202-002-00	BEARING/BALL	*	2					
46	V304-260-008-00	NUT/M8	*	4					
47	V401-160-008-00	WASHER,SP/M8	*	4					
48	6211-321-022-00	COVER/HYDRAULIC	*	1					
49	6211-322-002-00	GASKET/COVER	*	1					
50	V304-260-008-00	NUT/M8	*	1					
51	V401-160-008-00	WASHER,SP/M8	*	1					
52	V211-560-802-00	BOLT,S/M8X20/7T	*	3					

FIG. 11 HANGER

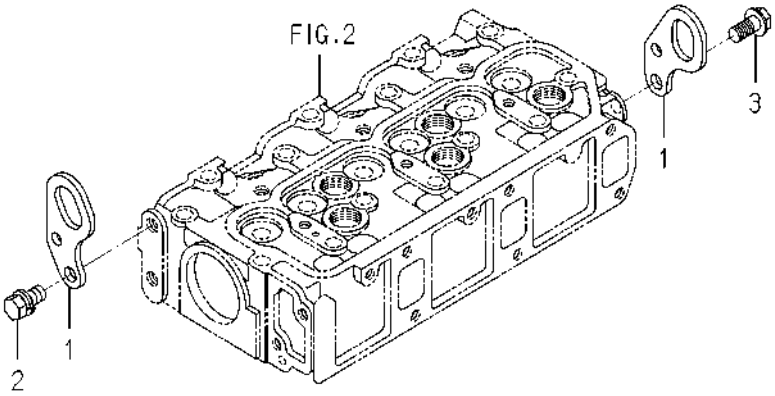

6005-290 -0100

KEY	PART CODE	DESCRIPTION	SPC	TYPE OF MODEL		ITC	COL	GRP	REMARKS
				E3CD VG04					
1	6211-777-007-30	HANGER	*	2					
2	6901-911-020-00	BOLT,SEMS/M10X20,7T	*	1					
3	V233-361-002-00	FLANGEBOLT/M10X20	*	1					

FIG. 12 VALVE

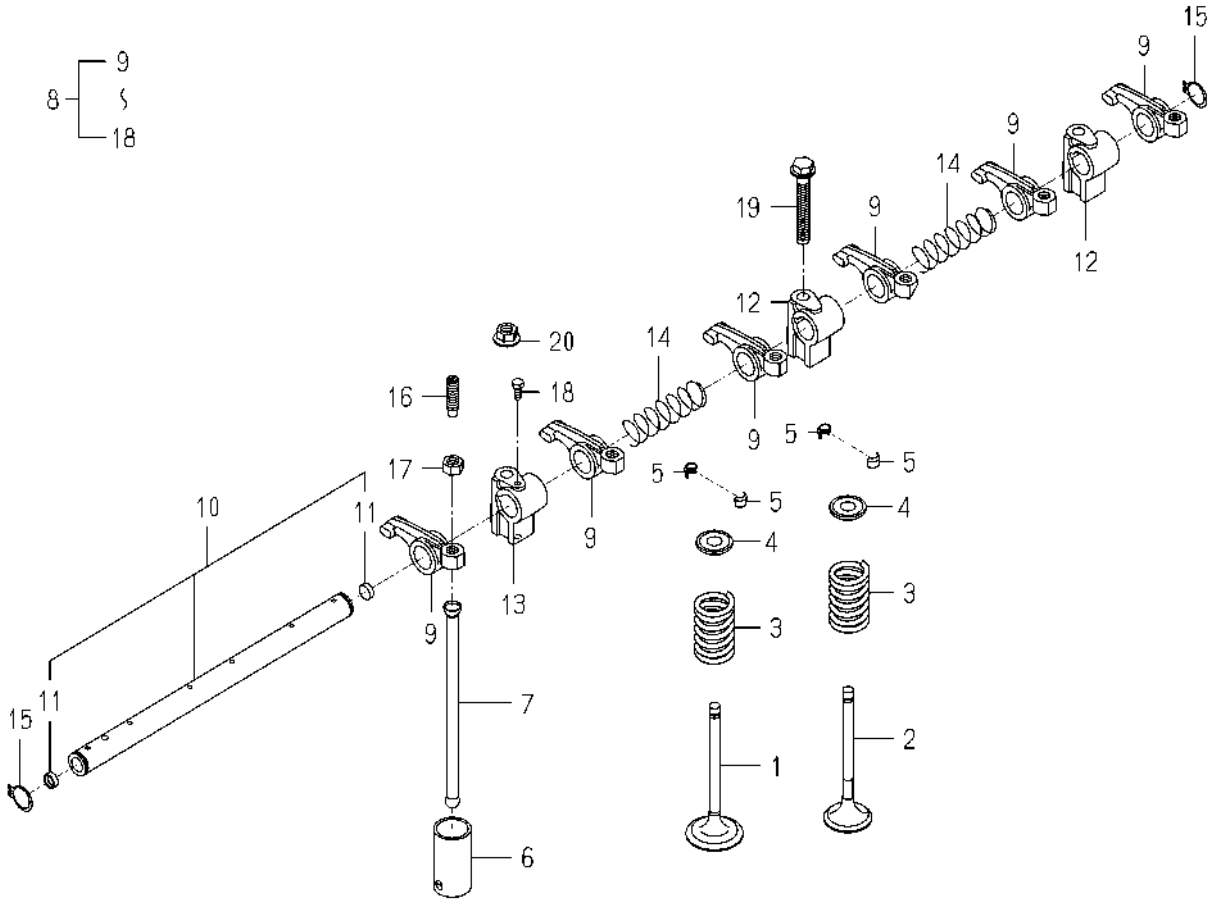

6005-301F-0100

KEY	PART CODE	DESCRIPTION	SPC	TYPE OF MODEL E3CD VG04		ITC	COL	GRP	REMARKS
1	6212-551-020-10	VALVE/INTAKE	*	3					
2	6212-552-008-00	VALVE/EXHAUST	*	3					
3	6212-561-003-00	SPRING/VALVE	*	6					
4	6212-563-005-00	SEAT/VALVESPRING	*	6					
5	6212-565-001-00	CUTTER,VALVE	*	12					
6	6212-571-002-30	TAPPET	*	6					
7	6212-575-003-00	PUSHROD	*	6					
8	6212-600-019-00	ROCKERSHAFT ASSY	*	1					
9	6212-611-014-00	ROCKERARM	*	6					
10	6212-620-017-00	SHAFT/ROCKERARM ASSY	*	1					
11	6212-626-003-00	PLUG	*	2					
12	6212-628-022-00	BRACKET/ROCKERSHAFT	*	2					
13	6212-628-023-00	BRACKET/ROCKERSHAFT	*	1					
14	6212-629-006-00	SPRING	*	2					
15	6212-629-007-00	RING/SNAP	*	2					
16	6212-629-008-00	SCREW/ADJUST	*	6					
17	6212-629-009-00	NUT	*	6					
18	6212-629-010-00	BOLT	*	1					
19	V231-360-805-50	FLANGEBOLT/M8X55	*	1					
20	3817-401-001-00	NUT/M08	*	2					

FIG. 13 CAM SHAFT

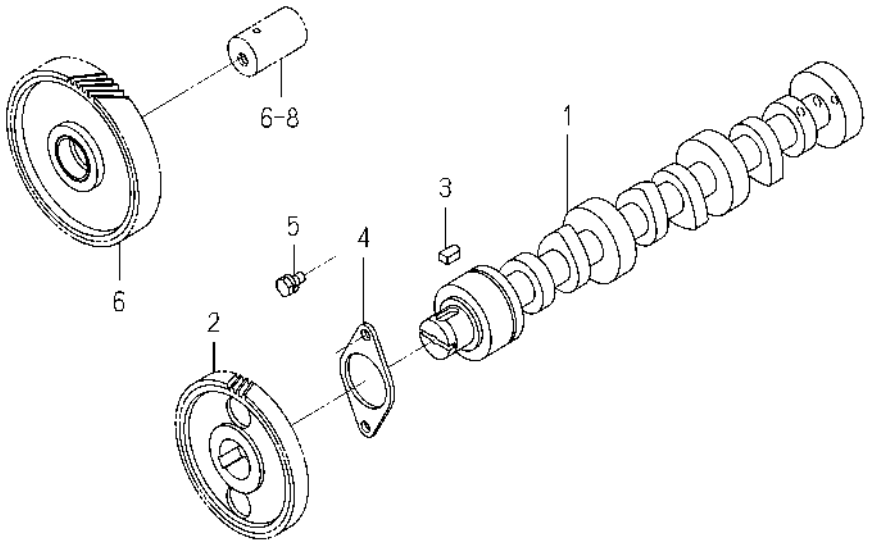

6005-310 -0100

KEY	PART CODE	DESCRIPTION	SPC	TYPE OF MODEL E3CD VG04		ITC	COL	GRP	REMARKS
1	6212-511-005-10	CAMSHAFT	*	1					
2	6212-522-004-20	GEAR/CAMSHAFT	*	1					
3	6209-730-005-00	KEY/07X05X09	*	1					
4	6212-535-007-00	PLATE/THRUST	*	1					
5	V210-560-601-20	BOLT,S/M6X12/7T	*	2					
6	6212-523-006-50	GEAR/IDLE ASSY	*	1					

FIG. 14 PISTON

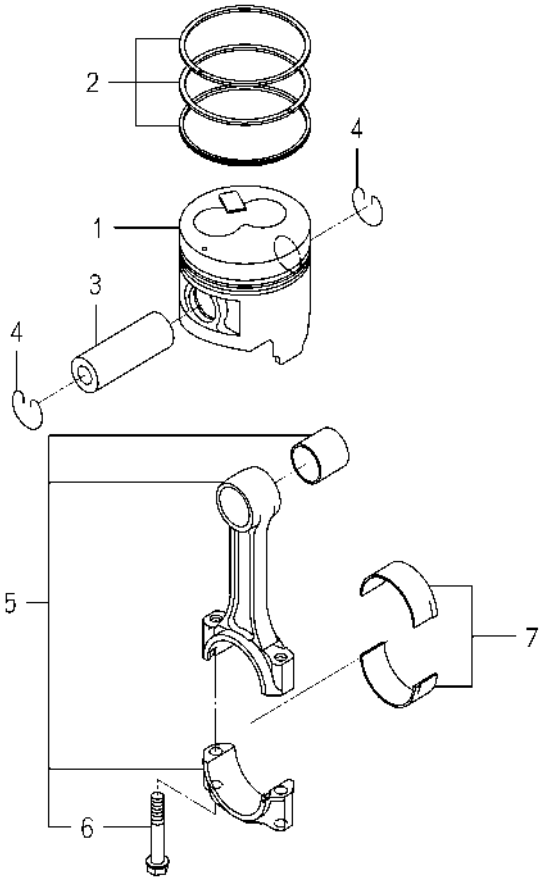

6005-340P-0100

KEY	PART CODE	DESCRIPTION	SPC	TYPE OF MODEL E3CD VG04		ITC	COL	GRP	REMARKS
1	6212-111-095-40	PISTON	*	3					
2	6212-121-028-30	RING/PISTONSET	*	3					
3	6212-211-002-00	PIN/PISTON	*	3					
4	6909-950-115-00	RING SNAP	*	6					
5	6212-230-011-30	CONNECTINGROD ASSY	*	3					
6	6212-235-004-10	BOLT/CONNECTINGROD	*	6					
7	6212-271-009-00	BEARING/CONNECTING R	*	3					

FIG. 15 PISTON/OVER SIZE (OPTION)

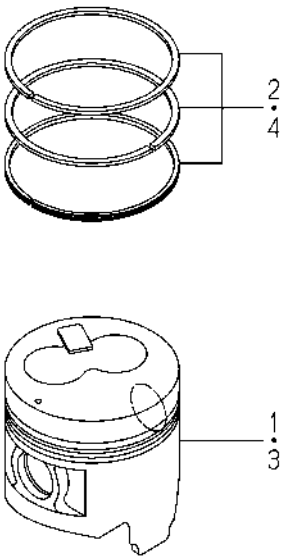

6005-349P-0100

KEY	PART CODE	DESCRIPTION	SPC	TYPE OF MODEL		ITC	COL	GRP	REMARKS
				E3CD VG04					
1	6212-114-095-40	PISTON(OV/050)	T	3					
2	6212-124-028-30	RINGPISTON/OV050 SET	T	3					
3	6212-116-095-40	PISTON(OV/100)	T	3					
4	6212-126-028-30	RINGPISTON/OV100 SET	T	3					

FIG. 16 CRANK SHAFT

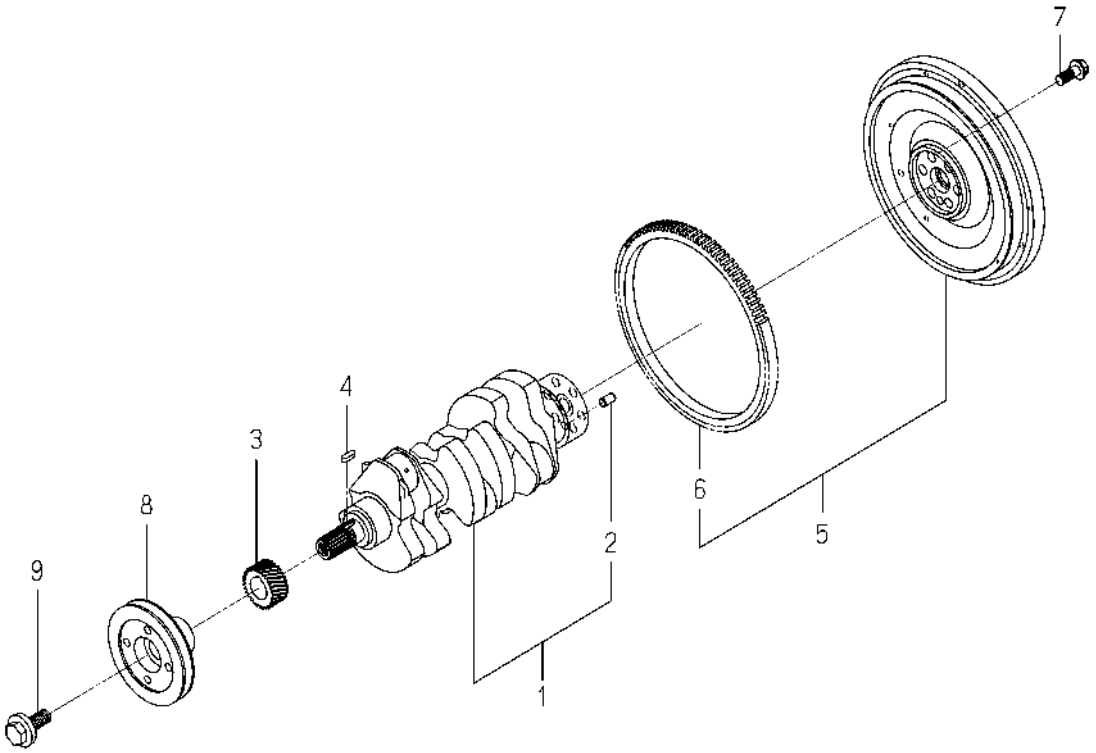

6005-352C-0100

KEY	PART CODE	DESCRIPTION	SPC	TYPE OF MODEL E3CD VG04		ITC	COL	GRP	REMARKS
1	6212-310-049-00	CRANKSHAFT ASSY	*	1					
2	V523-101-001-80	PIN,ST,B/10X18	*	1					
3	6212-521-008-00	GEAR/CRANK	*	1					
4	6209-730-002-00	KEY/07X05X20	*	1					
5	6212-330-091-20	FLYWHEEL ASSY	*	1					
6	6212-333-007-10	RINGGEAR	*	1					
7	6209-046-015-00	BOLT/FLANGE	*	6					
8	6212-371-081-00	PULLEY/CRANK	*	1					
9	6209-000-043-00	BOLT/CRANK	*	1					

FIG. 17 OIL PUMP

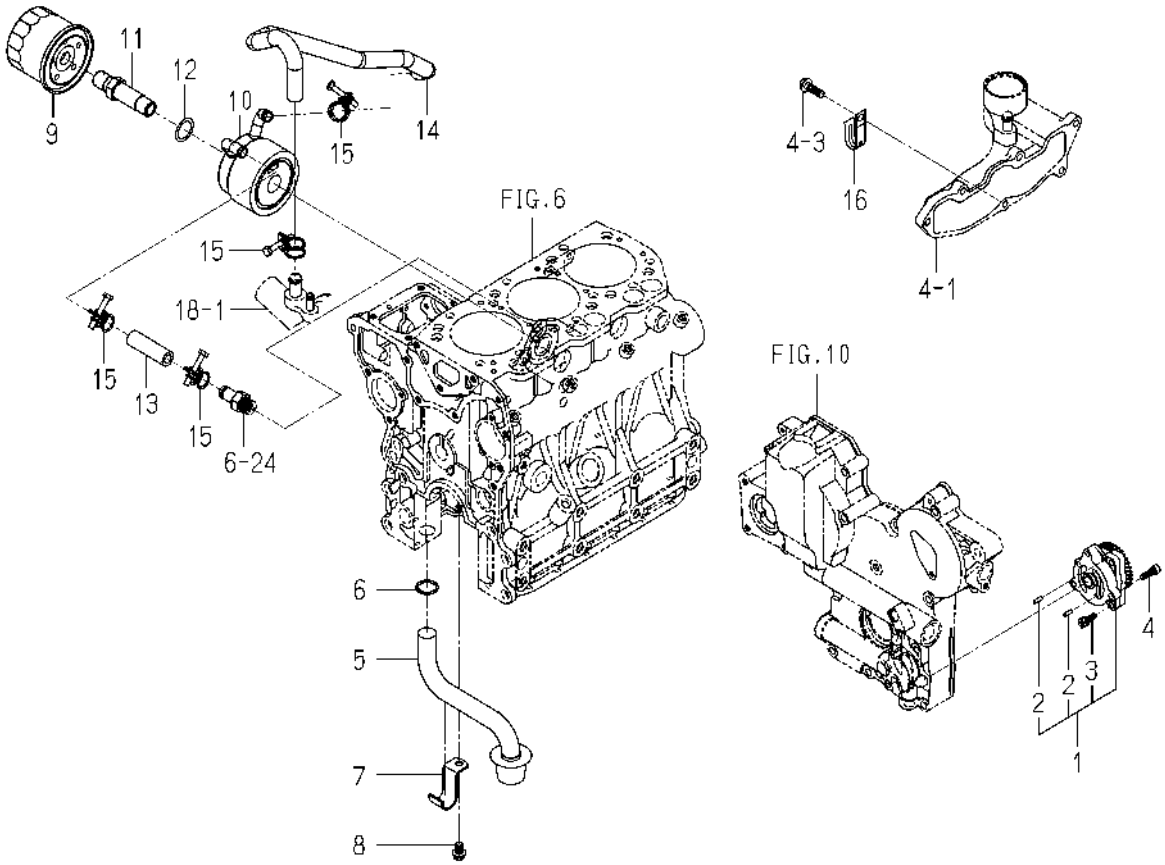

6005-401O-0100

KEY	PART CODE	DESCRIPTION	SPC	TYPE OF MODEL E3CD VG04		ITC	COL	GRP	REMARKS
1	6213-100-010-00	OILPUMP ASSY	*	1					
2	6213-129-003-00	PIN/STRAIGHT	*	2					
3	6213-119-001-00	BOLT/WS	*	3					
4	V220-540-602-00	SCREW,SOCKET/M6X20	*	3					
5	6213-140-005-20	STRAINER	*	1					
6	V720-103-502-20	O-RING/1A,P22A	*	1					
7	6213-149-003-20	CLAMP/STRAINER	*	1					
8	V231-360-801-60	FLANGEBOLT/M8X16	*	1					
9	6213-240-011-00	CARTRIDGE/OILFILTER	*	1					
10	6221-700-007-00	OILCOOLERASSY	*	1					
11	6221-726-015-00	CONNECTOR/OILCOOLER	*	1					
12	6221-726-010-00	WASHER/OILCOOLER	*	1					
13	6213-729-026-00	HOSE/OILCOOLER/IN	*	1					
14	6209-360-145-00	HOSE/OILCOOLER/OUT	*	1					
15	J061-216-020-00	CLAMP/WIRE/16-20	*	4					
16	1425-621-004-00	HOLDER/JE/9-9	*	1					

FIG. 18 WATER PUMP

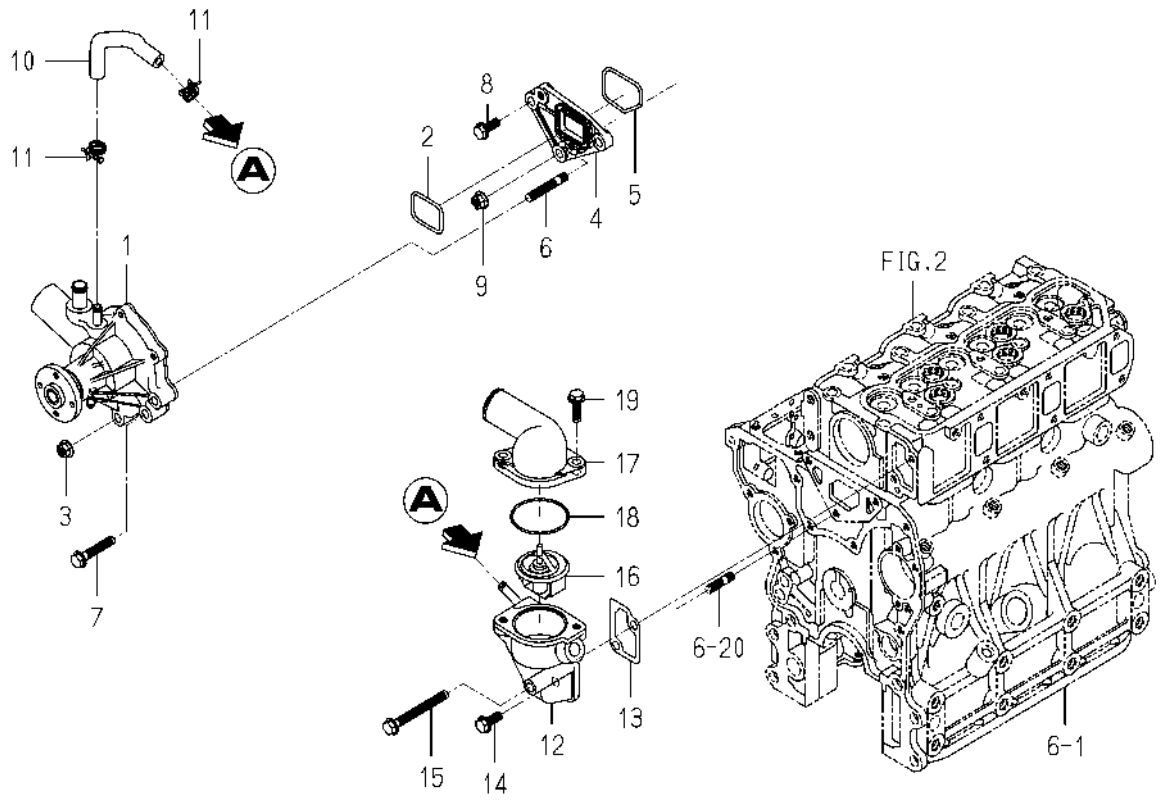

6005-420V-0100

KEY	PART CODE	DESCRIPTION	SPC	TYPE OF MODEL E3CD VG04		ITC	COL	GRP	REMARKS
1	6213-610-011-20	WATERPUMP ASSY	*	1					
2	6213-614-013-00	GASKET/WATERPUMP	*	1					
3	3817-401-001-00	NUT/M08	*	2					
4	6213-619-006-00	SPACER/WATERPUMP	*	1					
5	6213-614-014-00	GASKET/SPACER	*	1					
6	6904-110-840-00	STUD/M8X40	*	2					
7	V231-360-804-50	FLANGEBOLT/M8X45	*	1					
8	V231-360-802-00	FLANGEBOLT/M8X20	*	1					
9	3817-401-001-00	NUT/M08	*	1					
10	6213-729-031-00	HOSE/RUBBER	*	1					
11	J061-210-015-00	CLAMP/WIRE/10-15	*	2					
12	6213-716-001-60	HOUSING/THERMOSTAT	*	1					
13	6213-743-002-10	GASKET/HOUSING	*	1					
14	V231-360-802-00	FLANGEBOLT/M8X20	*	1					
15	V231-360-807-50	FLANGEBOLT/M8X75	*	1					
16	6513-770-022-10	THERMOSTAT	*	1					
17	6213-711-004-00	PIPE/WATEROUTLET	*	1					
18	V723-102-005-50	O-RING/1A,S55	*	1					
19	V231-360-802-50	FLANGEBOLT/M8X25	*	2					

FIG. 19 COOLING FAN

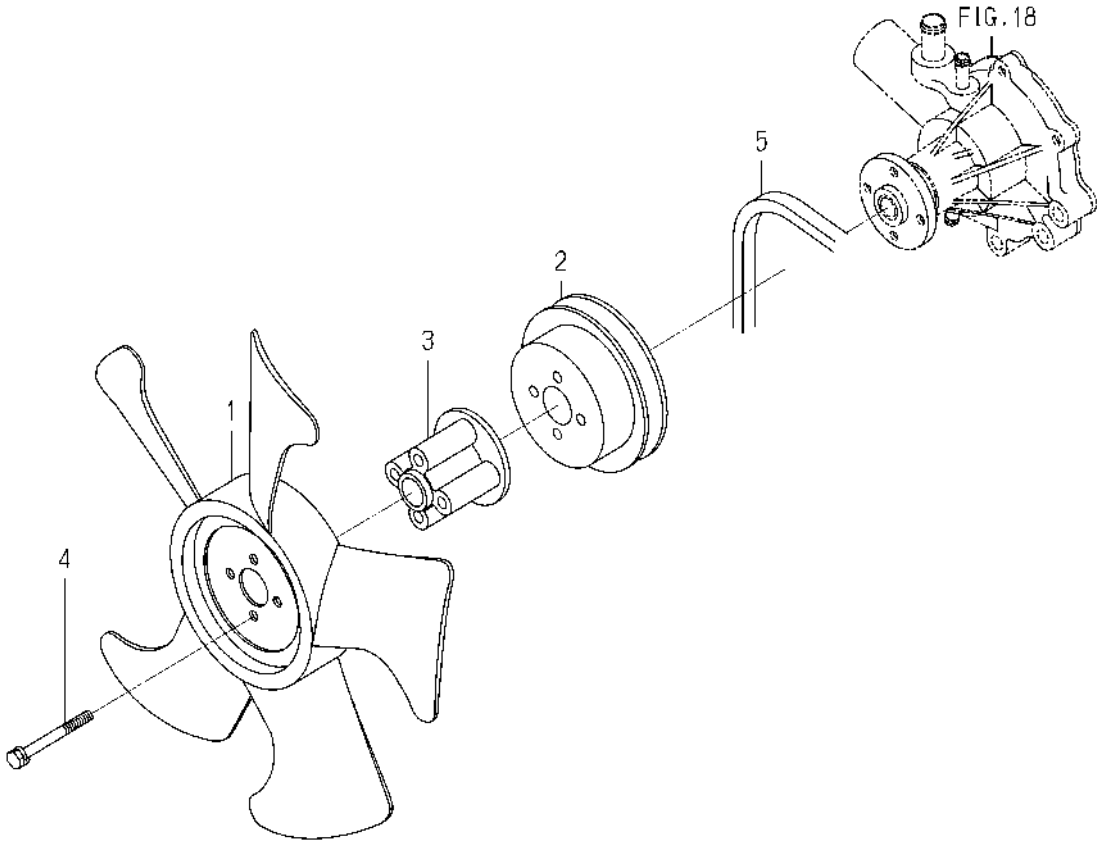

6005-481H-0100

KEY	PART CODE	DESCRIPTION	SPC	TYPE OF MODEL E3CD VG04		ITC	COL	GRP	REMARKS
1	6213-660-023-00	FAN/COOLING	*	1					
2	6213-641-022-20	PULLEY/WATERPUMP	*	1					
3	6213-669-008-00	SPACER/FAN/48	*	1					
4	6209-030-044-00	BOLT/WS	*	4					
5	6213-671-058-00	BELT/VNR5A40.0	*	1					

FIG. 20 INJECTION NOZZLE

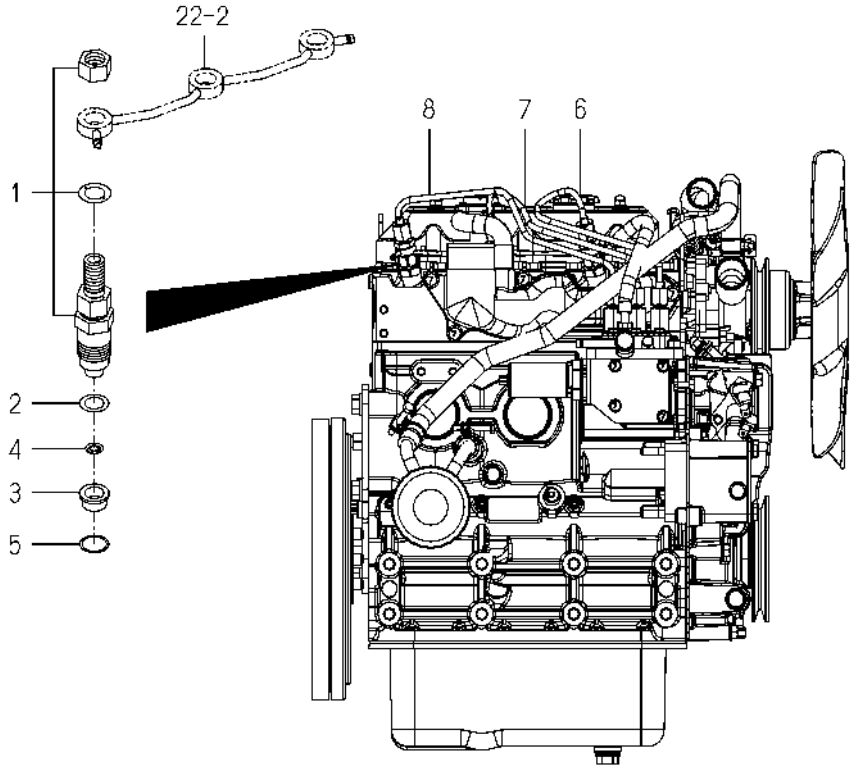

6005-501E-0100

KEY	PART CODE	DESCRIPTION	SPC	TYPE OF MODEL E3CD VG04		ITC	COL	GRP	REMARKS
1	6215-300-045-10	INJECTIONNOZZLE ASSY	*	3					FIG 027
2	6215-315-002-00	GASKET,NOZZLE	*	3					
3	6215-315-006-00	HEATSHILD/NOZZLE	*	3					
4	6215-315-005-00	WASHER/CORRUGATE	*	3					
5	6215-315-007-00	GASKET	*	3					
6	6215-411-133-00	PIPE/INJECTION ASSY	*	1					
7	6215-411-134-00	PIPE/INJECTION ASSY	*	1					
8	6215-411-135-00	PIPE/INJECTION ASSY	*	1					

FIG. 21 INJECTION PUMP

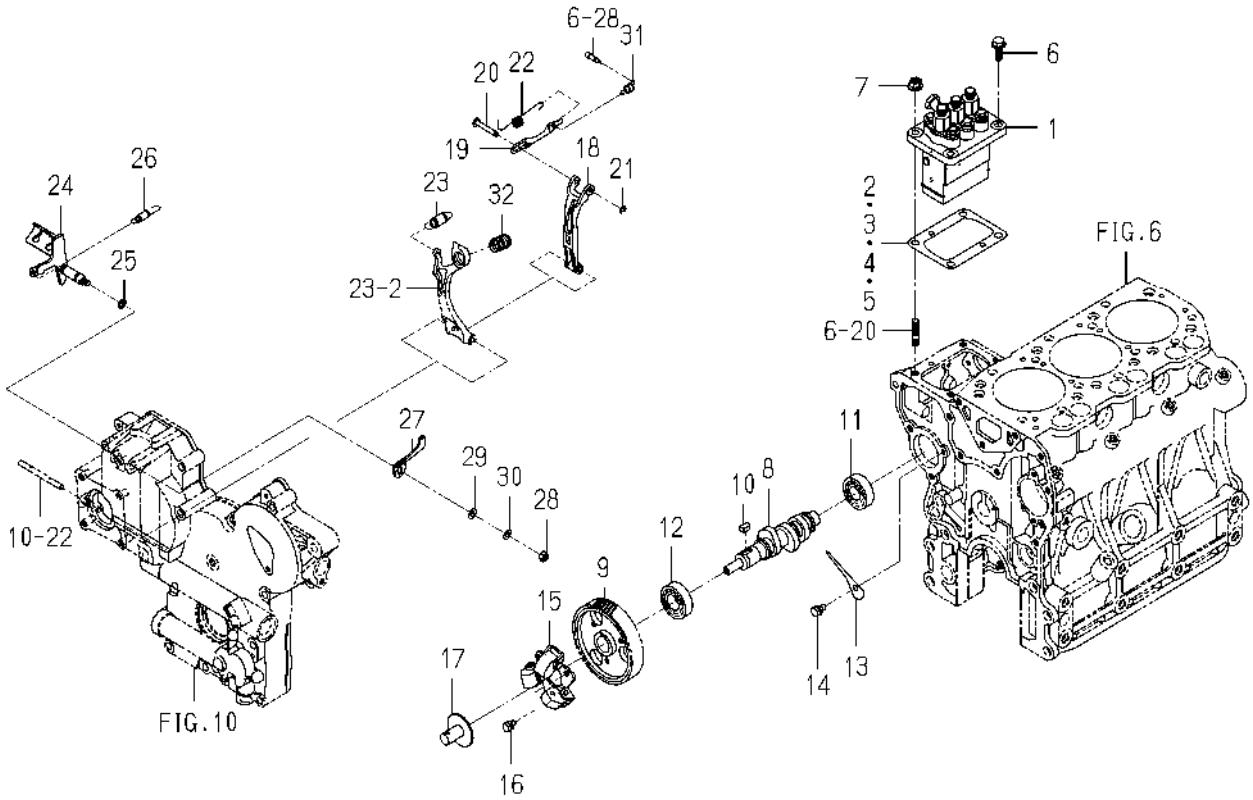

6005-511Z-0100

KEY	PART CODE	DESCRIPTION	SPC	TYPE OF MODEL E3CD VG04		ITC	COL	GRP	REMARKS
1	6215-600-104-20	INJECTIONPUMP ASSY	*	1					FIG 028
2	6219-752-045-00	SHIM/INJECTIONPUMP	*	1					
3	6219-752-044-00	SHIM/INJECTIONPUMP	*	1					
4	6219-752-046-00	SHIM/INJECTIONPUMP	*	1					
5	6219-752-047-00	SHIM/INJECTIONPUMP	*	1					
6	V231-360-802-00	FLANGEBOLT/M8X20	*	2					
7	3817-401-001-00	NUT/M08	*	2					
8	6215-621-017-10	CAMSHAFT/INJPUMP	*	1					
9	6212-524-006-30	GEAR/INJECTIONPUMP	*	1					
10	6209-730-005-00	KEY/07X05X09	*	1					
11	V600-110-620-30	BEARING,RB/6203	*	1					
12	1729-202-001-00	BEARING/BALL	*	1					
13	6212-535-009-00	PLATE/THRUST/INJPUMP	*	1					
14	V210-560-601-20	BOLT,S/M6X12/7T	*	1					
15	6215-520-007-10	FLYWEIGHT ASSY	*	1					
16	6209-030-043-00	BOLT/M6X10	*	3					
17	6215-526-004-00	THRUSTPIECE	*	1					
18	6215-541-001-10	ARM/FLOATING COMP	*	1					
19	6215-543-002-10	RINK/CONTROL	*	1					
20	6215-542-006-00	PIN,CONTROL	*	1					
21	V710-140-004-00	RING,SNAP/4 E	*	1					
22	6215-549-031-10	SPRING/SETTING	*	1					
23	6215-531-019-00	SPRING/GOVERNOR	*	1					
24	6215-541-045-10	LEVER/CONTROL COMP	*	1					
25	V720-101-900-80	O-RING/1A,P8	*	1					
26	6209-580-002-10	SPRING,RETURN	*	1					
27	6215-549-076-10	ARM/CONTROL	*	1					
28	V301-260-006-00	NUT/M6	*	1					
29	V411-260-006-00	WASHER,PL/M6	*	1					
30	V401-160-006-00	WASHER,SP/M6	*	1					

FIG. 21 INJECTION PUMP

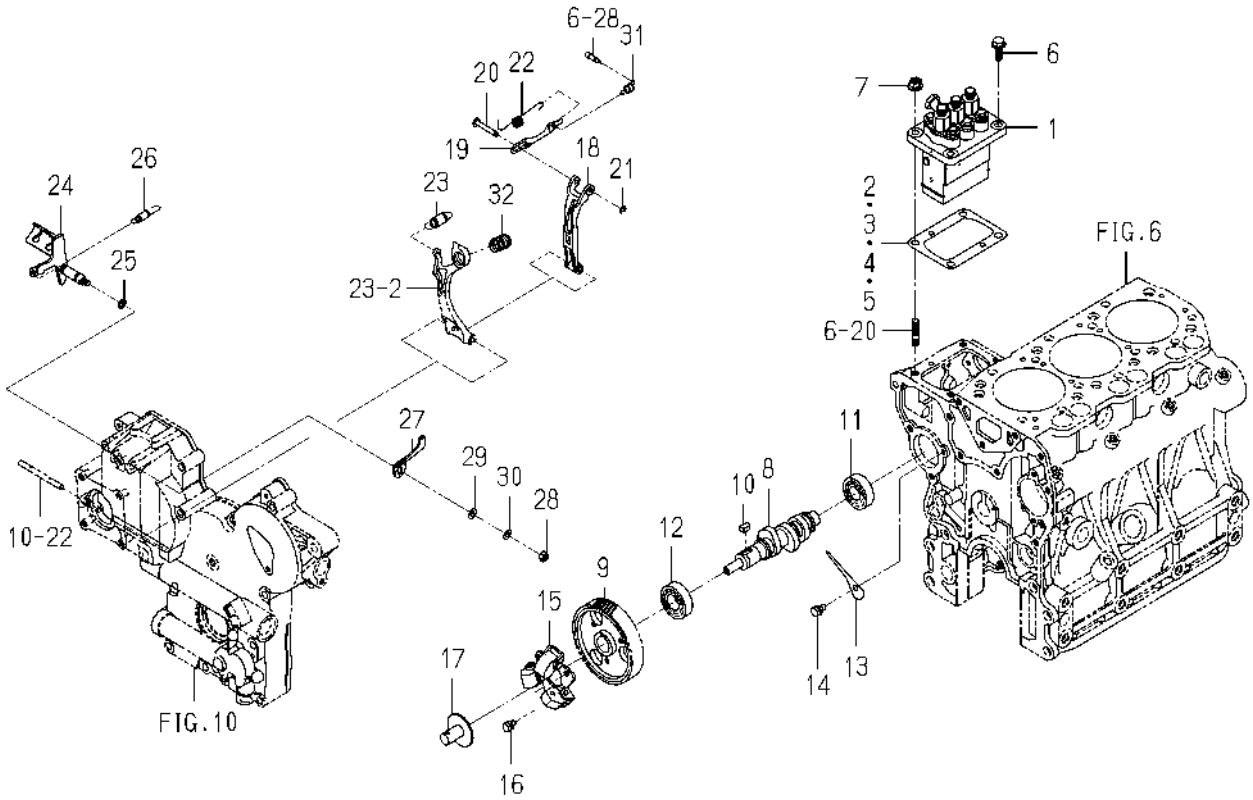

6005-511Z-0100

KEY	PART CODE	DESCRIPTION	SPC	TYPE OF MODEL E3CD VG04		ITC	COL	GRP	REMARKS
31	6215-549-039-00	SPRING/STARTING	*	1					
32	6215-537-002-10	SPRING/IDLE	*	1					

FIG. 22 FUEL PIPE

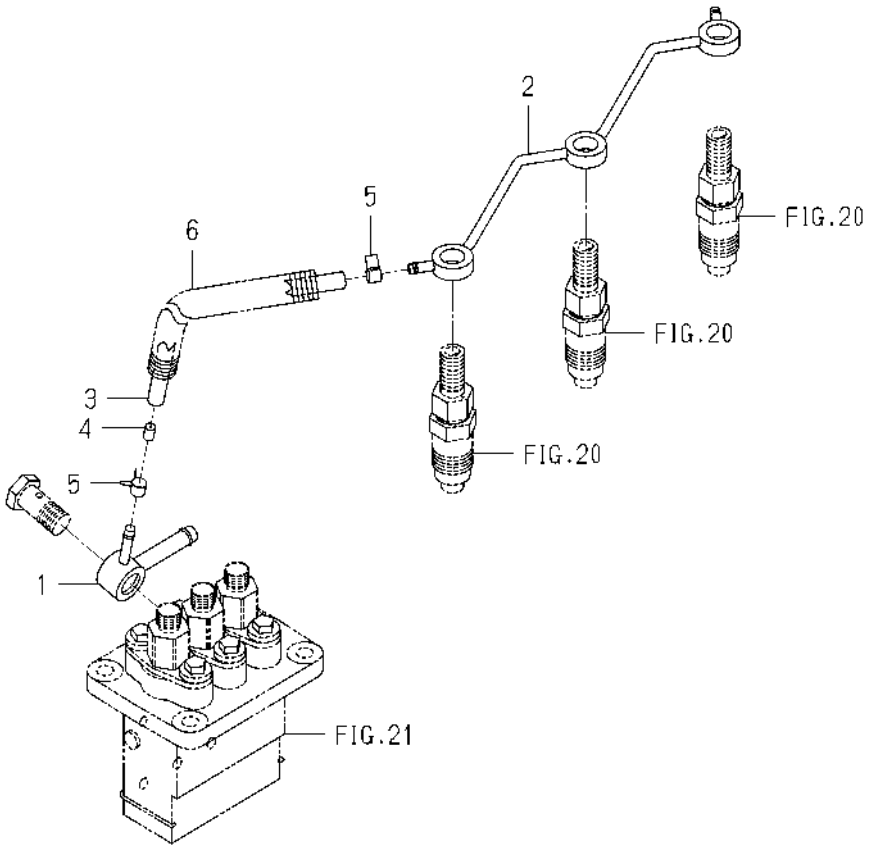

6005-550J-0100

KEY	PART CODE	DESCRIPTION	SPC	TYPE OF MODEL E3CD VG04		ITC	COL	GRP	REMARKS
1	6215-412-004-00	CONNECTOR/FUEL	*	1					
2	6215-411-136-00	PIPE/FUEL	*	1					
3	6209-360-011-00	HOSE/RUBBER	*	1					
4	3640-586-004-00	RESISTANCE/1.0	*	1					
5	J062-076-082-00	CLIP/HOSE/7.6-8.2	*	2					
6	6209-360-143-00	CORRUGATEDTUBE	*	1					

FIG. 23 ADAPTER

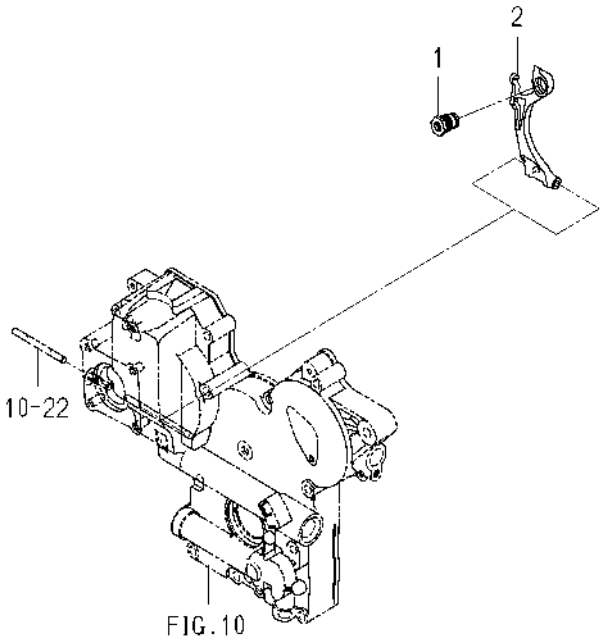

6005-561N-0100

KEY	PART CODE	DESCRIPTION	SPC	TYPE OF MODEL E3CD VG04		ITC	COL	GRP	REMARKS
1	6215-548-121-00	ADAPTER/240X100 ASSY	*	1					
2	6215-541-016-40	ARM/TENSION	*	1					

FIG. 24 ELECTRIC (1)

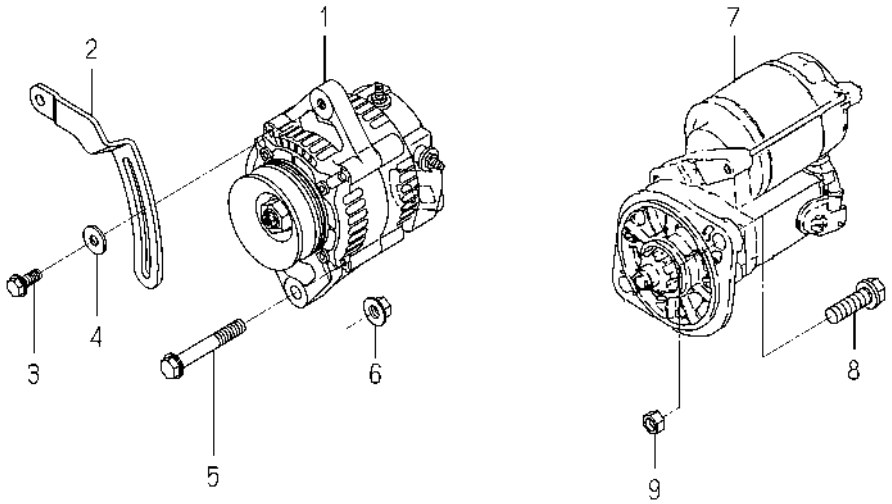

6005-801Y-0100,6005-801Y-0200

KEY	PART CODE	DESCRIPTION	SPC	TYPE OF MODEL E3CD VG04		ITC	COL	GRP	REMARKS
1	6281-200-015-00	GENERATOR ASSY	*	1					FIG 030
2	6213-674-012-20	PLATE/ADJUST	*	1					
3	V231-360-802-00	FLANGEBOLT/M8X20	*	1					
4	1373-121-001-00	WASHER/9X22X2	*	1					
5	V233-361-007-00	FLANGEBOLT/M10X70	*	1					
6	6209-440-007-00	NUT/FLANGE/M10	*	1					
7	6281-100-002-50	STARTER ASSY	*	1					FIG 029
8	6901-931-240-00	BOLT,SEMS/M12X40/7T	*	2					
9	V304-260-012-00	NUT/M12	*	2					

FIG. 25 ELECTRIC (2)

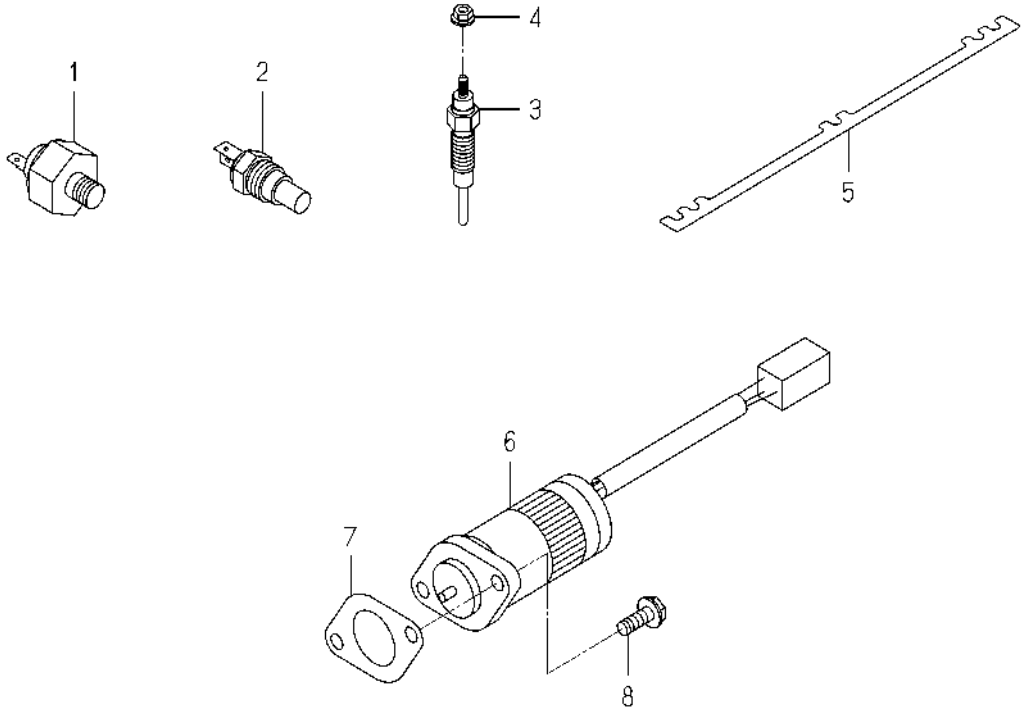

6005-821F-0100,6005-821F-0200

KEY	PART CODE	DESCRIPTION	SPC	TYPE OF MODEL E3CD VG04		ITC	COL	GRP	REMARKS
1	6281-971-001-10	SWITCH/OILPRESSURE	*	1					
2	6282-450-011-00	THERMOMETER	*	1					
3	6281-410-023-10	GLOWPLUG	*	3					
4	6209-440-005-00	NUT/FLANGE	*	3					
5	6219-732-017-00	CONNECTOR/GLOWPLUG	*	1					
6	6281-910-013-00	SOLENOID	*	1					
7	6209-630-002-10	GASKET	*	1					
8	V230-360-601-60	FLANGEBOLT/M6X16	*	2					

FIG. 26 REPAIR PARTS(OPTION)

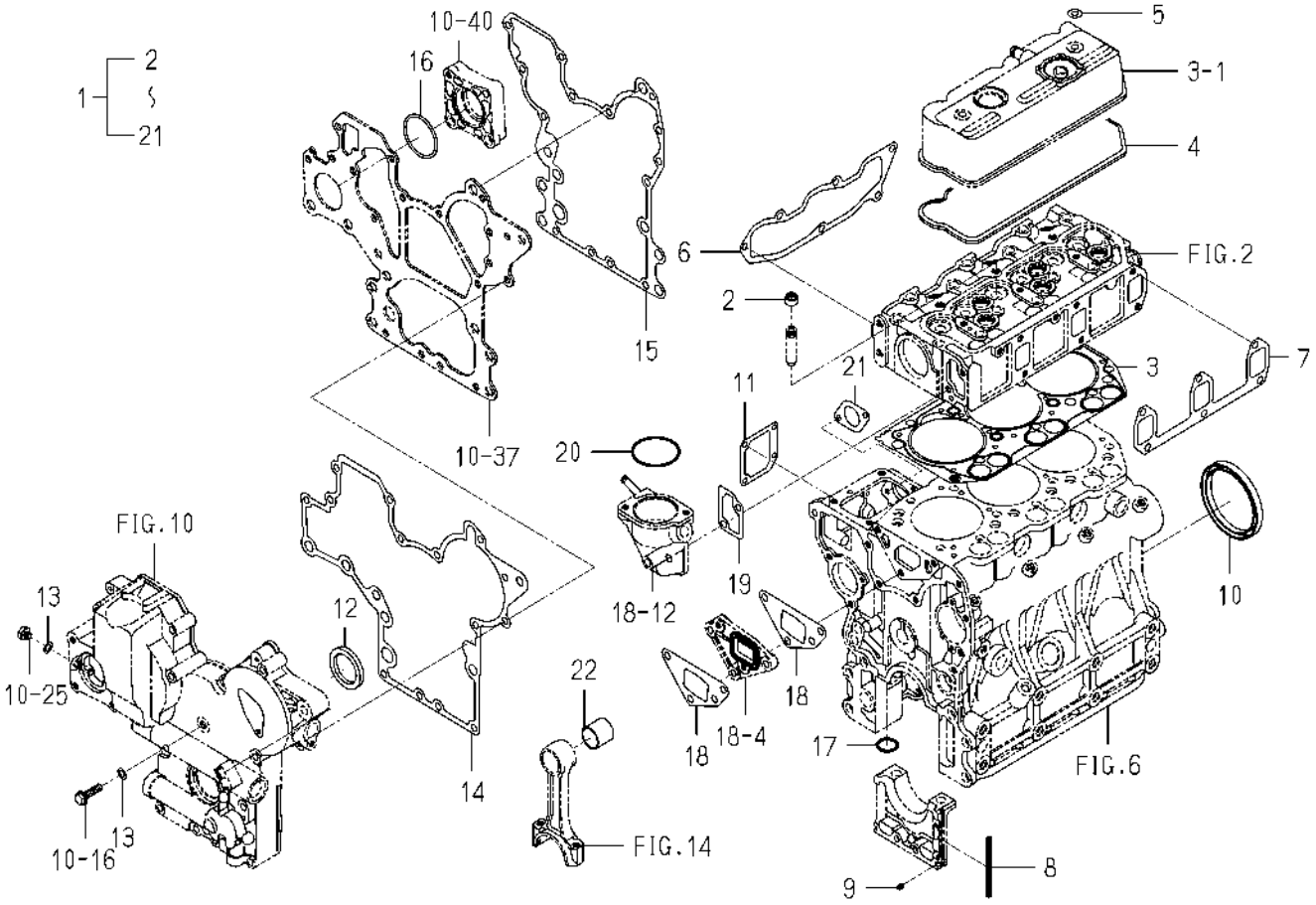

6005-999I-0100

KEY	PART CODE	DESCRIPTION	SPC	TYPE OF MODEL E3CD VG04		ITC	COL	GRP	REMARKS
1	6287-810-032-10	REPAIR/ENGINESET	T	1					
2	6212-569-002-00	SEAL,OIL	T	6					
3	6211-141-057-10	GASKET/CYLINDERHEAD	T	1					
4	6211-173-005-00	SEAL/CYL HEAD/UNDER	T	1					
5	6209-572-003-00	GASKET	T	2					
6	6214-115-003-10	GASKET/INLETMANIFOLD	T	1					
7	6214-145-004-20	GASKET/EXH MANIFOLD	T	1					
8	6211-258-001-00	SEAL,BEARING CAP	T	4					
9	6211-258-002-00	SEAL,BEARING CAP/7	T	2					
10	6209-625-003-20	OILSEAL	T	1					
11	6211-292-001-20	GASKET/COVER	T	1					
12	6209-625-002-00	SEAL,OIL	T	1					
13	6209-500-003-00	WASHER/08X14X01	T	2					
14	6211-312-005-10	GASKET/GEARCASE	T	1					
15	6211-312-006-10	GASKET/PLATE	T	1					
16	V723-102-005-00	O-RING/1A,S50	T	1					
17	V720-103-502-20	O-RING/1A,P22A	T	1					
18	6213-614-001-10	GASKET,WATER PUMP	T	2					
19	6213-743-002-10	GASKET/HOUSING	T	1					
20	V723-102-005-50	O-RING/1A,S55	T	1					
21	6209-630-002-10	GASKET	T	1					
22	6212-251-003-30	BUSH/CONNECTINGROD	T	3					

FIG. 27 COMPONENT PARTS FOR 6215-300-045-10 ON Fig.20

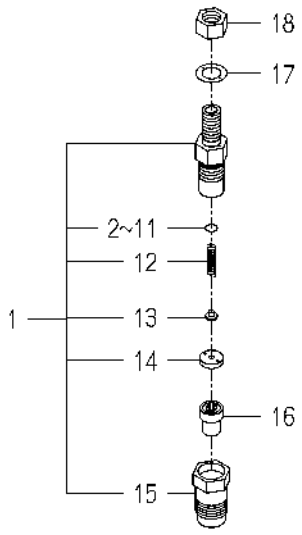

6215-300-045-1B

KEY	PART CODE	DESCRIPTION	SPC	TYPE OF MODEL E3CD VG04		ITC	COL	GRP	REMARKS
1	6215-330-028-00	HOLDER/NOZZLEASSY	*	3					
2	6215-345-044-00	SHIM/0.10	*	3					
3	6215-345-045-00	SHIM/0.20	*	3					
4	6215-345-046-00	SHIM/0.30	*	3					
5	6215-345-047-00	SHIM/0.40	*	3					
6	6215-345-048-00	SHIM/0.50	*	3					
7	6215-345-049-00	SHIM/0.52	*	3					
8	6215-345-050-00	SHIM/0.54	*	3					
9	6215-345-051-00	SHIM/0.56	*	3					
10	6215-345-052-00	SHIM/0.58	*	3					
11	6215-345-053-00	SHIM/0.80	*	3					
12	6215-343-010-00	SPRINGNOZZLE	*	3					
13	6215-342-013-00	SPRINGSEAT	*	3					
14	6215-339-004-00	SPACER	*	3					
15	6215-332-014-00	NUT/NOZZLERETAINING	*	3					
16	6215-311-036-00	NOZZLE	*	3					
17	6215-359-003-00	GASKET	*	3					
18	6215-359-004-00	NUT	*	3					

FIG. 28 COMPONENT PARTS FOR 6215-600-104-20 ON Fig.21

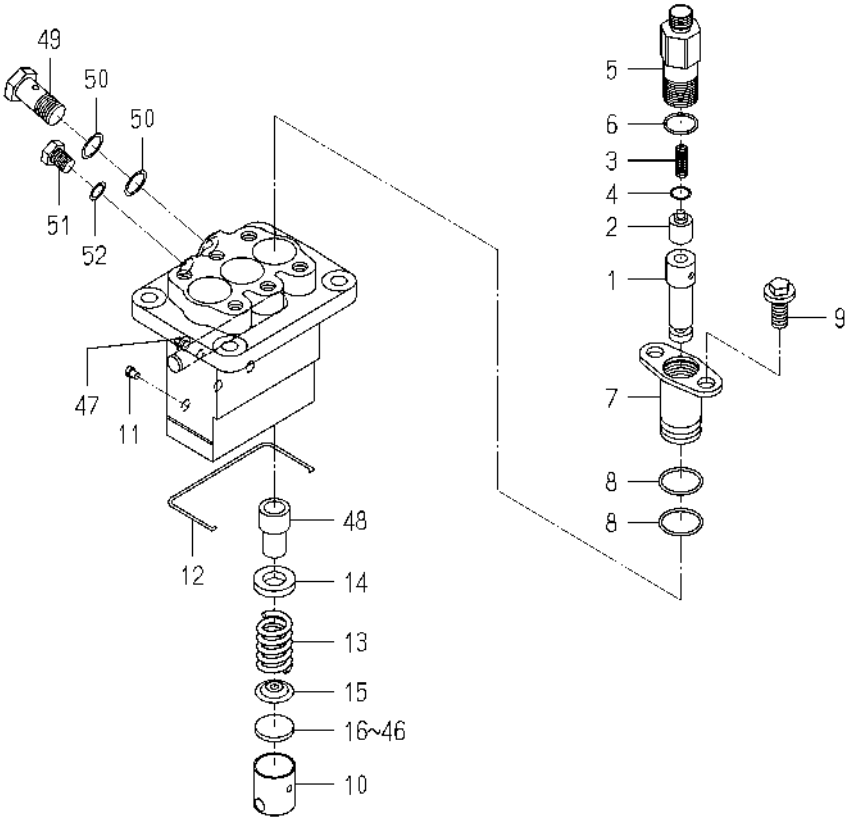

6215-600-104-2E

KEY	PART CODE	DESCRIPTION	SPC	TYPE OF MODEL E3CD VG04		ITC	COL	GRP	REMARKS
1	6215-631-015-00	PLUNGER ASSY	*	3					
2	6215-641-002-00	VALVE,DELIVERY	*	3					
3	6215-643-005-00	SPRING/DELIVERYVALVE	*	3					
4	6215-649-008-00	GASKET	*	3					
5	6215-644-009-00	HOLDER/DELIVERYVALVE	*	3					
6	6215-649-014-00	ORING	*	3					
7	6215-635-004-00	SLEEVEFLANGE	*	3					
8	6215-649-013-00	ORING	*	6					
9	6215-649-011-00	BOLT	*	6					
10	6215-622-003-00	TAPPET	*	3					
11	6215-629-017-00	PIN	*	3					
12	6215-629-035-00	SNAPRING	*	1					
13	6215-634-003-00	SPRING/PLUNGER	*	3					
14	6215-639-008-00	SPRINGSEAT	*	3					
15	6215-639-009-00	SPRINGSEAT	*	3					
16	6215-629-060-00	PLATE/T=2.60	*	1					
17	6215-629-061-00	PLATE/T=2.65	*	1					
18	6215-629-062-00	PLATE/T=2.70	*	1					
19	6215-629-063-00	PLATE/T=2.75	*	1					
20	6215-629-064-00	PLATE/T=2.80	*	1					
21	6215-629-065-00	PLATE/T=2.85	*	1					
22	6215-629-066-00	PLATE/T=2.90	*	1					
23	6215-629-067-00	PLATE/T=2.95	*	1					
24	6215-629-036-00	PLATE/T=3.00	*	1					
25	6215-629-037-00	PLATE/T=3.05	*	1					
26	6215-629-038-00	PLATE/T=3.10	*	1					
27	6215-629-039-00	PLATE/T=3.15	*	1					
28	6215-629-040-00	PLATE/T=3.20	*	1					
29	6215-629-041-00	PLATE/T=3.25	*	1					
30	6215-629-042-00	PLATE/T=3.30	*	1					

FIG. 28 COMPONENT PARTS FOR 6215-600-104-20 ON Fig.21

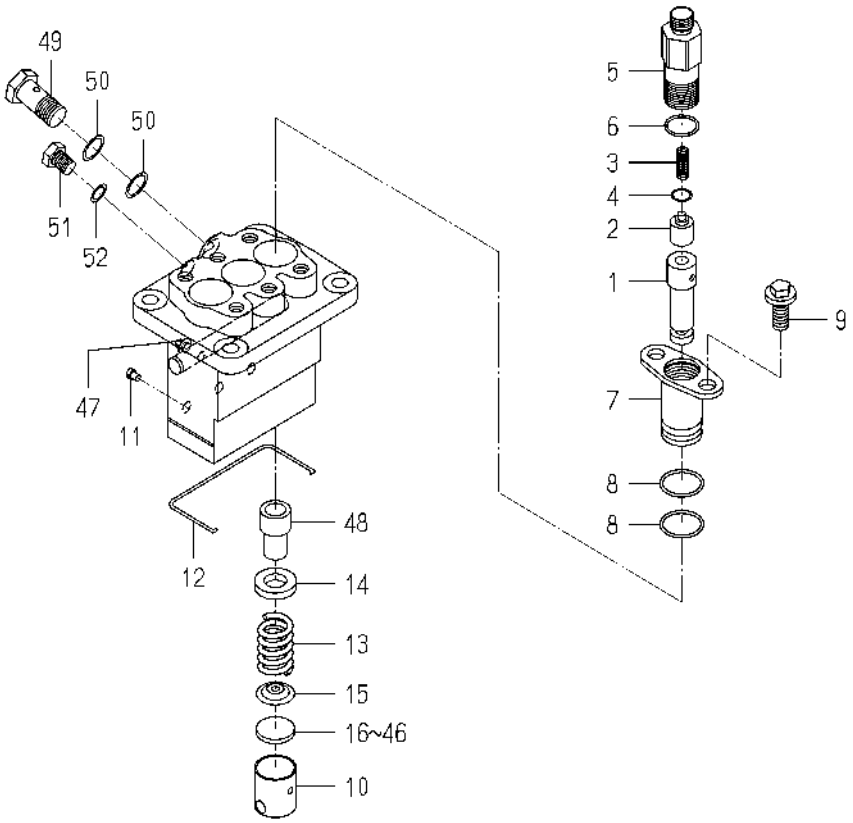

6215-600-104-2E

KEY	PART CODE	DESCRIPTION	SPC	TYPE OF MODEL E3CD VG04		ITC	COL	GRP	REMARKS
31	6215-629-043-00	PLATE/T=3.35	*	1					
32	6215-629-044-00	PLATE/T=3.40	*	1					
33	6215-629-045-00	PLATE/T=3.45	*	1					
34	6215-629-046-00	PLATE/T=3.50	*	1					
35	6215-629-047-00	PLATE/T=3.55	*	1					
36	6215-629-048-00	PLATE/T=3.60	*	1					
37	6215-629-049-00	PLATE/T=3.65	*	1					
38	6215-629-050-00	PLATE/T=3.70	*	1					
39	6215-629-051-00	PLATE/T=3.75	*	1					
40	6215-629-052-00	PLATE/T=3.80	*	1					
41	6215-629-053-00	PLATE/T=3.85	*	1					
42	6215-629-054-00	PLATE/T=3.90	*	1					
43	6215-629-055-00	PLATE/T=3.95	*	1					
44	6215-629-056-00	PLATE/T=4.00	*	1					
45	6215-629-058-00	PLATE/T=4.05	*	1					
46	6215-629-059-00	PLATE/T=4.10	*	1					
47	6215-637-004-00	CONTROLRACK	*	1					
48	6215-635-005-00	CONTROLSLEEVE	*	3					
49	6215-619-023-00	EYEBOLT	*	1					
50	6115-639-008-00	GASKET	*	2					
51	6215-619-024-00	BOLT	*	1					
52	6215-359-006-00	GASKET	*	1					

FIG. 29 COMPONENT PARTS FOR 6281-100-002-50 ON Fig.24

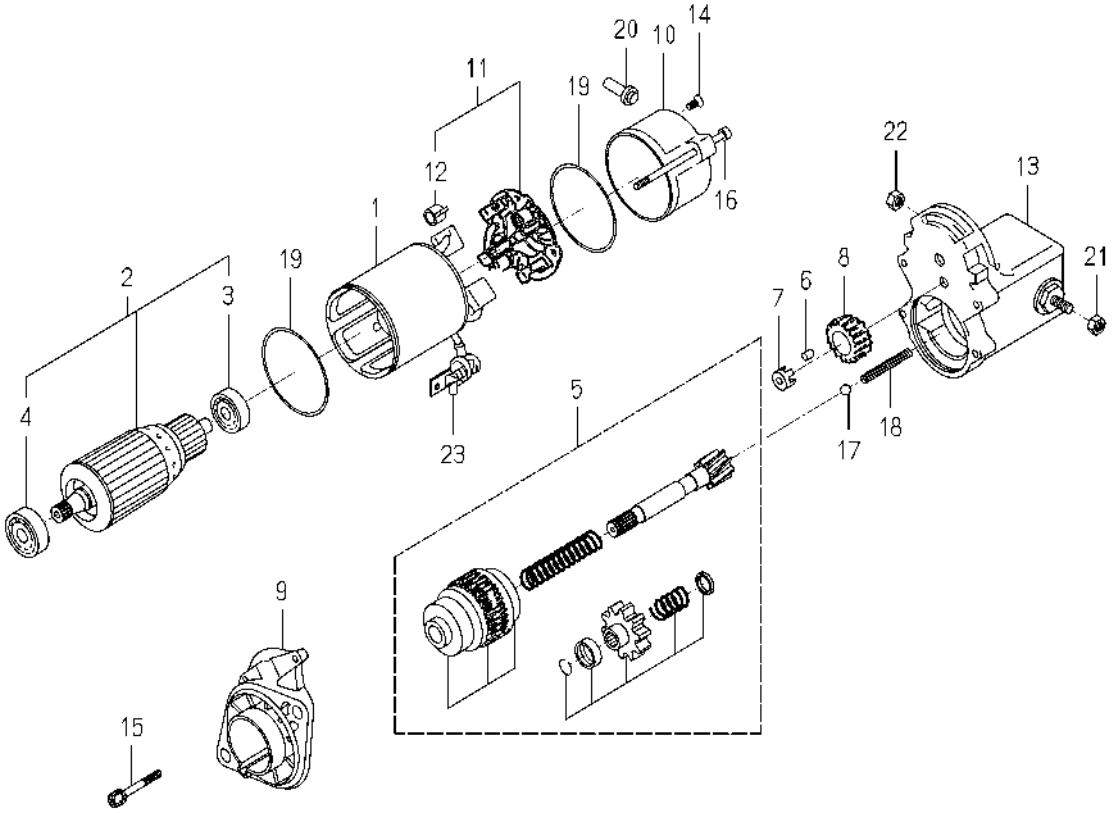

6281-100-002-5M

KEY	PART CODE	DESCRIPTION	SPC	TYPE OF MODEL E3CD VG04		ITC	COL	GRP	REMARKS
1	6281-111-005-00	YOKE/STARTER ASSY	*	1					
2	6281-121-006-00	ARMATURE/STARTE ASSY	*	1					
3	6281-129-038-00	BEARING	*	1					
4	6281-129-039-00	BEARING	*	1					
5	6281-124-007-10	CLUTCH/STARTER ASSY	*	1					
6	6581-129-099-00	RORA	*	5					
7	6281-129-040-00	RETAINER	*	1					
8	6281-123-005-00	PINION/STARTER	*	1					
9	6281-129-041-10	HOUSING/STARTER ASSY	*	1					
10	6281-115-008-00	FRAME/STARTEREND	*	1					
11	6281-116-004-00	HOLDER/STARTER ASSY	*	1					
12	6581-117-007-00	SPRING,BRUSH	*	4					
13	6281-151-025-10	SWITCH/MAGNETIC ASSY	*	1					
14	6281-129-062-00	SCREW	*	2					
15	6281-129-042-00	BOLT/WS	*	2					
16	6281-129-043-00	BOLT/THROUGH	*	2					
17	6581-129-092-00	BALL	*	1					
18	6281-129-044-00	SPRING/RETURN	*	1					
19	6281-129-003-00	O-RING	*	2					
20	6281-115-016-00	BUSHING/DRAIN	*	1					
21	6909-111-508-00	NUT	*	1					
22	6281-229-041-00	NUT	*	1					
23	6281-115-010-00	COVER	*	1					

FIG. 30 COMPONENT PARTS FOR 6281-200-015-00 ON Fig.24

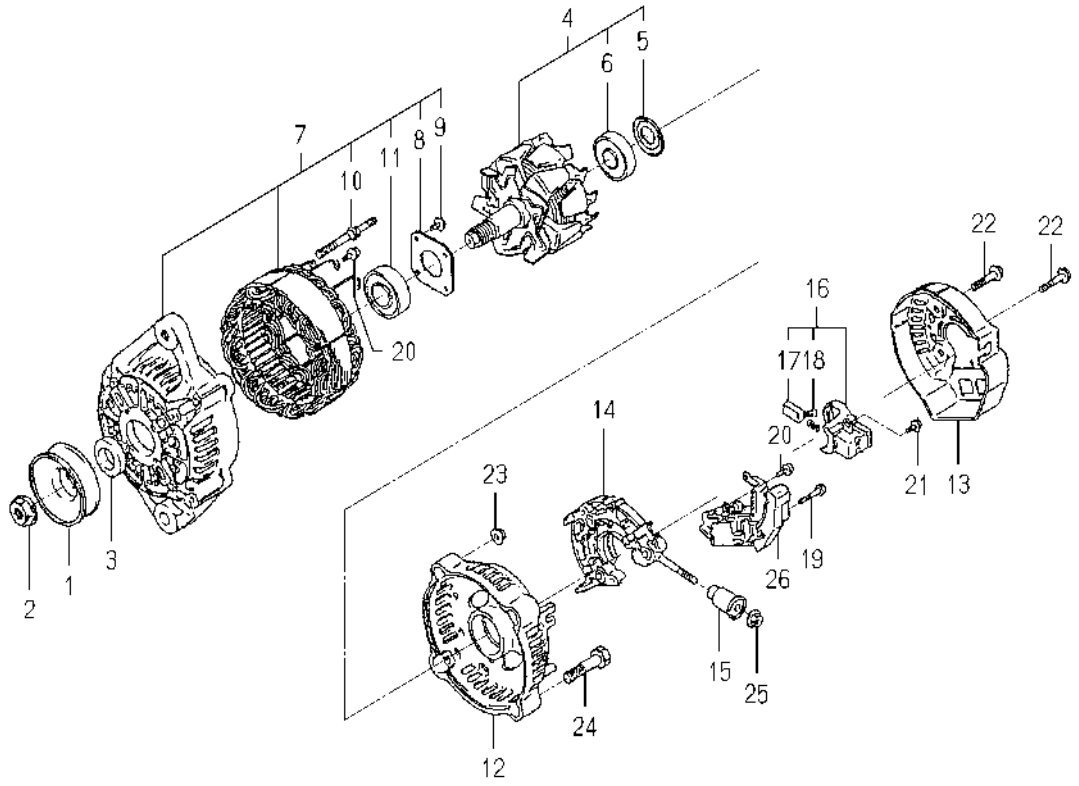

6281-200-015-0C

KEY	PART CODE	DESCRIPTION	SPC	TYPE OF MODEL E3CD VG04		ITC	COL	GRP	REMARKS
1	6281-222-002-00	PULLEY	*	1					
2	6281-229-002-00	NUT	*	1					
3	6281-229-003-00	COLLOR	*	1					
4	6281-221-004-00	ROTOR ASSY	*	1					
5	6281-229-004-00	COVER,BEARING	*	1					
6	6281-229-032-00	BEARING/BALL	*	1					
7	6281-213-013-00	FRAME/DRIVEEND ASSY	*	1					
8	6281-229-006-00	PLATE	*	1					
9	6281-229-007-00	BOLT	*	4					
10	6281-229-008-00	BOLT	*	2					
11	6281-229-033-00	BEARING/BALL	*	1					
12	6281-214-007-00	FRAME/END/REAR	*	1					
13	6281-214-008-00	COVER/END/REAR	*	1					
14	6281-229-040-00	HOLDER/RECTIFIE ASSY	*	1					
15	6281-229-011-00	BUSH	*	1					
16	6281-217-002-00	HOLDER/BRUSH ASSY	*	1					
17	6281-215-001-00	BRUSH	*	2					
18	6281-216-001-00	SPRING	*	2					
19	6281-229-012-00	BOLT	*	2					
20	6281-229-013-00	BOLT	*	6					
21	6281-229-014-00	BOLT	*	1					
22	6281-229-015-00	BOLT	*	3					
23	6281-229-016-00	NUT	*	2					
24	6281-229-017-00	BOLT	*	2					
25	6281-229-018-00	NUT	*	1					
26	6281-271-008-00	REGULATOR ASSY	*	1					

C H A S S I S

FIG. 1 BRACKET(ENGINE)SYSTEM (SF235F TYPE)

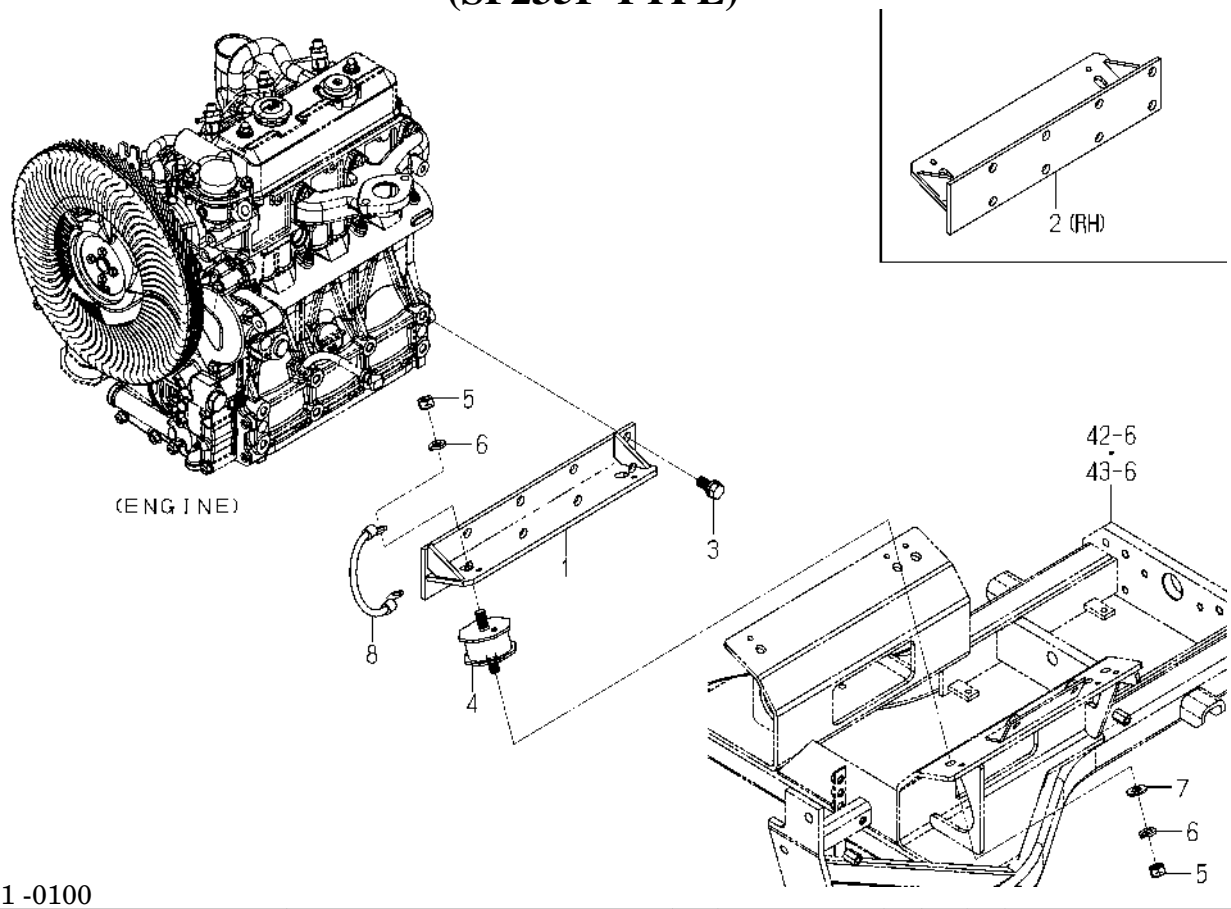

1832-101 -0100

KEY	PART CODE	DESCRIPTION	SPC	TYPE OF MODEL SF224F	TYPE OF MODEL SF235F	ITC	COL	GRP	REMARKS
1	1832-101-210-00	BRACKET/MOUNT/L COMP	*		1				
2	1832-101-220-00	BRACKET/MOUNT/R COMP	*		1				
3	6901-931-225-00	BOLT,SEMS/M12X25/7T	*		16				
4	3623-150-003-10	INSULATOR/MOUNT/LH	*		4				
5	V304-260-012-00	NUT/M12	*		8				
6	V401-160-012-00	WASHER,SP/M12	*		8				
7	V411-260-012-00	WASHER,PL/M12	*		4				
8	3623-263-001-00	WIRE,LEAD	*		1				

FIG. 2 BRACKET(ENGINE)SYSTEM (SF224F TYPE)

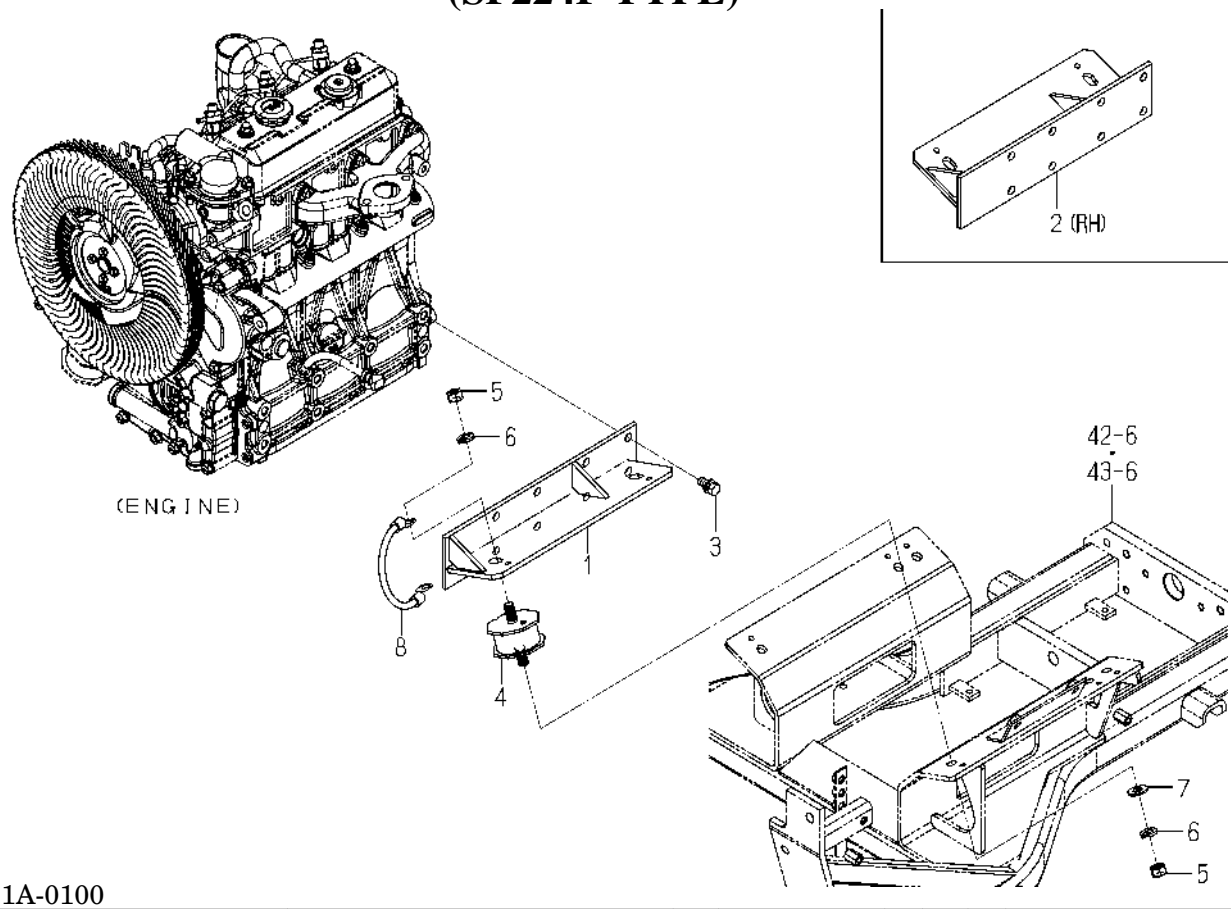

1832-101A-0100

KEY	PART CODE	DESCRIPTION	SPC	TYPE OF MODEL SF224F	TYPE OF MODEL SF235F	ITC	COL	GRP	REMARKS
1	1832-101-510-00	BRACKET/MOUNT/L COMP	*	1					
2	1832-101-520-00	BRACKET/MOUNT/R COMP	*	1					
3	6901-911-020-00	BOLT,SEMS/M10X20,7T	*	16					
4	3623-150-003-10	INSULATOR/MOUNT/LH	*	4					
5	V304-260-012-00	NUT/M12	*	8					
6	V401-160-012-00	WASHER,SP/M12	*	8					
7	V411-260-012-00	WASHER,PL/M12	*	4					
8	3623-263-001-00	WIRE,LEAD	*	1					

FIG. 3 RADIATOR SYSTEM(SF235F TYPE)

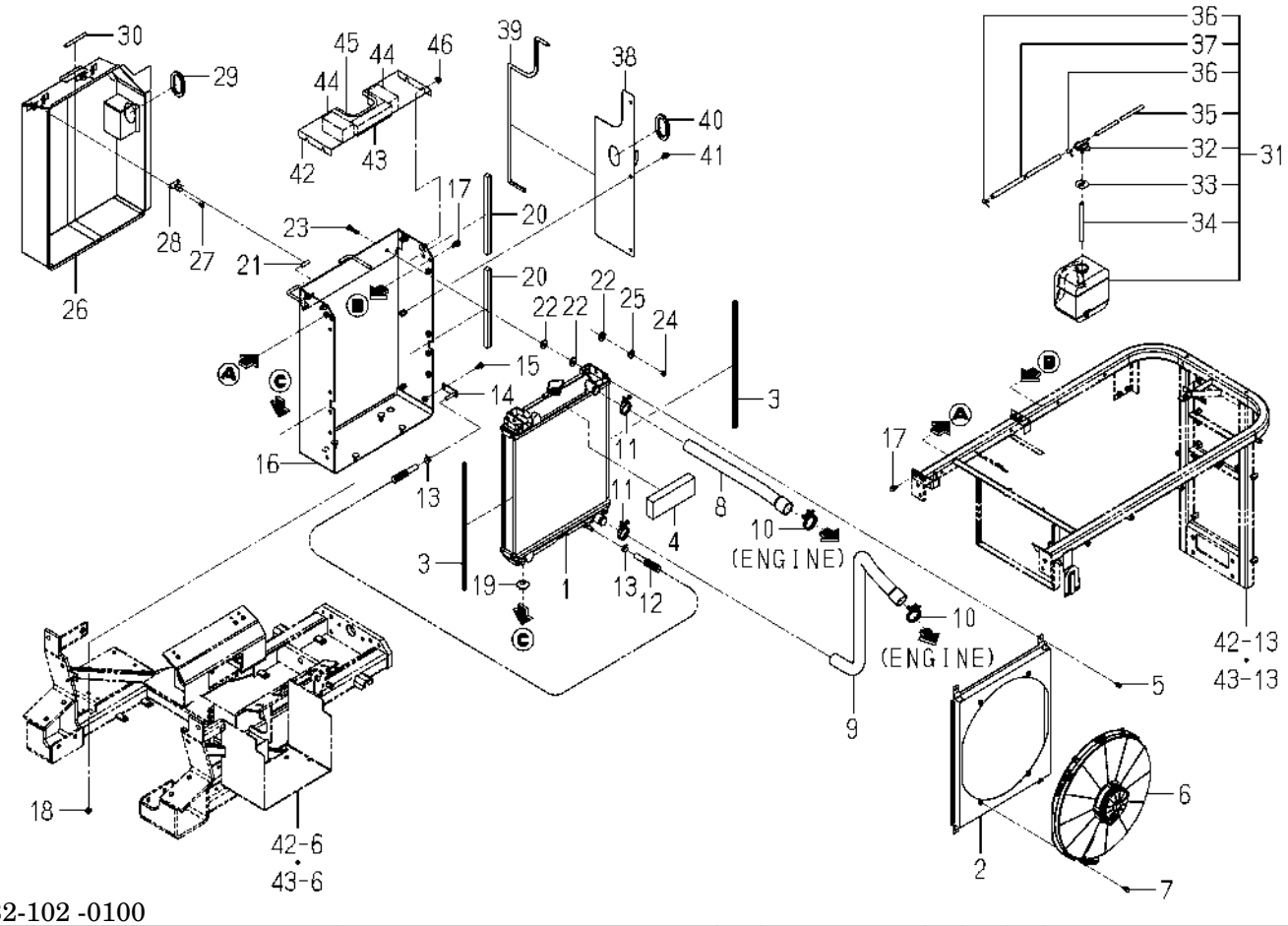

1832-102 -0100

KEY	PART CODE	DESCRIPTION	SPC	TYPE OF MODEL SF224F	TYPE OF MODEL SF235F	ITC	COL	GRP	REMARKS
1	1832-102-330-00	RADIATOR ASSY	*		1				
2	1832-102-220-00	SHROUD COMP	*		1				
3	1770-102-004-00	INSULATOR/10X10X450	*		2				
4	1809-102-027-00	INSULATOR	*		1				
5	V210-360-601-60	BOLT,SP/M6X16	*		4				
6	1832-102-310-00	FAN/RADIATOR/23 ASSY	*		1				
7	V210-360-601-60	BOLT,SP/M6X16	*		4				
8	1832-102-004-00	HOSE/RADIATOR/IN/235	*		1				
9	1832-102-005-00	HOSE/RADIATOR/OUT/23	*		1				
10	J061-236-044-00	CLAMP/WIRE/36-44	*		2				
11	J061-230-038-00	CLAMP/WIRE/30-38	*		2				
12	1728-102-220-00	HOSE/290 ASSY	*		1				
13	J062-147-159-00	CLIP/HOSE/14.7-15.9	*		2				
14	1809-102-330-00	STAY/PLUG	*		1				
15	V231-360-801-60	FLANGEBOLT/M8X16	*		1				
16	1832-102-210-20	FRAME/RADIATOR COMP	*		1				
17	V211-360-802-00	BOLT,SP/M8X20	*		4				
18	V362-260-008-00	NUT/WASHER/M8	*		4				
19	1421-603-004-00	BUSH,LEVER	*		2				
20	1752-102-005-00	INSULATOR/15X15X280	*		2				
21	1716-601-009-00	TUBE/07X09X30	*		2				
22	1423-616-004-00	CUSHION/RUBBER/10X25	*		6				
23	V201-260-803-50	BOLT/M8X35	*		2				
24	1719-312-001-00	U-NUT	*		2				
25	4101-102-038-00	WASHER/24X9X3.2	*		2				
26	1832-102-230-10	COVER/RADIATOR COMP	*		1		7F		
27	V120-366-001-20	SCREW,SP/M6X12	*		4				
28	1729-604-003-00	SPRING	*		2				
29	1724-102-012-00	TRIM/188	*		1				
30	1685-604-003-00	INSULATOR/90	*		1				

FIG. 3 RADIATOR SYSTEM(SF235F TYPE)

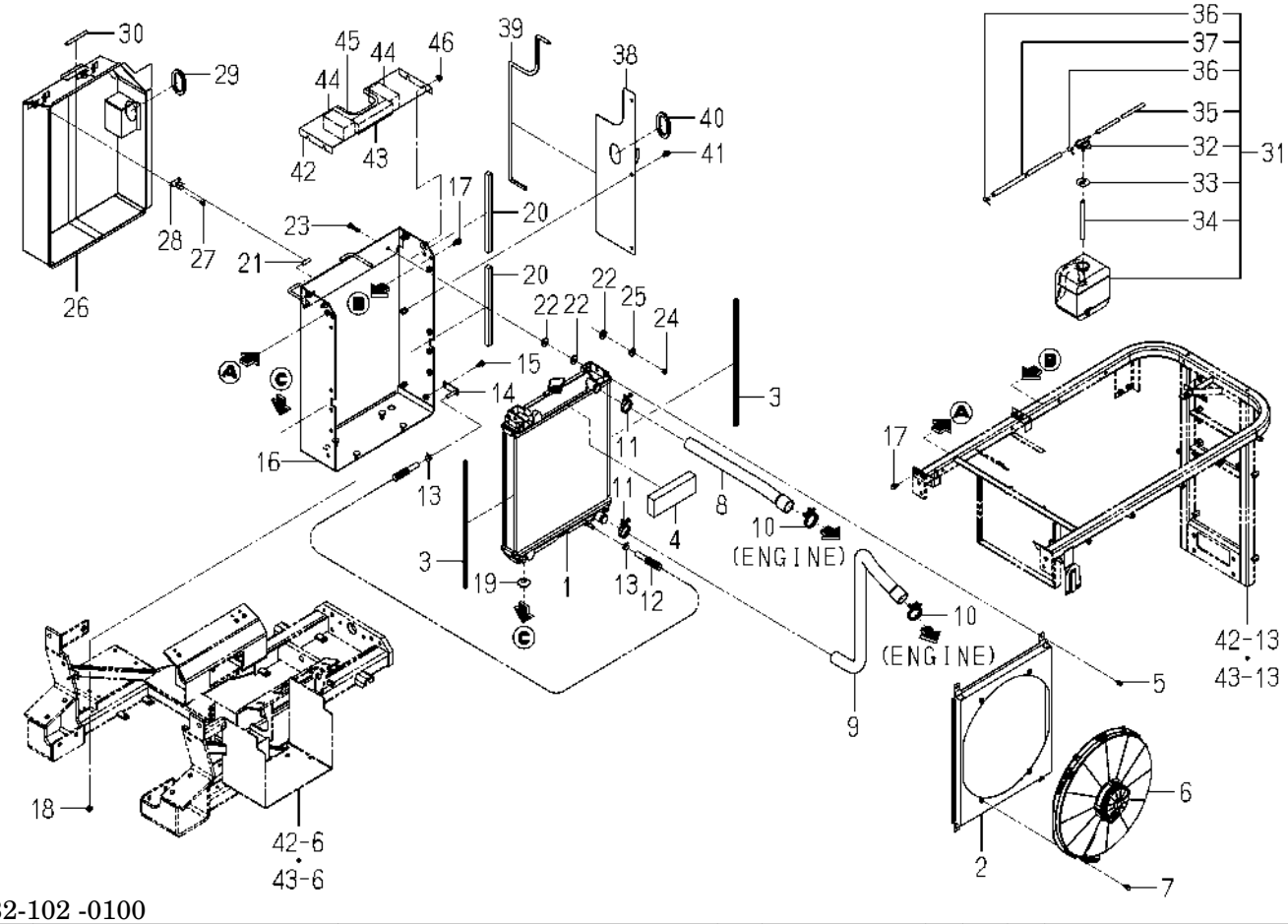

1832-102 -0100

KEY	PART CODE	DESCRIPTION	SPC	TYPE OF MODEL SF224F	TYPE OF MODEL SF235F	ITC	COL	GRP	REMARKS
31	1690-102-210-00	RESERVETANK ASSY	*		1				
32	1690-102-212-00	CAP	*		1				
33	1690-102-213-00	PACKING	*		1				
34	1690-102-214-00	HOSE/RUBBER	*		1				
35	1690-102-215-00	HOSE/RUBBER	*		1				
36	1690-102-216-00	CLUMP	*		2				
37	1690-102-217-00	HOSE/RUBBER	*		1				
38	1832-102-240-00	PLATE/GUARD/RADIATOR	*		1				
39	2508-350-007-10	INSULATOR/791	*		1				
40	2514-102-008-00	TRIM/198	*		1				
41	V211-360-801-60	BOLT,SP/M8X16	*		3				
42	1832-102-001-00	COVER/RADIATOR/UPPER	*		1		7F		
43	1729-602-006-00	INSULATOR/30X35X150	*		1				
44	1796-604-073-00	INSULRATOR/45X45X90	*		2				
45	3656-202-006-10	INSULATOR/220	*		1				
46	V362-260-008-00	NUT/WASHER/M8	*		4				

FIG. 4 RADIATOR SYSTEM(SF224F TYPE)

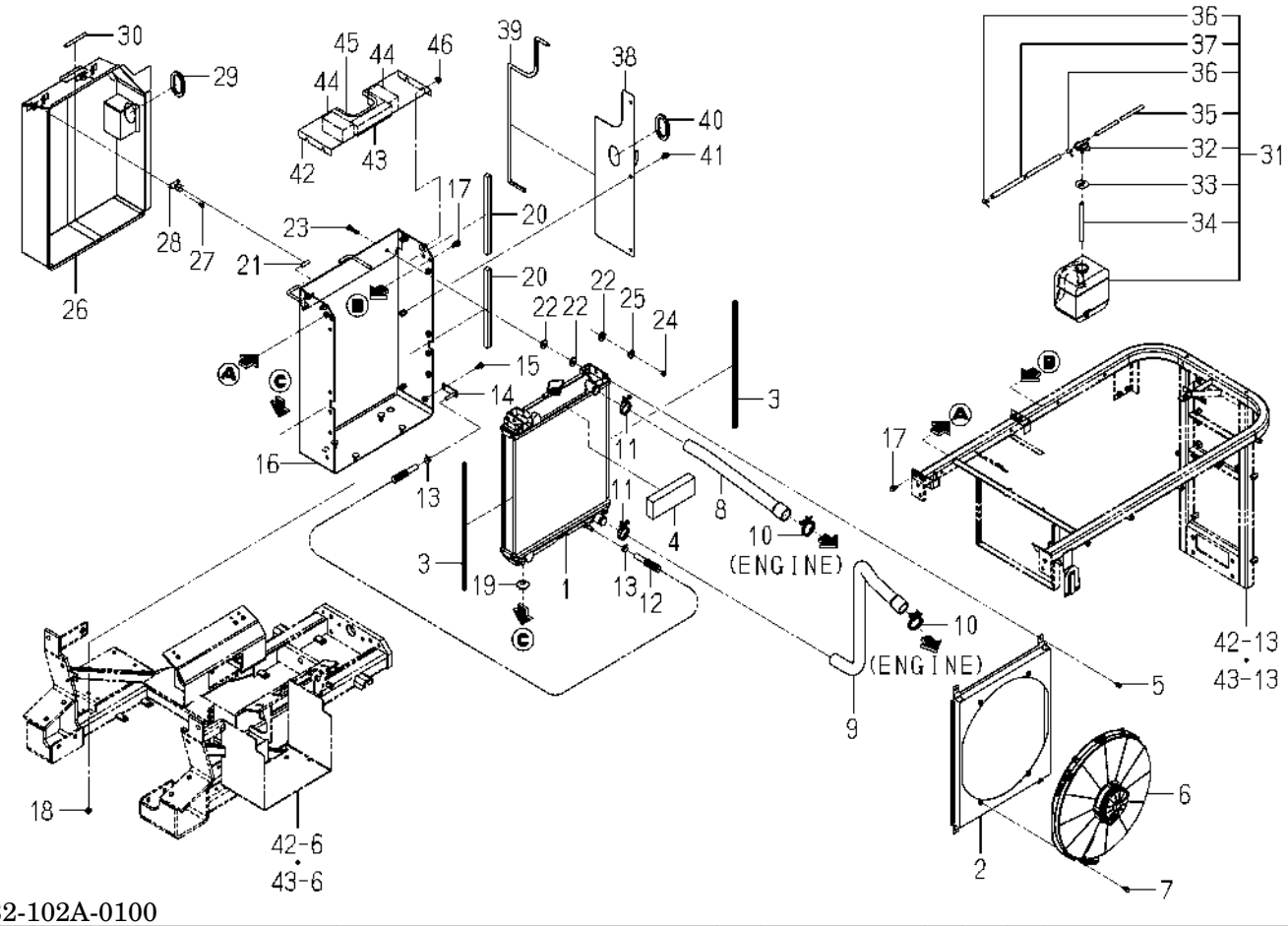

1832-102A-0100

KEY	PART CODE	DESCRIPTION	SPC	TYPE OF MODEL SF224F	TYPE OF MODEL SF235F	ITC	COL	GRP	REMARKS
1	1832-102-330-00	RADIATOR ASSY	*	1					
2	1832-102-220-00	SHROUD COMP	*	1					
3	1770-102-004-00	INSULATOR/10X10X450	*	2					
4	1809-102-027-00	INSULATOR	*	1					
5	V210-360-601-60	BOLT,SP/M6X16	*	4					
6	1832-102-320-00	FAN/RADIATOR/22 ASSY	*	1					
7	V210-360-601-60	BOLT,SP/M6X16	*	4					
8	1832-102-051-00	HOSE/RADIATOR/IN/224	*	1					
9	1832-102-052-00	HOSE/RADIATOR/OUT/22	*	1					
10	J061-236-044-00	CLAMP/WIRE/36-44	*	2					
11	J061-230-038-00	CLAMP/WIRE/30-38	*	2					
12	1728-102-220-00	HOSE/290 ASSY	*	1					
13	J062-147-159-00	CLIP/HOSE/14.7-15.9	*	2					
14	1809-102-330-00	STAY/PLUG	*	1					
15	V231-360-801-60	FLANGEBOLT/M8X16	*	1					
16	1832-102-210-20	FRAME/RADIATOR COMP	*	1					
17	V211-360-802-00	BOLT,SP/M8X20	*	4					
18	V362-260-008-00	NUT/WASHER/M8	*	4					
19	1421-603-004-00	BUSH,LEVER	*	2					
20	1752-102-005-00	INSULATOR/15X15X280	*	2					
21	1716-601-009-00	TUBE/07X09X30	*	2					
22	1423-616-004-00	CUSHION/RUBBER/10X25	*	6					
23	V201-260-803-50	BOLT/M8X35	*	2					
24	1719-312-001-00	U-NUT	*	2					
25	4101-102-038-00	WASHER/24X9X3.2	*	2					
26	1832-102-230-10	COVER/RADIATOR COMP	*	1			7F		
27	V120-366-001-20	SCREW,SP/M6X12	*	4					
28	1729-604-003-00	SPRING	*	2					
29	1724-102-012-00	TRIM/188	*	1					
30	1685-604-003-00	INSULATOR/90	*	1					

FIG. 4 RADIATOR SYSTEM(SF224F TYPE)

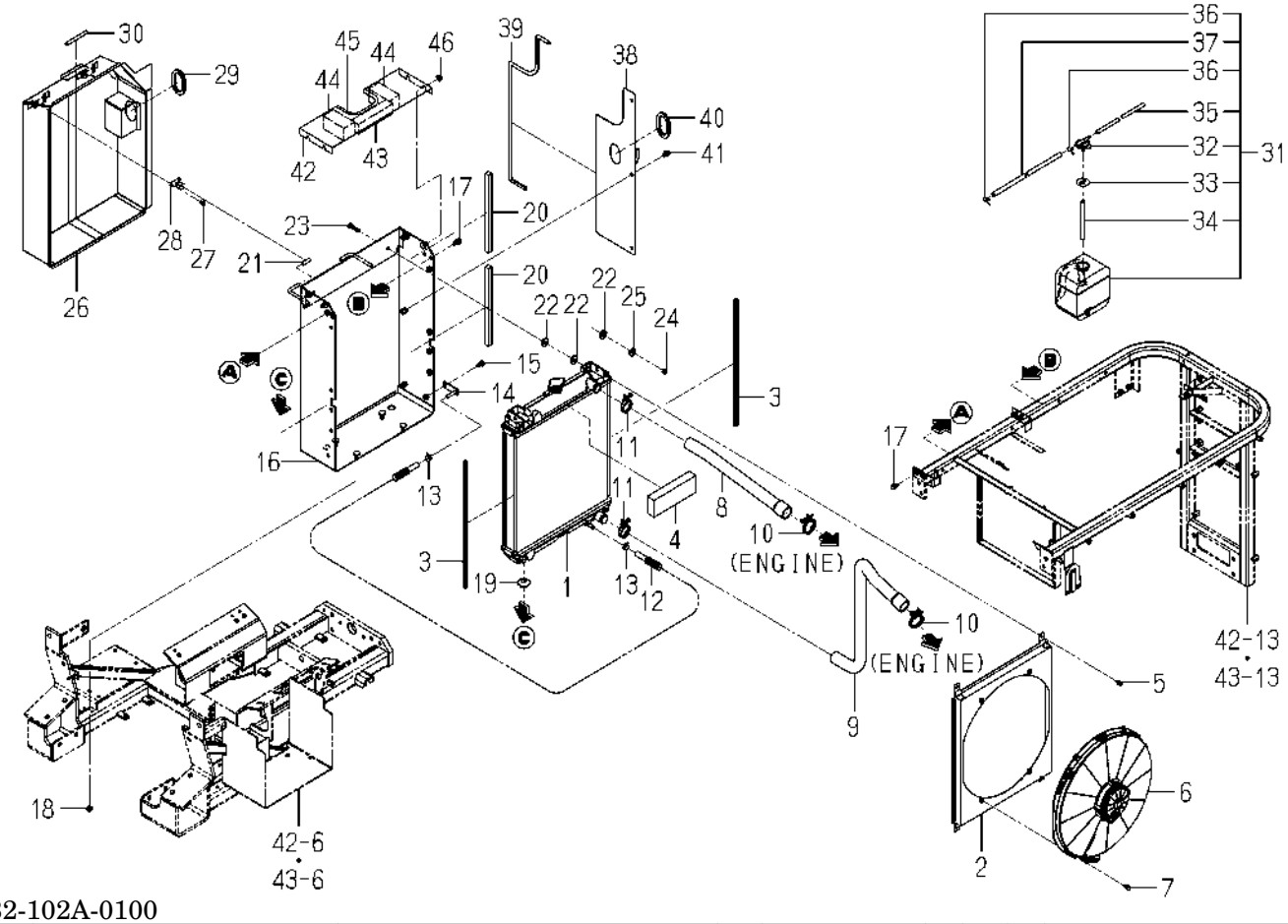

1832-102A-0100

KEY	PART CODE	DESCRIPTION	SPC	TYPE OF MODEL SF224F	TYPE OF MODEL SF235F	ITC	COL	GRP	REMARKS
31	1690-102-210-00	RESERVETANK ASSY	*	1					
32	1690-102-212-00	CAP	*	1					
33	1690-102-213-00	PACKING	*	1					
34	1690-102-214-00	HOSE/RUBBER	*	1					
35	1690-102-215-00	HOSE/RUBBER	*	1					
36	1690-102-216-00	CLUMP	*	2					
37	1690-102-217-00	HOSE/RUBBER	*	1					
38	1832-102-240-00	PLATE/GUARD/RADIATOR	*	1					
39	2508-350-007-10	INSULATOR/791	*	1					
40	2514-102-008-00	TRIM/198	*	1					
41	V211-360-801-60	BOLT,SP/M8X16	*	3					
42	1832-102-001-00	COVER/RADIATOR/UPPER	*	1			7F		
43	1729-602-006-00	INSULATOR/30X35X150	*	1					
44	1796-604-073-00	INSULRATOR/45X45X90	*	2					
45	3656-202-006-10	INSULATOR/220	*	1					
46	V362-260-008-00	NUT/WASHER/M8	*	4					

FIG. 5 MUFFLER SYSTEM(SF235F TYPE)

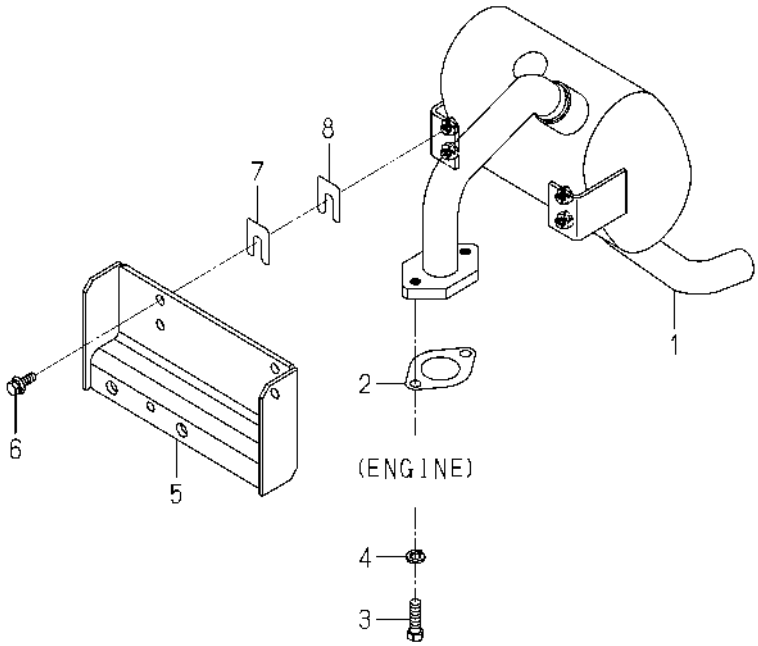

1832-103 -0100

KEY	PART CODE	DESCRIPTION	SPC	TYPE OF MODEL		ITC	COL	GRP	REMARKS
				SF224F	SF235F				
1	1832-103-300-00	MUFFLER COMP	*		1				
2	1832-103-003-00	GASKET	*		1				
3	V203-361-003-00	BOLT/M10X30/7T,P1.25	*		2				
4	V401-160-010-00	WASHER,SP/M10	*		2				
5	1832-103-210-10	BRACKET/MUFFLER/235	*		1				
6	V211-660-802-50	BOLT,SP/M8X25/7T	*		4				
7	1725-103-002-00	SHIM/0.6/B	*		4				
8	1782-103-051-00	SHIM/0.3	*		4				

FIG. 6 MUFFLER SYSTEM(SF224F TYPE)

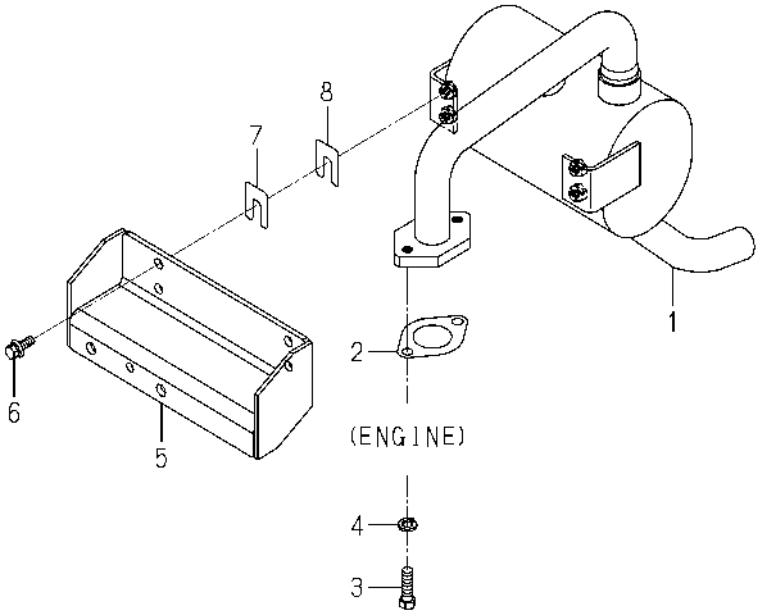

1832-103A-0100

KEY	PART CODE	DESCRIPTION	SPC	TYPE OF MODEL SF224F	TYPE OF MODEL SF235F	ITC	COL	GRP	REMARKS
1	1832-103-500-00	MUFFLER COMP	*	1					
2	1832-103-003-00	GASKET	*	1					
3	V203-361-003-00	BOLT/M10X30/7T,P1.25	*	2					
4	V401-160-010-00	WASHER,SP/M10	*	2					
5	1832-103-510-10	BRACKET/MUFFLER/224	*	1					
6	V211-660-802-50	BOLT,SP/M8X25/7T	*	4					
7	1725-103-002-00	SHIM/0.6/B	*	4					
8	1782-103-051-00	SHIM/0.3	*	4					

FIG. 7 CLEANER(AIR)SYSTEM(SF235F TYPE)

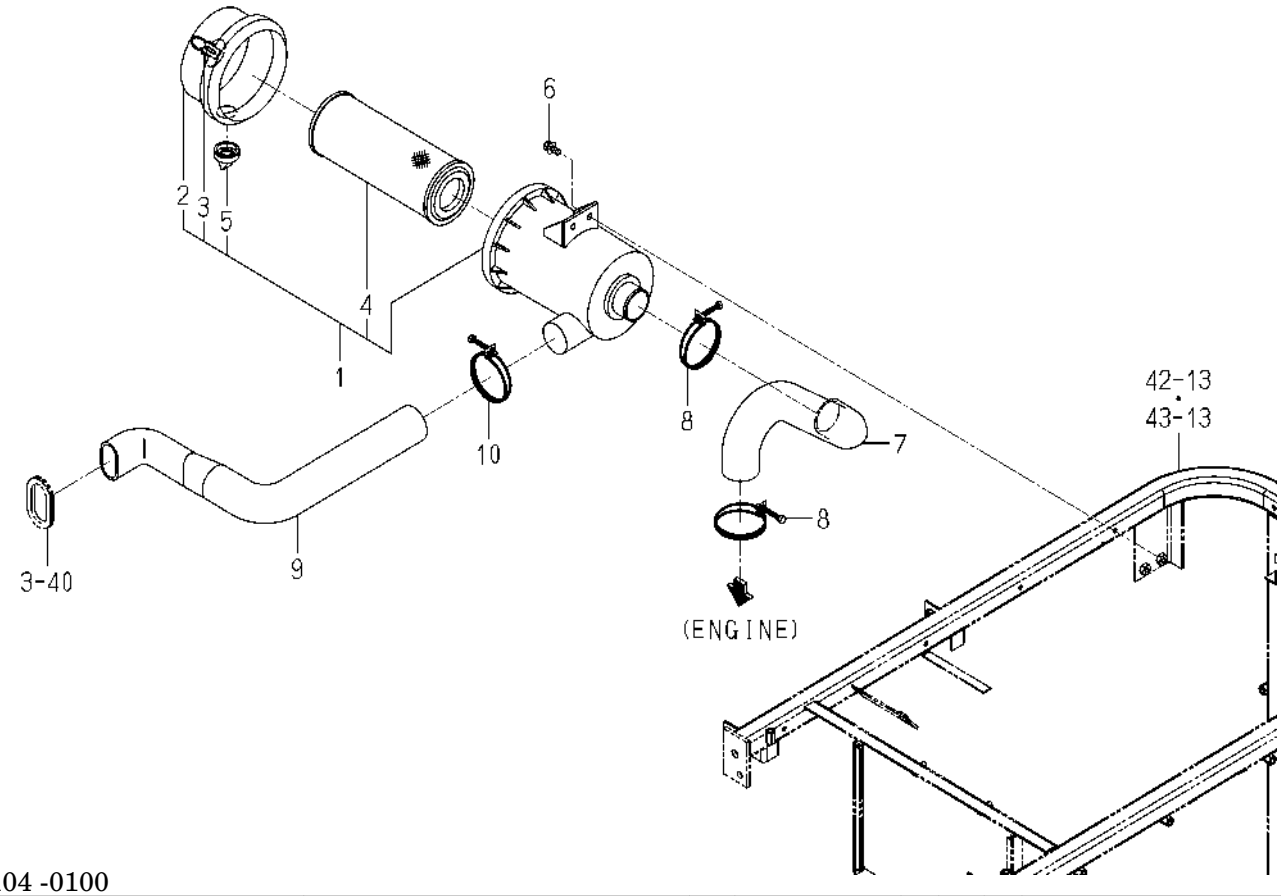

1832-104 -0100

KEY	PART CODE	DESCRIPTION	SPC	TYPE OF MODEL SF224F	TYPE OF MODEL SF235F	ITC	COL	GRP	REMARKS
1	1650-104-200-10	CLEANER/AIR ASSY	*		1				
2	1650-104-210-00	COVER ASSY	*		1				
3	1650-104-201-00	CLIP	*		2				
4	1650-104-203-10	ELEMENT ASSY	*		1				
5	1544-104-205-00	VALVE	*		1				
6	V211-360-802-00	BOLT,SP/M8X20	*		2				
7	1832-104-001-00	HOSE/CLEANER/OUTLET/	*		1				
8	J061-252-063-00	CLAMP/WIRE/52-63	*		2				
9	1832-104-002-00	HOSE/CLEANER/INLET	*		1				
10	J061-252-063-00	CLAMP/WIRE/52-63	*		1				

FIG. 8 CLEANER(AIR)SYSTEM(SF224F TYPE)

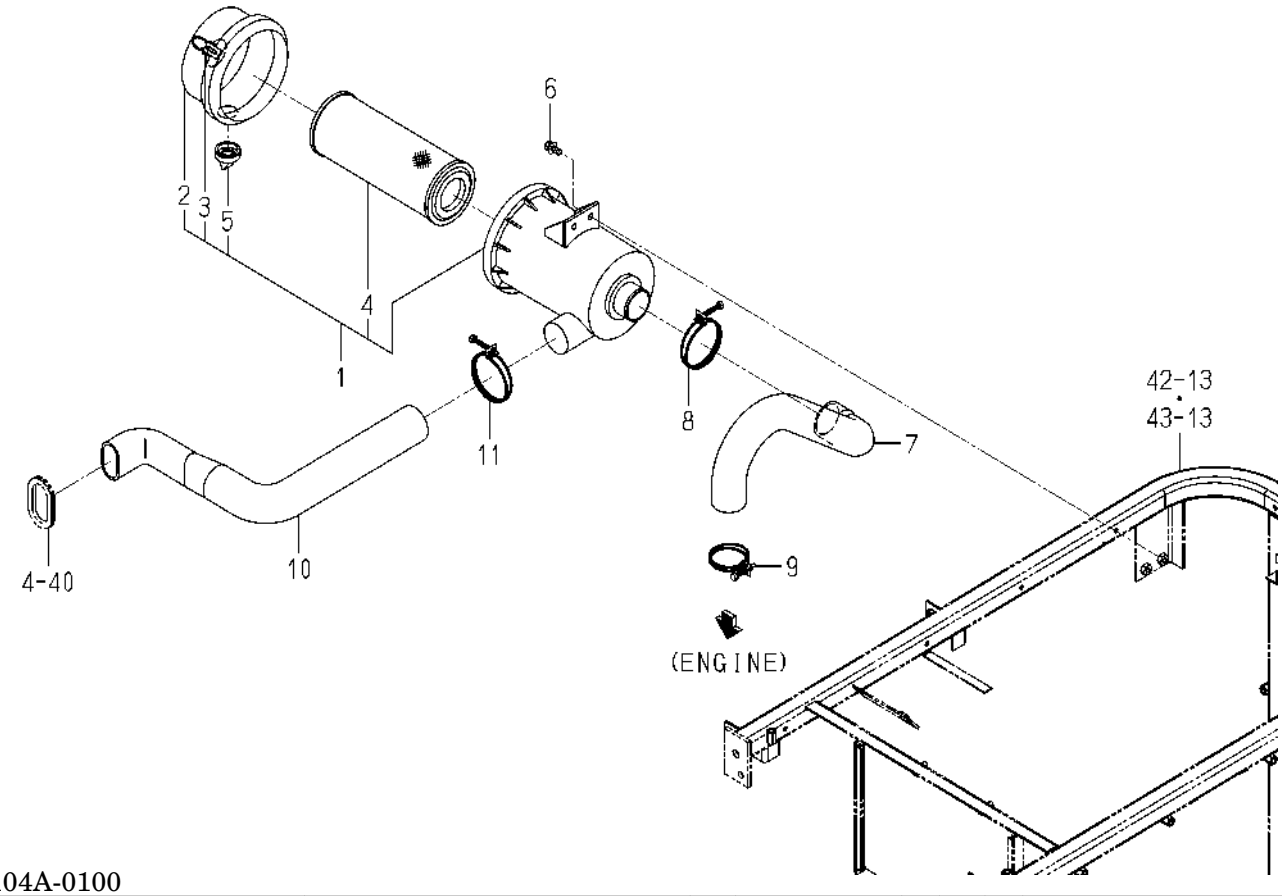

1832-104A-0100

KEY	PART CODE	DESCRIPTION	SPC	TYPE OF MODEL SF224F	TYPE OF MODEL SF235F	ITC	COL	GRP	REMARKS
1	1650-104-200-10	CLEANER/AIR ASSY	*	1					
2	1650-104-210-00	COVER ASSY	*	1					
3	1650-104-201-00	CLIP	*	2					
4	1650-104-203-10	ELEMENT ASSY	*	1					
5	1544-104-205-00	VALVE	*	1					
6	V211-360-802-00	BOLT,SP/M8X20	*	2					
7	1832-104-051-00	HOSE/CLEANER/OUTLET/	*	1					
8	J061-252-063-00	CLAMP/WIRE/52-63	*	1					
9	J061-247-055-00	CLAMP/WIRE/47-55	*	1					
10	1832-104-002-00	HOSE/CLEANER/INLET	*	1					
11	J061-252-063-00	CLAMP/WIRE/52-63	*	1					

FIG. 9 PIPING(FUEL)SYSTEM

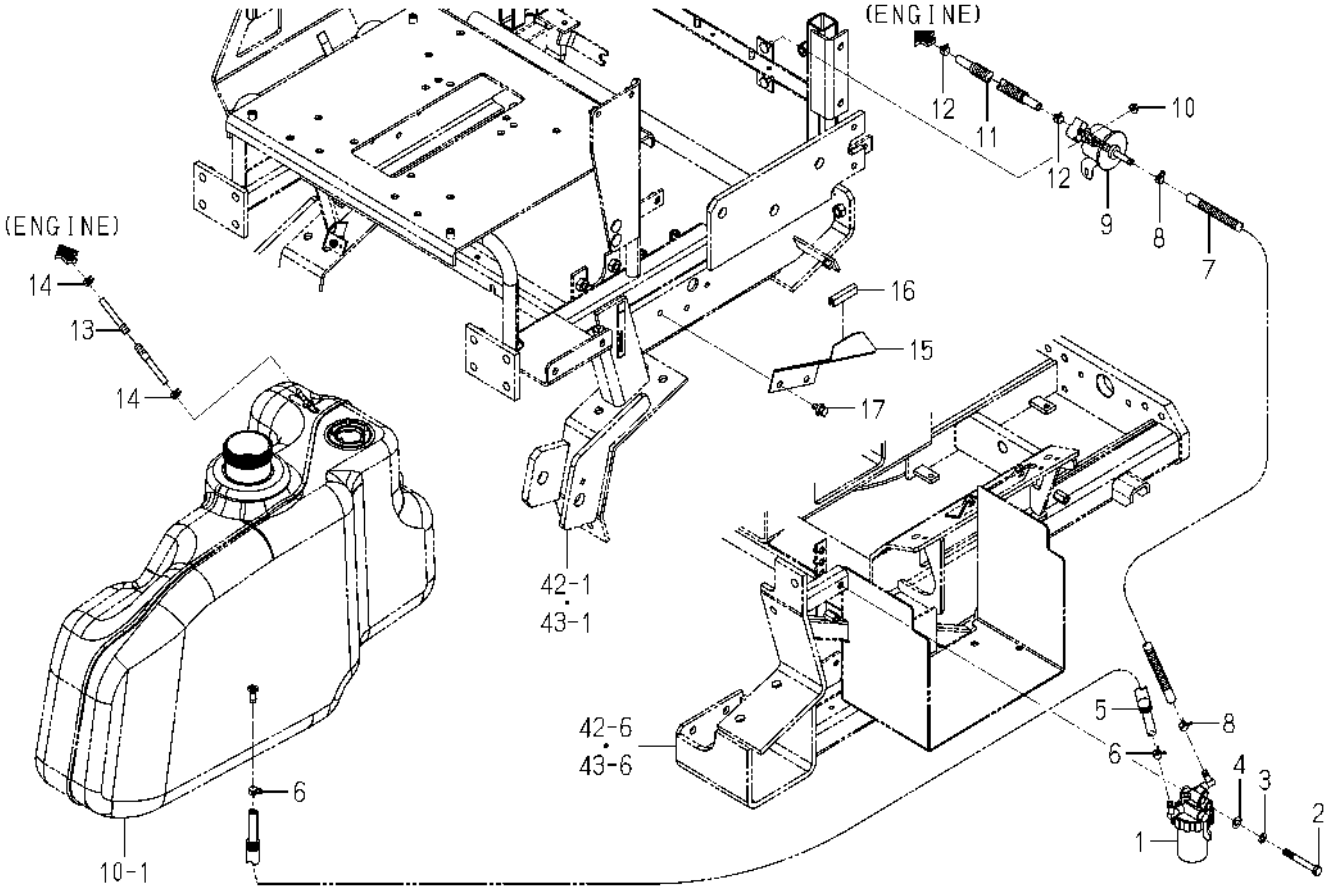

1832-105 -0100

KEY	PART CODE	DESCRIPTION	SPC	TYPE OF MODEL SF224F	TYPE OF MODEL SF235F	ITC	COL	GRP	REMARKS
1	1672-105-210-10	FILTER/FUEL ASSY	*	1	1				FIG 083
2	V201-260-806-50	BOLT/M8X65	*	1	1				
3	V401-160-008-00	WASHER,SP/M8	*	1	1				
4	V411-260-008-00	WASHER,PL/M8	*	1	1				
5	1771-105-001-00	HOSE/08X13X600	*	1	1				
6	J062-119-126-00	CLIP/HOSE/11.9-12.6	*	2	2				
7	1716-105-001-00	HOSE/08X13X300	*	1	1				
8	J062-119-126-00	CLIP/HOSE/11.9-12.6	*	2	2				
9	3829-311-200-10	PUMP/FUEL ASSY	*	1	1				
10	V360-260-006-00	NUT/WASHER/M6	*	2	2				
11	1725-105-330-10	HOSE/07X12X1250 ASSY	*	1	1				
12	J062-111-120-00	CLIP/HOSE/11.1-12.0	*	2	2				
13	1646-111-210-20	HOSE/FUEL/2450 ASSY	*	1	1				
14	J062-087-093-00	CLIP/HOSE/8.7-9.3	*	2	2				
15	1832-105-001-00	GUARD/HOSE	*	1	1				
16	3666-202-005-10	PAD/50	*	1	1				
17	V211-360-801-60	BOLT,SP/M8X16	*	2	2				

FIG. 10 TANK(FUEL)SYSTEM

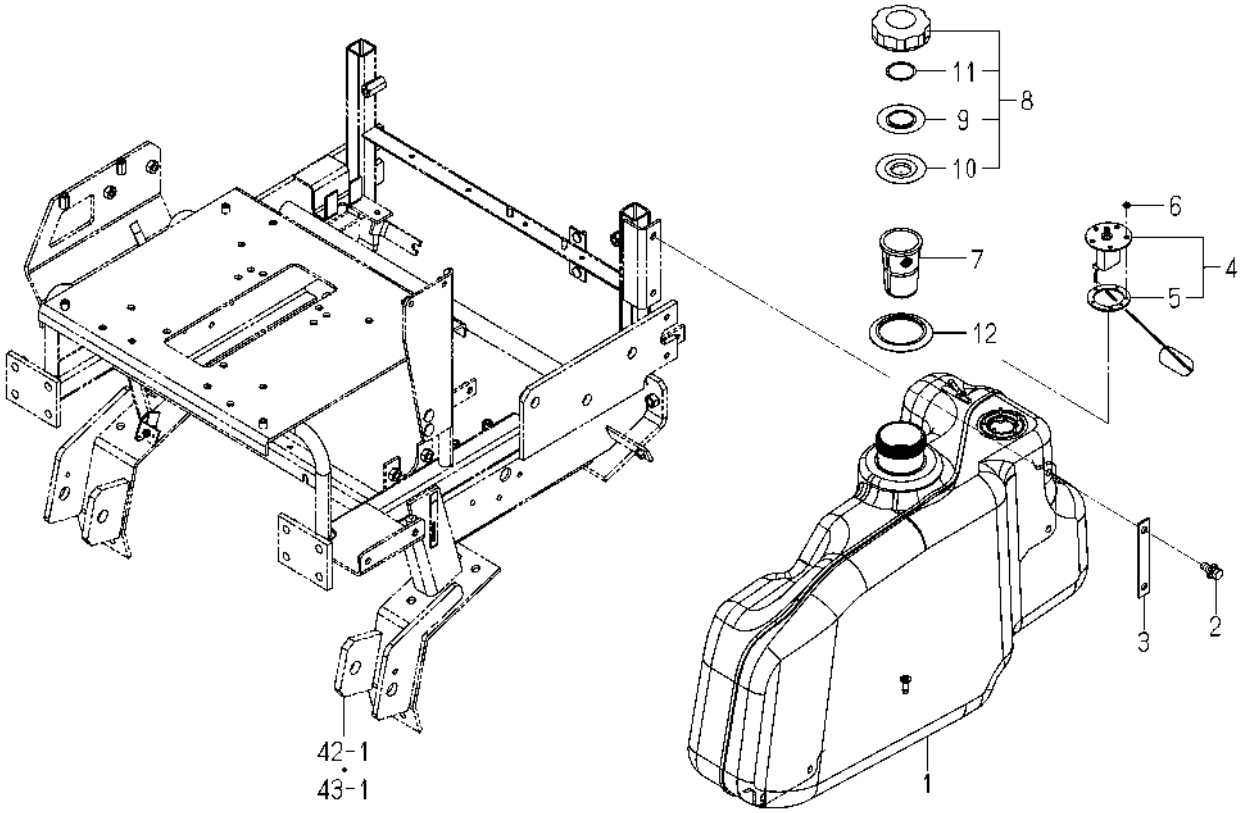

1832-111 -0100

KEY	PART CODE	DESCRIPTION	SPC	TYPE OF MODEL SF224F	TYPE OF MODEL SF235F	ITC	COL	GRP	REMARKS
1	1832-111-001-00	TANK/FUEL	*	1	1				
2	V211-361-003-00	BOLT,SP/M10X30	*	4	4				
3	1809-111-002-00	PLATE/I/22X130	*	2	2				
4	1755-111-300-00	GAUGE/FUEL ASSY	*	1	1				
5	1416-621-037-00	PACKING/RUBBER	*	1	1				
6	V360-260-004-00	NUT/WASHER/M4	*	5	5				
7	1729-111-006-10	FILTER/FUEL	*	1	1				
8	1774-111-310-10	CAP/NONLEAK ASSY	*	1	1				
9	1729-111-283-00	PLATE	*	1	1				
10	1729-111-284-00	PACKING	*	1	1				
11	1774-111-311-00	PACKINGA	*	1	1				
12	1770-111-004-00	COVER/TANK	*	1	1				

FIG. 11 BATTERY SYSTEM(SF235F TYPE)

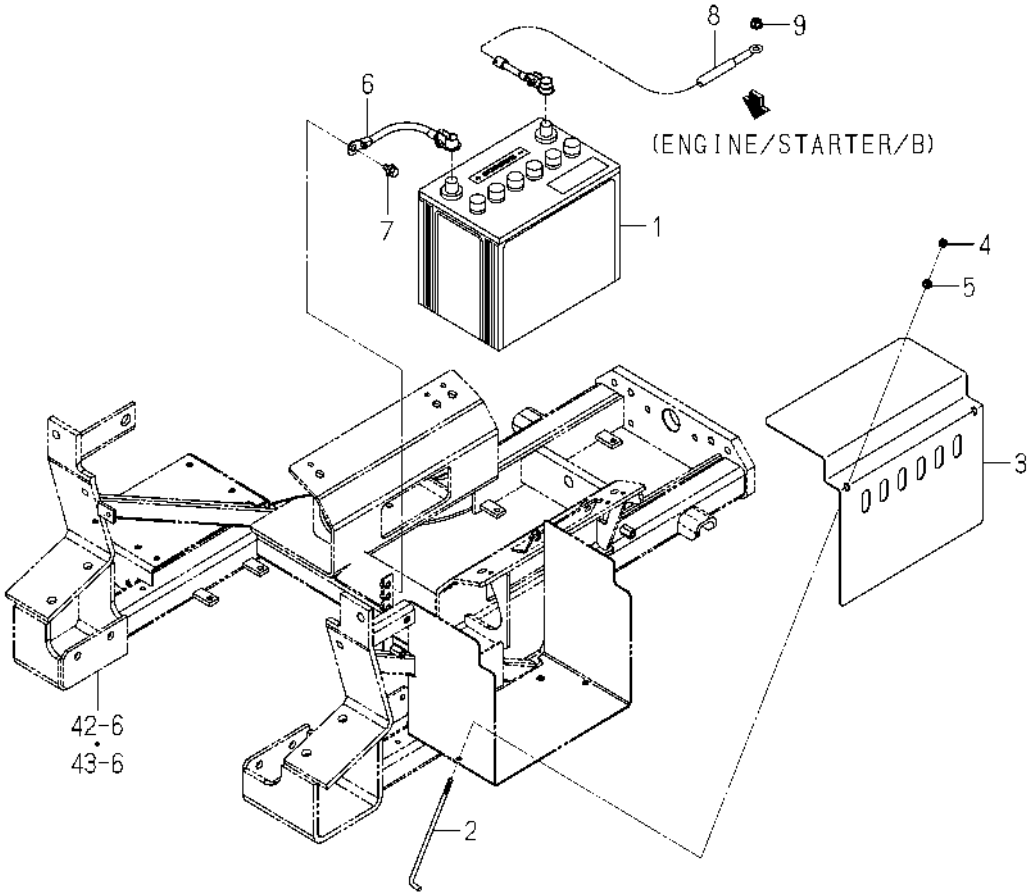

1832-112 -0100

KEY	PART CODE	DESCRIPTION	SPC	TYPE OF MODEL SF224F	TYPE OF MODEL SF235F	ITC	COL	GRP	REMARKS
1	1659-650-200-20	BATTERY/80D26R ASSY	*		1				
2	1675-112-002-00	BOLT/BATTERY	*		2				
3	1832-112-001-10	COVER/BATTERY	*		1				
4	V301-260-006-00	NUT/M6	*		2				
5	V360-260-006-00	NUT/WASHER/M6	*		2				
6	1809-112-210-00	CABLE/EARTH ASSY	*		1				
7	V211-360-801-60	BOLT,SP/M8X16	*		1				
8	1832-112-210-00	CABLE/BATTERY ASSY	*		1				
9	V362-260-008-00	NUT/WASHER/M8	*		1				

FIG. 12 BATTERY SYSTEM(SF224F TYPE)

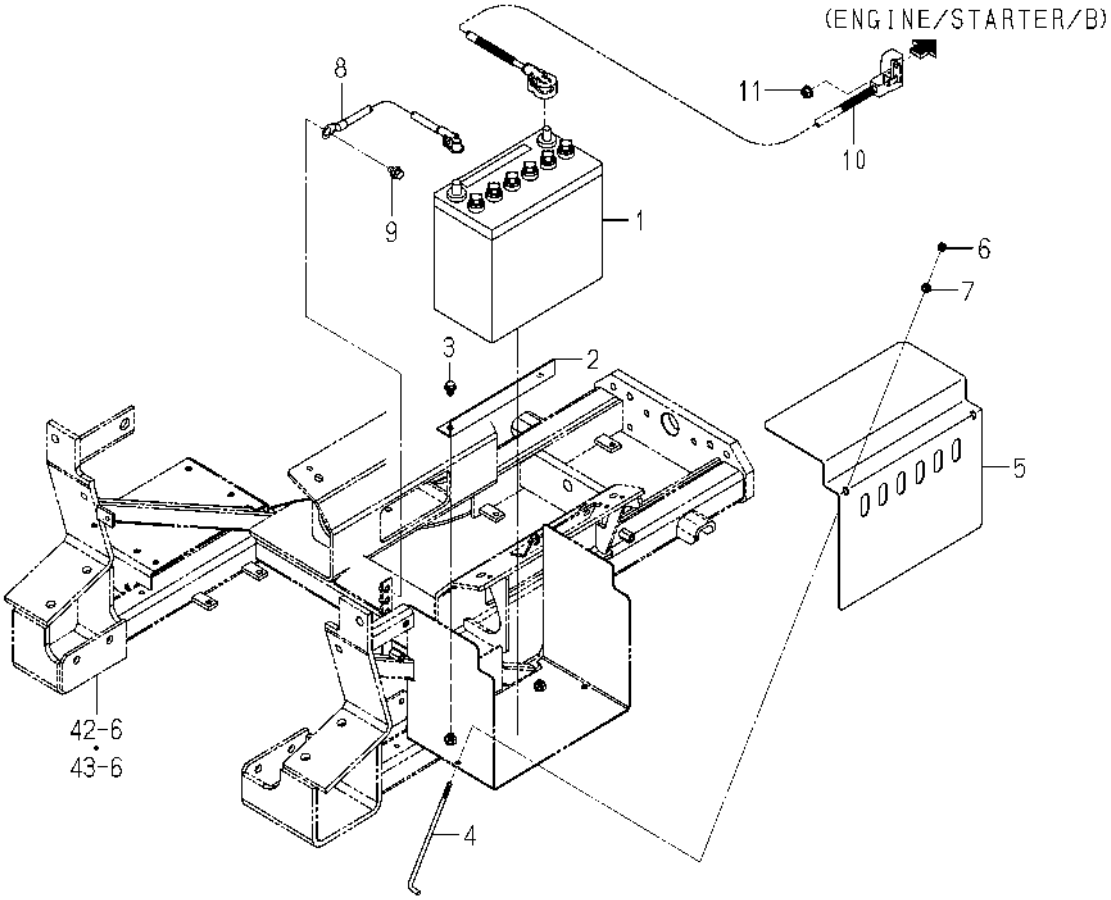

1832-112A-0100

KEY	PART CODE	DESCRIPTION	SPC	TYPE OF MODEL SF224F	TYPE OF MODEL SF235F	ITC	COL	GRP	REMARKS
1	1684-112-230-00	BATTERY/55B24R ASSY	*	1					
2	1832-112-051-00	PLATE/L/220X30	*	1					
3	V231-360-801-20	FLANGEBOLT/M8X12	*	2					
4	1675-112-002-00	BOLT/BATTERY	*	2					
5	1832-112-001-10	COVER/BATTERY	*	1					
6	V301-260-006-00	NUT/M6	*	2					
7	V360-260-006-00	NUT/WASHER/M6	*	2					
8	1832-112-520-00	CABLE/EARTH ASSY	*	1					
9	V211-360-801-60	BOLT,SP/M8X16	*	1					
10	1832-112-510-00	CABLE/BATTERY ASSY	*	1					
11	V362-260-008-00	NUT/WASHER/M8	*	1					

FIG. 13 LEVER(ACCELERATOR)SYSTEM

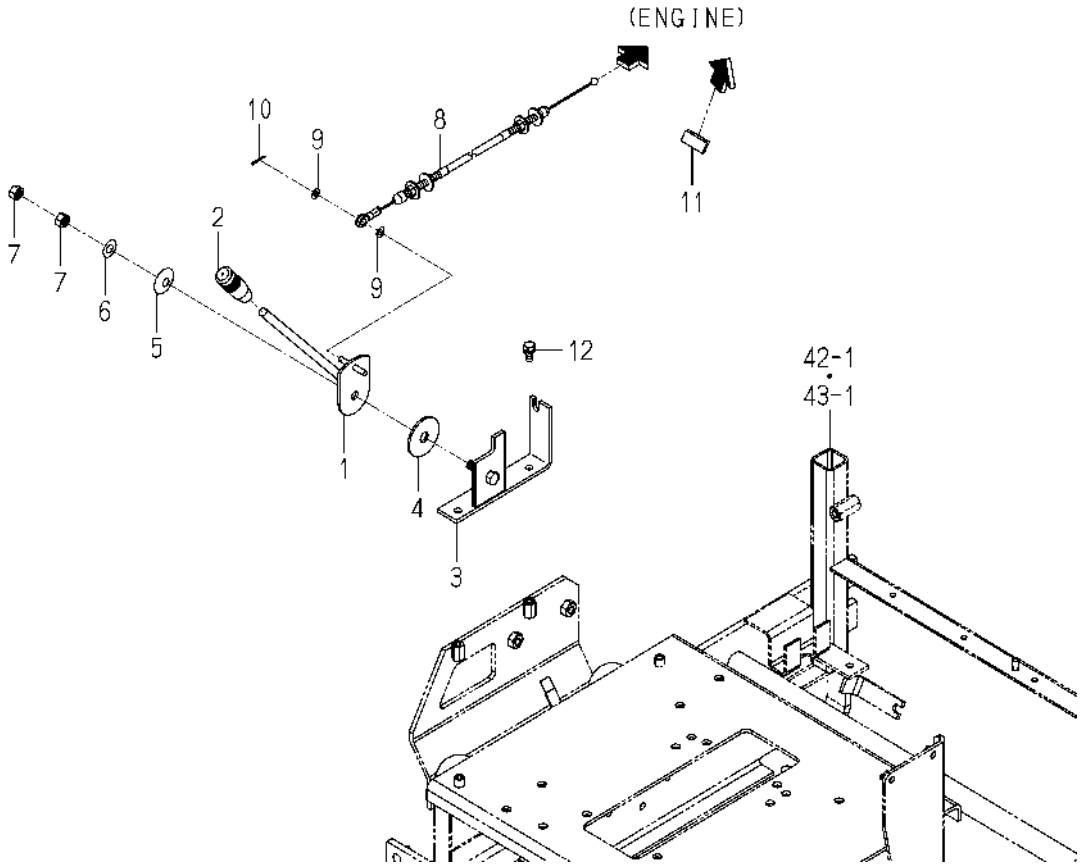

1832-117 -0100

KEY	PART CODE	DESCRIPTION	SPC	TYPE OF MODEL SF224F	TYPE OF MODEL SF235F	ITC	COL	GRP	REMARKS
1	1832-117-210-00	LEVER/ACCELERATOR	*	1	1				
2	1809-117-002-00	GRIP/THROTTLE	*	1	1				
3	1832-117-220-00	BRACKET/LEVER/ACCELE	*	1	1				
4	1600-505-007-10	LINING/13X50X03	*	1	1				
5	1593-117-003-10	SPRING,DISK	*	1	1				
6	V411-260-010-00	WASHER,PL/M10	*	1	1				
7	V304-260-010-00	NUT/M10	*	2	2				
8	1832-117-230-00	CABLE/ACCELERATOR	*	1	1				
9	V411-260-006-00	WASHER,PL/M6	*	2	2				
10	V500-162-501-50	PIN,SPLIT/2.5X15	*	1	1				
11	1675-116-001-00	HOLDER	*	1	1				
12	V211-260-801-60	BOLT,S/M8X16	*	2	2				

FIG. 14 CABLE(ACCELERATOR)SYSTEM

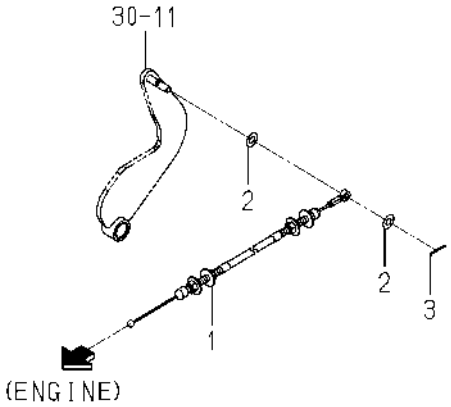

1832-118 -0100

KEY	PART CODE	DESCRIPTION	SPC	TYPE OF MODEL		ITC	COL	GRP	REMARKS
				SF224F	SF235F				
1	1832-118-210-10	CABLE/ACCELERATOR/AU	*	1	1				
2	V411-260-008-00	WASHER,PL/M8	*	2	2				
3	V500-162-502-00	PIN,SPLIT/2.5X20	*	1	1				

FIG. 15 SHAFT(INPUT)SET SYSTEM

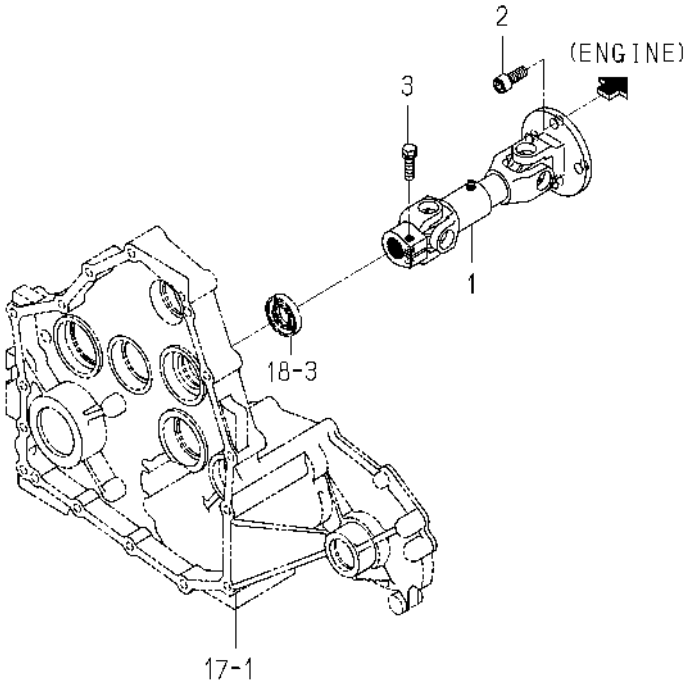

1832-120 -0100

KEY	PART CODE	DESCRIPTION	SPC	TYPE OF MODEL		ITC	COL	GRP	REMARKS
				SF224F	SF235F				
1	1832-120-210-00	SHAFT/INPUT SET	*	1	1				
2	2514-201-011-00	SCREW/SOCKET	*	4	4				
3	2213-312-013-00	BOLT/SEAL/M8X30X9T	*	1	1				

FIG. 16 CASE(TRANSMISSION)SYSTEM

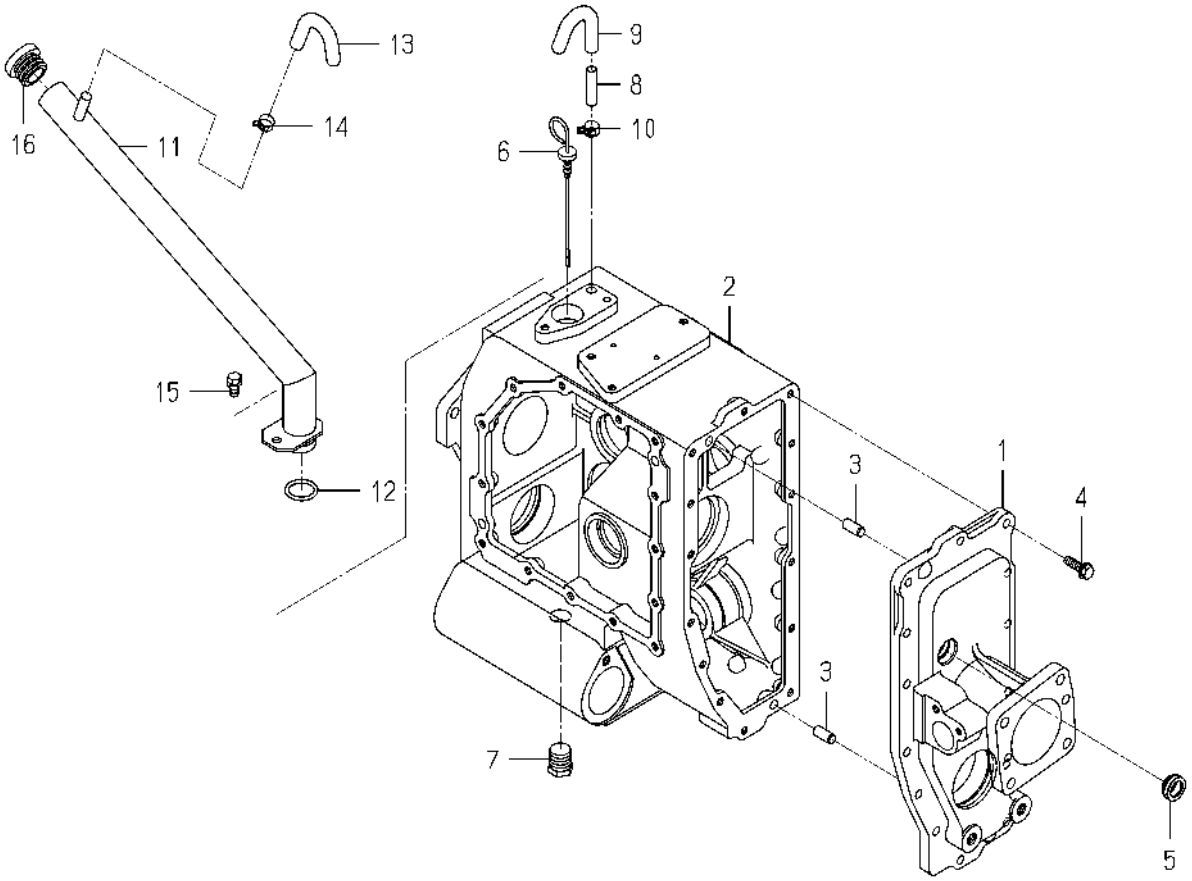

1832-201 -0100

KEY	PART CODE	DESCRIPTION	SPC	TYPE OF MODEL SF224F	TYPE OF MODEL SF235F	ITC	COL	GRP	REMARKS
1	1832-201-001-00	CASE/TRANSMISSION/LH	*	1	1				
2	1832-201-002-00	CASE/TRANSMISSION/RH	*	1	1				
3	V523-101-002-20	PIN,ST,B/10X22	*	2	2				
4	V231-360-802-50	FLANGEBOLT/M8X25	*	14	14				
5	1690-241-003-00	GAUGE/LEBEL	*	1	1				
6	1560-240-007-40	GAUGE,OIL LEVEL	*	1	1				
7	V782-160-000-8B	PLUG/SCREW/SEAL	*	1	1				
8	1544-120-008-10	PIPE,BREATHER	*	1	1				
9	1716-501-006-10	HOSE/BREATHER	*	2	2				
10	J062-138-148-00	CLIP/HOSE/13.8-14.8	*	2	2				
11	1832-201-210-00	PIPE/FILLER/OIL	*	1	1				
12	V720-103-502-60	O-RING/1A,P26	*	1	1				
13	1716-501-006-10	HOSE/BREATHER	*	1	1				
14	J062-138-148-00	CLIP/HOSE/13.8-14.8	*	1	1				
15	V211-260-801-60	BOLT,S/M8X16	*	2	2				
16	3676-356-001-00	CAP/OIL(30)	*	1	1				

FIG. 17 METAL(HST)SYSTEM

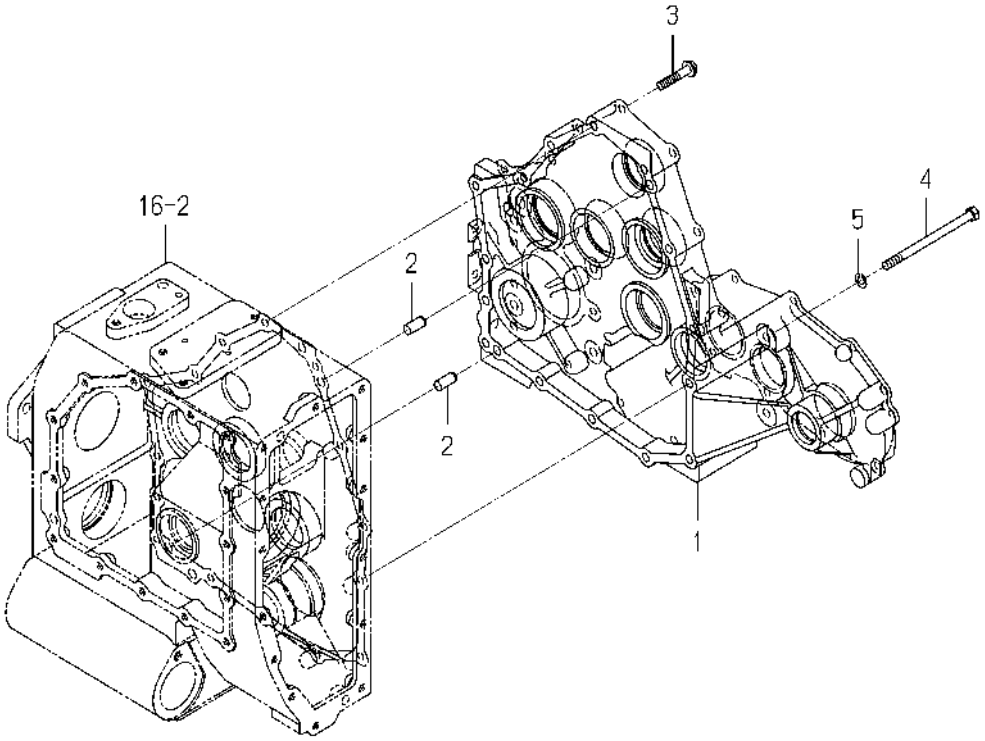

1832-203 -0100

KEY	PART CODE	DESCRIPTION	SPC	TYPE OF MODEL		ITC	COL	GRP	REMARKS
				SF224F	SF235F				
1	1832-203-001-00	METAL/HST	*	1	1				
2	V523-101-002-20	PIN,ST,B/10X22	*	2	2				
3	V231-360-804-00	FLANGEBOLT/M8X40	*	13	13				
4	V401-160-008-00	WASHER,SP/M8	*	2	2				
5	V201-360-812-00	BOLT/M8X120/7T	*	2	2				

FIG. 18 GEAR(INPUT)SYSTEM

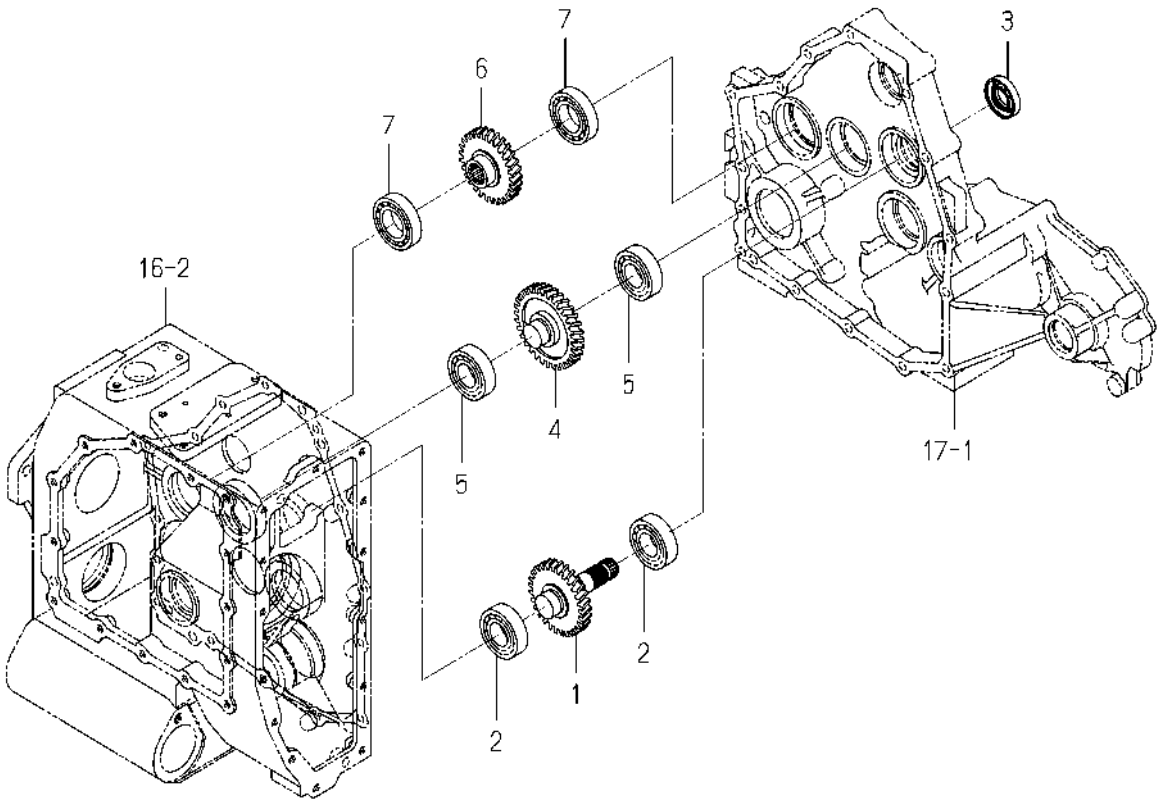

1832-204 -0100

KEY	PART CODE	DESCRIPTION	SPC	TYPE OF MODEL		ITC	COL	GRP	REMARKS
				SF224F	SF235F				
1	1832-204-001-00	GEAR/HELICAL/28	*	1	1				
2	8680-201-009-00	BEARING/BALL/HPS	*	2	2				
3	V744-120-420-80	SEAL,OIL/TC20428	*	1	1				
4	1832-204-002-00	GEAR/HELICAL/31	*	1	1				
5	8680-201-009-00	BEARING/BALL/HPS	*	2	2				
6	1832-204-003-00	GEAR/HELICAL/28	*	1	1				
7	1729-202-003-00	BEARING/BALL	*	2	2				

FIG. 19 HST SYSTEM

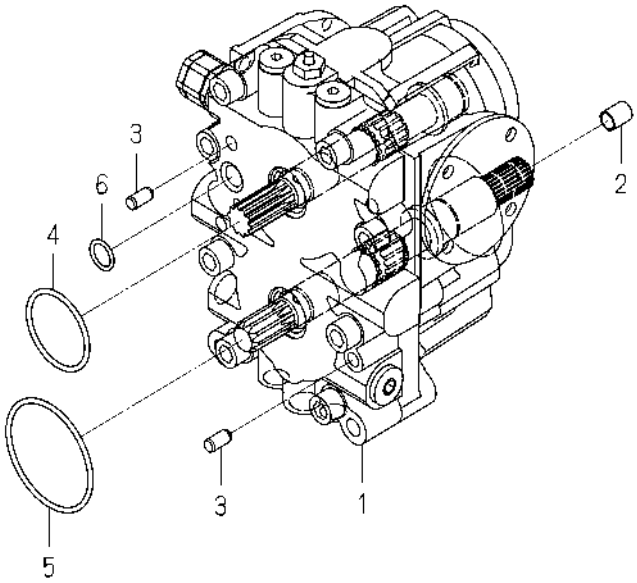

1832-212 -0100

KEY	PART CODE	DESCRIPTION	SPC	TYPE OF MODEL		ITC	COL	GRP	REMARKS
				SF224F	SF235F				
1	K500-008-000-00	HST/SFH/23 ASSY	*	1	1				FIG 082
2	1614-223-221-00	BUSH/10X12X15	*	1	1				
3	V523-100-801-60	PIN,ST,B/8X16	*	2	2				
4	V721-103-105-00	O-RING/1A,G50	*	1	1				
5	V721-103-107-00	O-RING/1A,G70	*	1	1				
6	V720-112-401-50	O-RING/1B,P15	*	1	1				

FIG. 20 GEAR(INPUT)SYSTEM

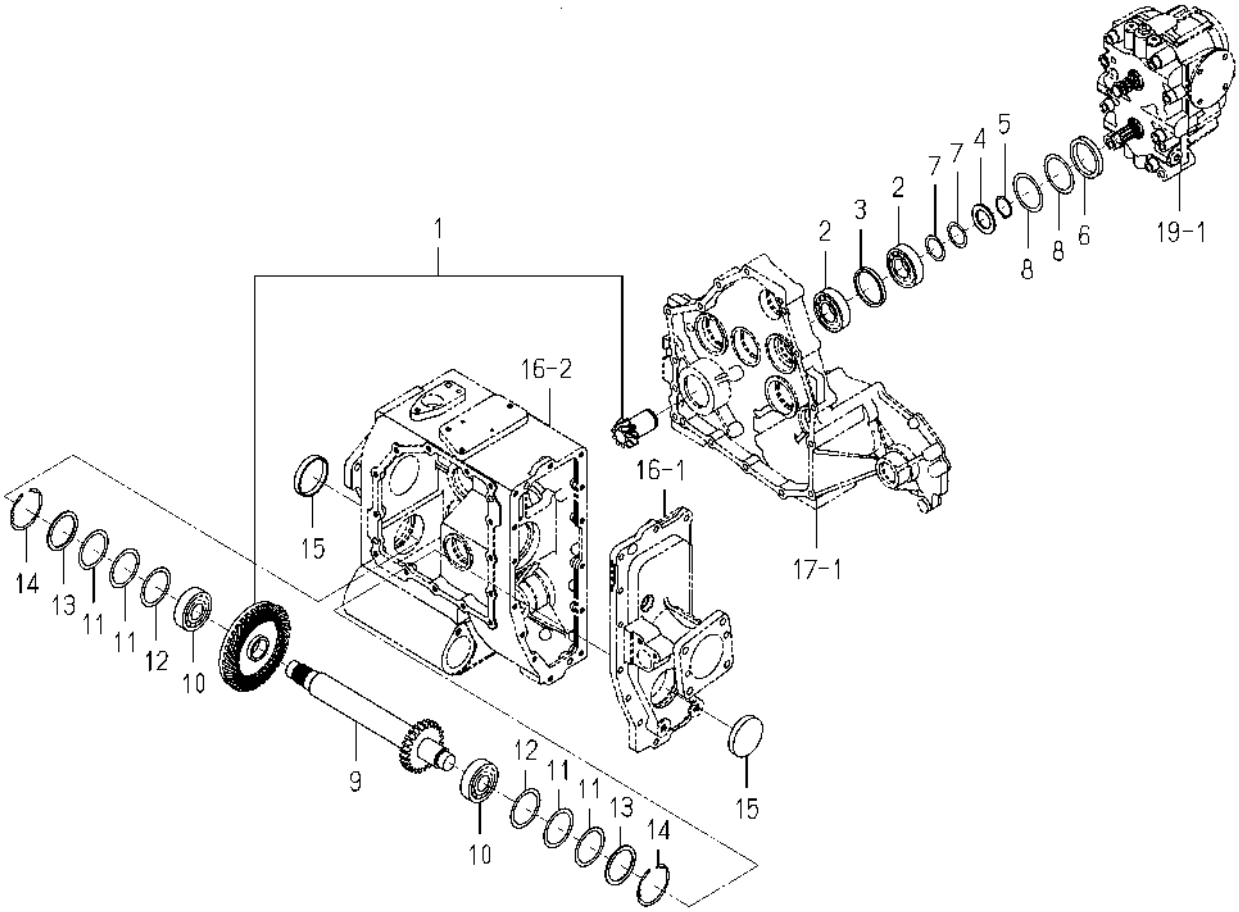

1832-213 -0100

KEY	PART CODE	DESCRIPTION	SPC	TYPE OF MODEL SF224F	TYPE OF MODEL SF235F	ITC	COL	GRP	REMARKS
1	1832-213-900-00	GEAR/INPUT SET	*	1	1				
2	1614-203-015-00	BEARING/BALL	*	2	2				
3	1832-213-002-00	COLLAR/53X61X06	*	1	1				
4	1564-216-004-10	WASHER/30X46X03	*	1	1				
5	V704-140-030-00	RING,SNAP/30 C	*	1	1				
6	1832-213-001-00	COLLAR/50X62X08	*	1	1				
7	3817-116-005-00	SHIM	*	2	2				
8	8663-201-005-00	SHIM/0.2	*	2	2				
9	1832-213-210-00	GEAR/SPUR/24 COMP	*	1	1				
10	V600-110-630-50	BEARING,RB/6305	*	2	2				
11	8663-201-004-00	SHIM/0.1	*	4	4				
12	8663-201-005-00	SHIM/0.2	*	2	2				
13	1724-304-005-00	WASHER/50X62X02	*	2	2				
14	V707-140-062-00	RING,SNAP/R62	*	2	2				
15	1444-314-008-00	SEAL(62)	*	2	2				

FIG. 21 CASE(DIFFERENTIAL)SYSTEM

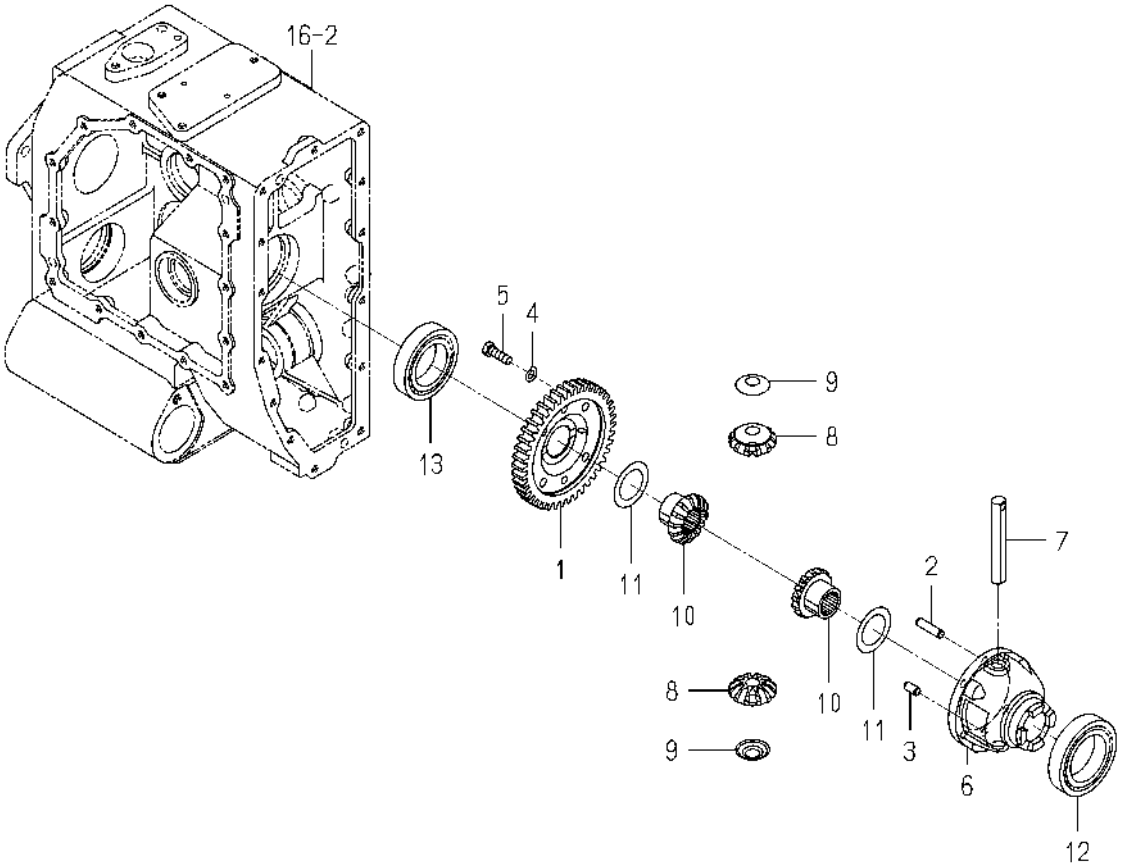

1832-214 -0100

KEY	PART CODE	DESCRIPTION	SPC	TYPE OF MODEL SF224F	TYPE OF MODEL SF235F	ITC	COL	GRP	REMARKS
1	1832-214-001-00	GEAR/SPUR/42	*	1	1				
2	1672-301-002-00	PIN/PARALLEL/08X32	*	1	1				
3	V523-100-801-60	PIN,ST,B/8X16	*	1	1				
4	V401-160-008-00	WASHER,SP/M8	*	4	4				
5	1544-304-006-10	BOLT/M8X25	*	4	4				
6	1427-301-002-20	CASE,DIFF	*	1	1				
7	1444-411-006-00	SHAFT,DIFF. PINION	*	1	1				
8	1672-301-003-00	PINION/BEVEL/12	*	2	2				
9	1427-301-005-00	COLLAR,PINION THRUST	*	2	2				
10	1672-301-004-00	GEAR/BEVEL/14	*	2	2				
11	1427-301-007-00	COLLAR,THRUST	*	2	2				
12	1805-202-025-00	BEARING/BALL/6010C	*	1	1				
13	1832-214-002-00	BEARING/BALL/HPS	*	1	1				

FIG. 22 DIFF-LOCK SYSTEM

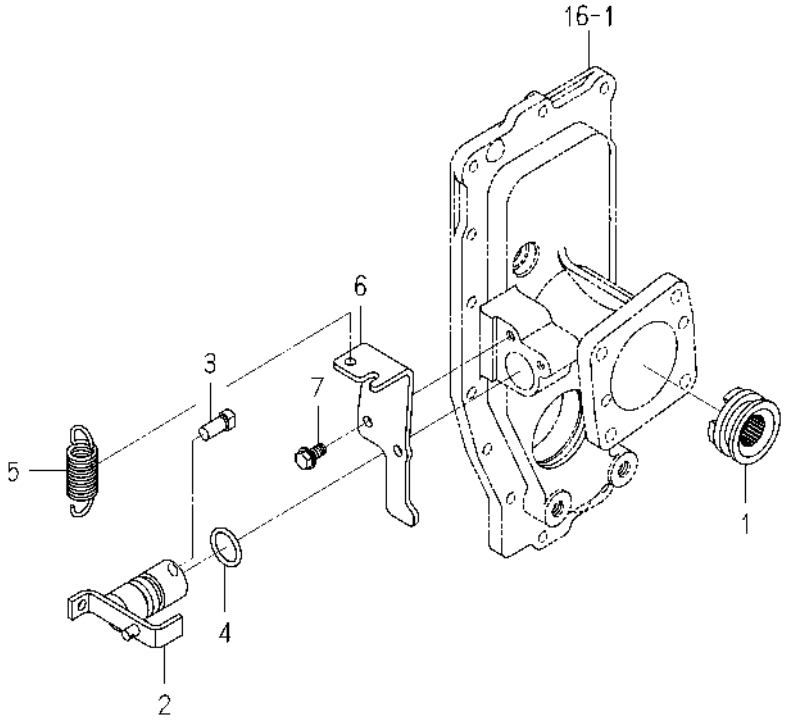

1832-215 -0100

KEY	PART CODE	DESCRIPTION	SPC	TYPE OF MODEL		ITC	COL	GRP	REMARKS
				SF224F	SF235F				
1	1728-204-002-00	CLUTCH/DIFFLOCK	*	1	1				
2	1771-215-210-00	ARM/DIFF COMP	*	1	1				
3	1689-205-005-10	PIN/10X21	*	1	1				
4	V720-103-502-40	O-RING/1A,P24	*	1	1				
5	1728-204-073-30	SPRING/HE073	*	1	1				
6	1771-215-001-00	STAY/DEFFCABLE	*	1	1				
7	V231-360-801-60	FLANGEBOLT/M8X16	*	2	2				

FIG. 23 PEDAL(DIFF-LOCK)SYSTEM

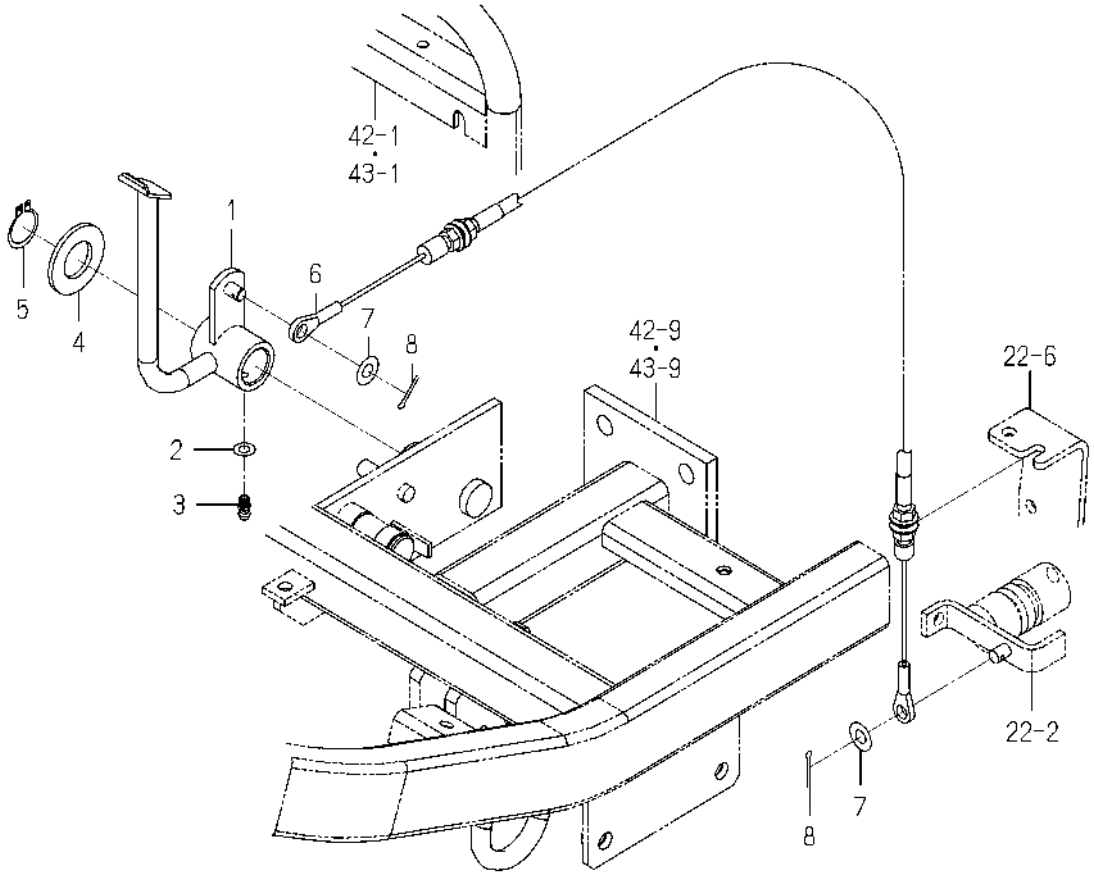

1832-216 -0100

KEY	PART CODE	DESCRIPTION	SPC	TYPE OF MODEL SF224F	TYPE OF MODEL SF235F	ITC	COL	GRP	REMARKS
1	1832-216-210-10	PEDAL/DIFF COMP	*	1	1				
2	V411-260-006-00	WASHER,PL/M6	*	1	1				
3	V760-150-000-00	NIPPLE,GREASE	*	1	1				
4	V411-260-022-00	WASHER,PL/M22	*	1	1				
5	V704-140-022-00	RING,SNAP/22 C	*	1	1				
6	1832-216-220-00	CABLE/DIFF ASSY	*	1	1				
7	V411-260-008-00	WASHER,PL/M8	*	2	2				
8	V500-162-502-00	PIN,SPLIT/2.5X20	*	2	2				

FIG. 24 METAL(PTO/BLOWER)SYSTEM(B TYPE)

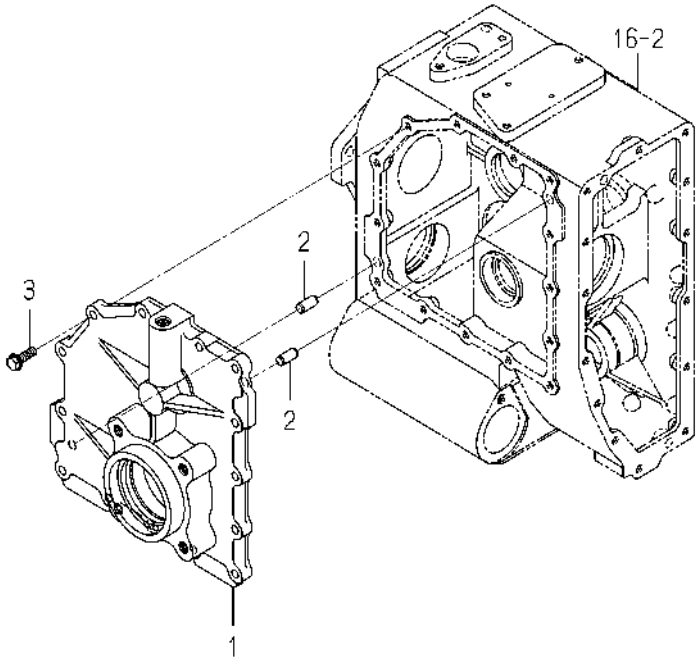

1832-241 -0100

KEY	PART CODE	DESCRIPTION	SPC	TYPE OF MODEL		ITC	COL	GRP	REMARKS
				SF224F	SF235F				
1	1832-241-001-00	METAL/PTO/BLOWER	*	1	1				
2	V523-101-002-20	PIN,ST,B/10X22	*	2	2				
3	V231-360-802-50	FLANGEBOLT/M8X25	*	14	14				

FIG. 25 METAL(PTO/BLOWER)SYSTEM (EXCEPT B TYPE)

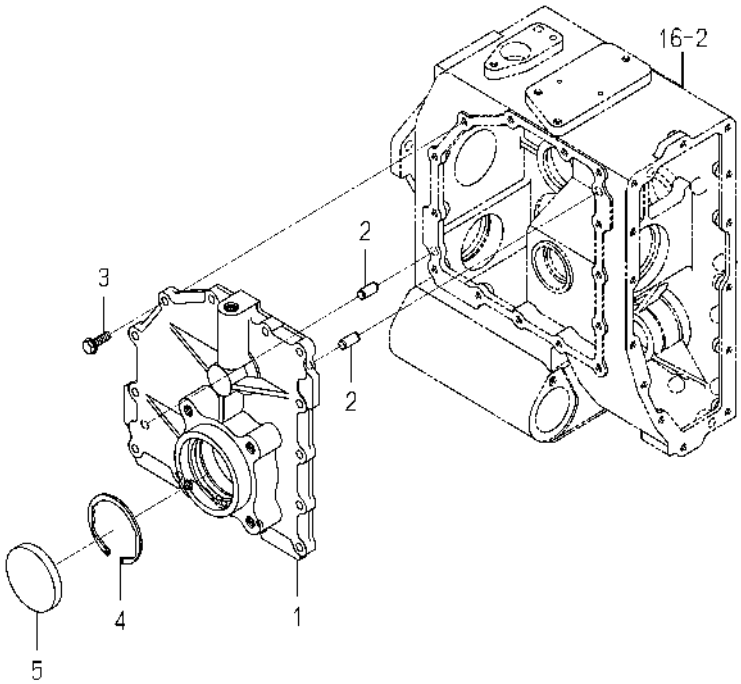

1832-241B-0100

KEY	PART CODE	DESCRIPTION	SPC	TYPE OF MODEL		ITC	COL	GRP	REMARKS
				SF224F	SF235F				
1	1832-241-001-00	METAL/PTO/BLOWER	*	1	1				
2	V523-101-002-20	PIN,ST,B/10X22	*	2	2				
3	V231-360-802-50	FLANGEBOLT/M8X25	*	14	14				
4	V707-140-072-00	RING,SNAP/R72	*	1	1				
5	1425-433-018-00	CAP,BLANK/72	*	1	1				

FIG. 26 DRIVE(PTO/SIDE)SYSTEM

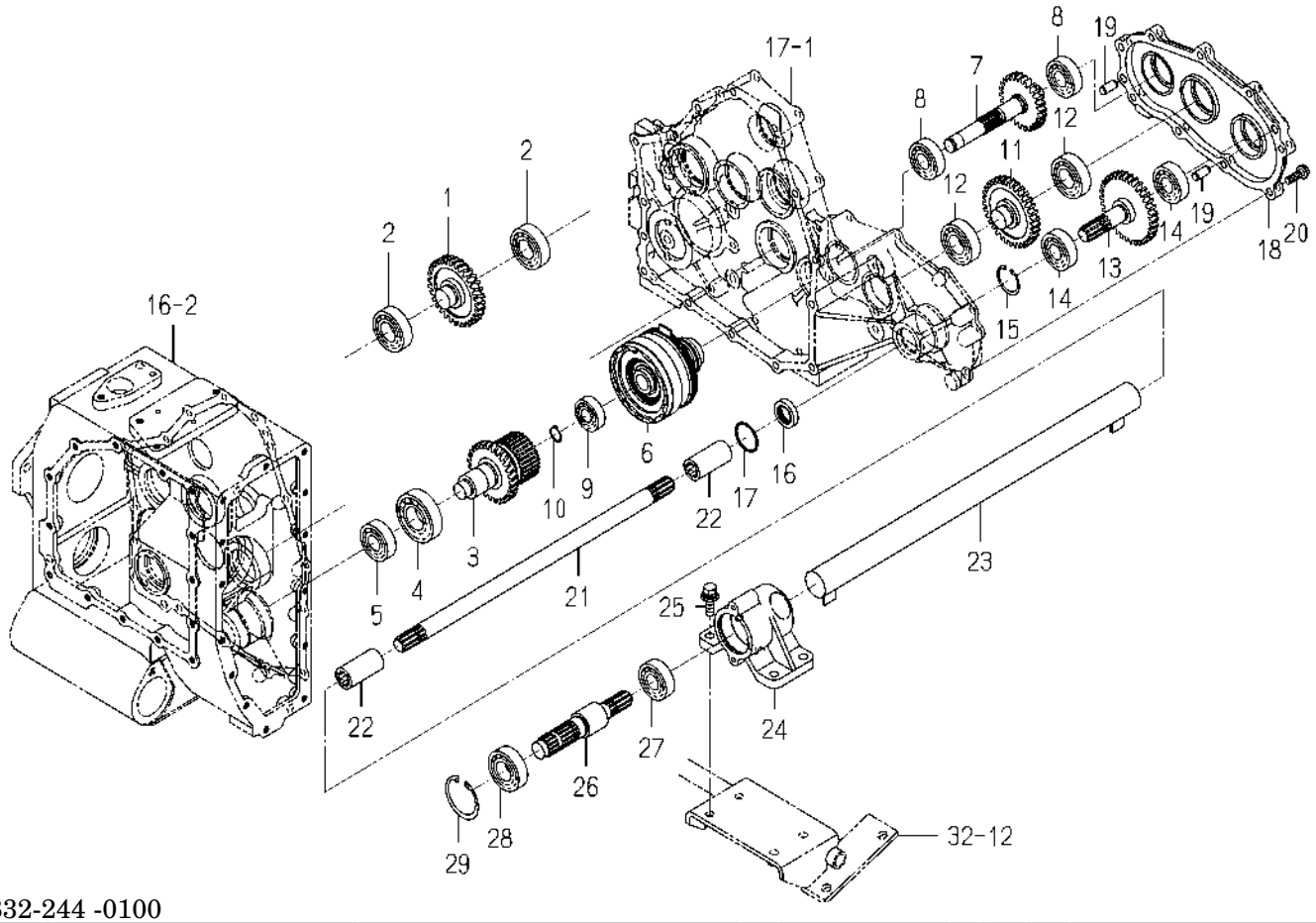

1832-244 -0100

KEY	PART CODE	DESCRIPTION	SPC	TYPE OF MODEL SF224F	TYPE OF MODEL SF235F	ITC	COL	GRP	REMARKS
1	1832-204-002-00	GEAR/HELICAL/31	*	1	1				
2	8680-201-009-00	BEARING/BALL/HPS	*	2	2				
3	1832-244-001-00	GEAR/HELICAL/28	*	1	1				
4	V600-110-620-60	BEARING,RB/6206	*	1	1				
5	V600-110-620-40	BEARING,RB/6204	*	1	1				
6	1825-127-300-00	CLUTCH/PTO ASSY	*	1	1				FIG 087
7	1832-244-200-00	GEAR/SPUR/26 COMP	*	1	1				
8	V600-110-620-40	BEARING,RB/6204	*	2	2				
9	V600-110-620-30	BEARING,RB/6203	*	1	1				
10	V704-140-017-00	RING,SNAP/17 C	*	1	1				
11	1832-244-002-00	GEAR/SPUR/33	*	1	1				
12	8680-201-009-00	BEARING/BALL/HPS	*	2	2				
13	1832-244-005-00	GEAR/SPUR/34	*	1	1				
14	V600-110-620-40	BEARING,RB/6204	*	2	2				
15	V705-140-034-00	RING,SNAP/34 C	*	1	1				
16	1614-222-007-00	SEAL/OIL	*	1	1				
17	V723-102-003-40	O-RING/1A,S34	*	1	1				
18	1832-244-004-00	METAL/PTO/MOWER	*	1	1				
19	V523-101-002-20	PIN,ST,B/10X22	*	2	2				
20	V231-360-802-50	FLANGEBOLT/M8X25	*	9	9				
21	1832-244-003-00	SHAFT/465	*	1	1				
22	1673-431-001-10	COUPRING/16X27X55	*	2	2				
23	1832-244-230-00	TUBE/540 COMP	*	1	1				
24	1771-244-011-10	METAL/PTO/B	*	1	1				
25	V211-661-003-00	BOLT,SP/M10X30/7T	*	4	4				
26	1832-244-006-00	SHAFT/PTO	*	1	1				
27	1729-202-014-00	BEARING/BALL	*	1	1				
28	1832-244-007-00	BEARING/BALL/HPS	*	1	1				
29	V705-140-052-00	RING,SNAP/52 C	*	1	1				

FIG. 27 DRIVE(PTO/BLOWER)SYSTEM (B TYPE SF235F)

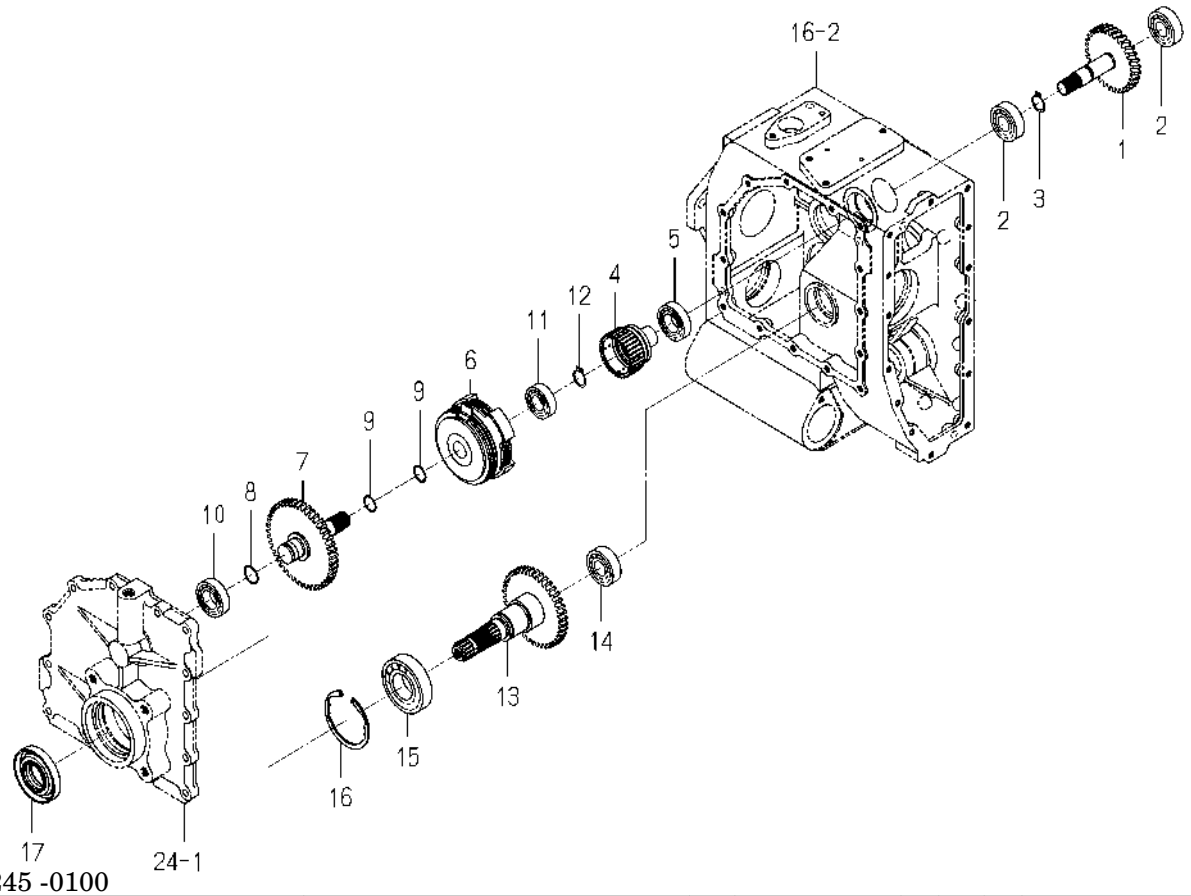

1832-245 -0100

KEY	PART CODE	DESCRIPTION	SPC	TYPE OF MODEL SF224F	TYPE OF MODEL SF235F	ITC	COL	GRP	REMARKS
1	1832-245-200-00	GEAR/HELICAL/31 COMP	*		1				
2	V600-110-620-40	BEARING,RB/6204	*		2				
3	V704-140-020-00	RING,SNAP/20 C	*		1				
4	1832-245-001-00	COUPLING/PTO	*		1				
5	1729-202-002-00	BEARING/BALL	*		1				
6	1725-219-720-20	CLUTCH/PTO ASSY	*		1				FIG 085
7	1832-245-210-00	GEAR/SPUR/45 COMP	*		1				
8	1575-261-018-00	RING/25	*		1				
9	1688-211-057-00	RING/22	*		2				
10	1729-202-002-00	BEARING/BALL	*		1				
11	V600-111-600-40	BEARING,RB/16004	*		1				
12	V704-140-020-00	RING,SNAP/20 C	*		1				
13	1832-245-220-00	GEAR/SPUR/40 COMP	*		1				
14	V600-110-620-40	BEARING,RB/6204	*		1				
15	1729-202-007-00	BEARING/BALL	*		1				
16	V707-140-072-00	RING,SNAP/R72	*		1				
17	1632-273-200-00	SEAL,OIL	*		1				

FIG. 28 DRIVE(PTO/BLOWER)SYSTEM (B TYPE SF224F)

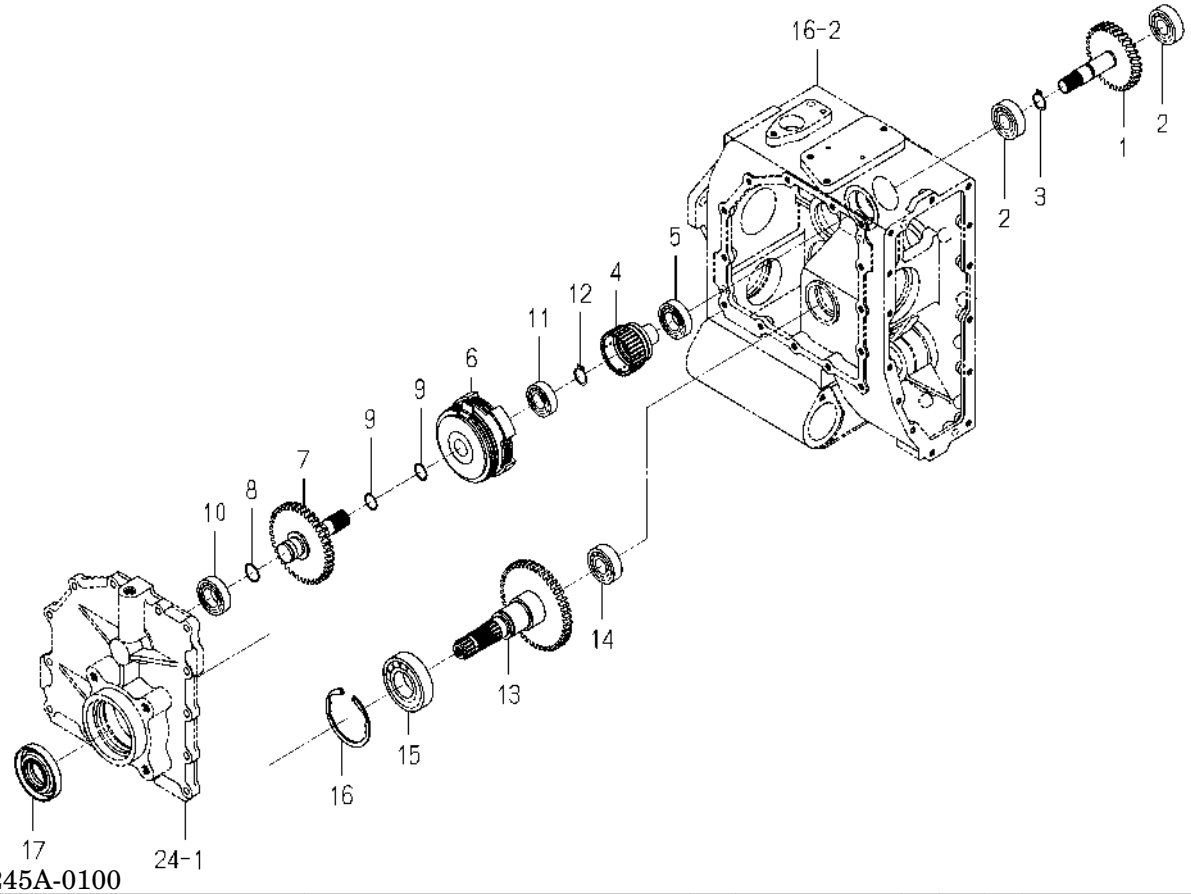

1832-245A-0100

KEY	PART CODE	DESCRIPTION	SPC	TYPE OF MODEL SF224F	TYPE OF MODEL SF235F	ITC	COL	GRP	REMARKS
1	1832-245-200-00	GEAR/HELICAL/31 COMP	*	1					
2	V600-110-620-40	BEARING,RB/6204	*	2					
3	V704-140-020-00	RING,SNAP/20 C	*	1					
4	1832-245-001-00	COUPLING/PTO	*	1					
5	1729-202-002-00	BEARING/BALL	*	1					
6	1725-219-720-20	CLUTCH/PTO ASSY	*	1					FIG 085
7	1832-245-500-00	GEAR/SPUR/40 COMP	*	1					
8	1575-261-018-00	RING/25	*	1					
9	1688-211-057-00	RING/22	*	2					
10	1729-202-002-00	BEARING/BALL	*	1					
11	V600-111-600-40	BEARING,RB/16004	*	1					
12	V704-140-020-00	RING,SNAP/20 C	*	1					
13	1832-245-510-00	GEAR/SPUR/45 COMP	*	1					
14	V600-110-620-40	BEARING,RB/6204	*	1					
15	1729-202-007-00	BEARING/BALL	*	1					
16	V707-140-072-00	RING,SNAP/R72	*	1					
17	1632-273-200-00	SEAL,OIL	*	1					

FIG. 29 COVER(PTO/SIDE)SYSTEM

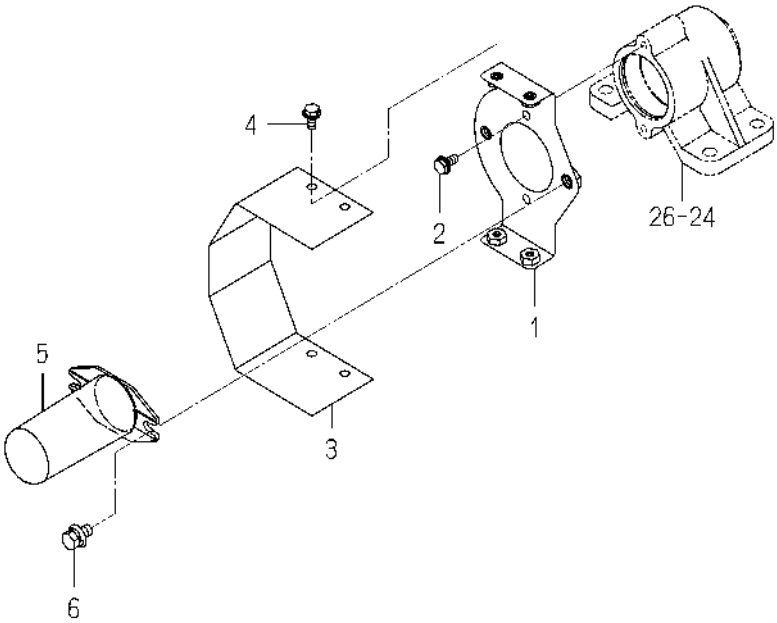

1832-246 -0100

KEY	PART CODE	DESCRIPTION	SPC	TYPE OF MODEL SF224F	TYPE OF MODEL SF235F	ITC	COL	GRP	REMARKS
1	1832-246-210-00	STAY/COVER/SIDE/P	*	1	1				
2	V230-360-601-20	FLANGEBOLT/M6X12	*	2	2				
3	1771-246-052-00	COVER/SIDEPTO	*	1	1				
4	V230-360-601-20	FLANGEBOLT/M6X12	*	4	4				
5	1444-314-009-10	CAP,PTO SHAFT	*	1	1				
6	V211-360-801-60	BOLT,SP/M8X16	*	2	2				

FIG. 30 LINK(HST)SYSTEM

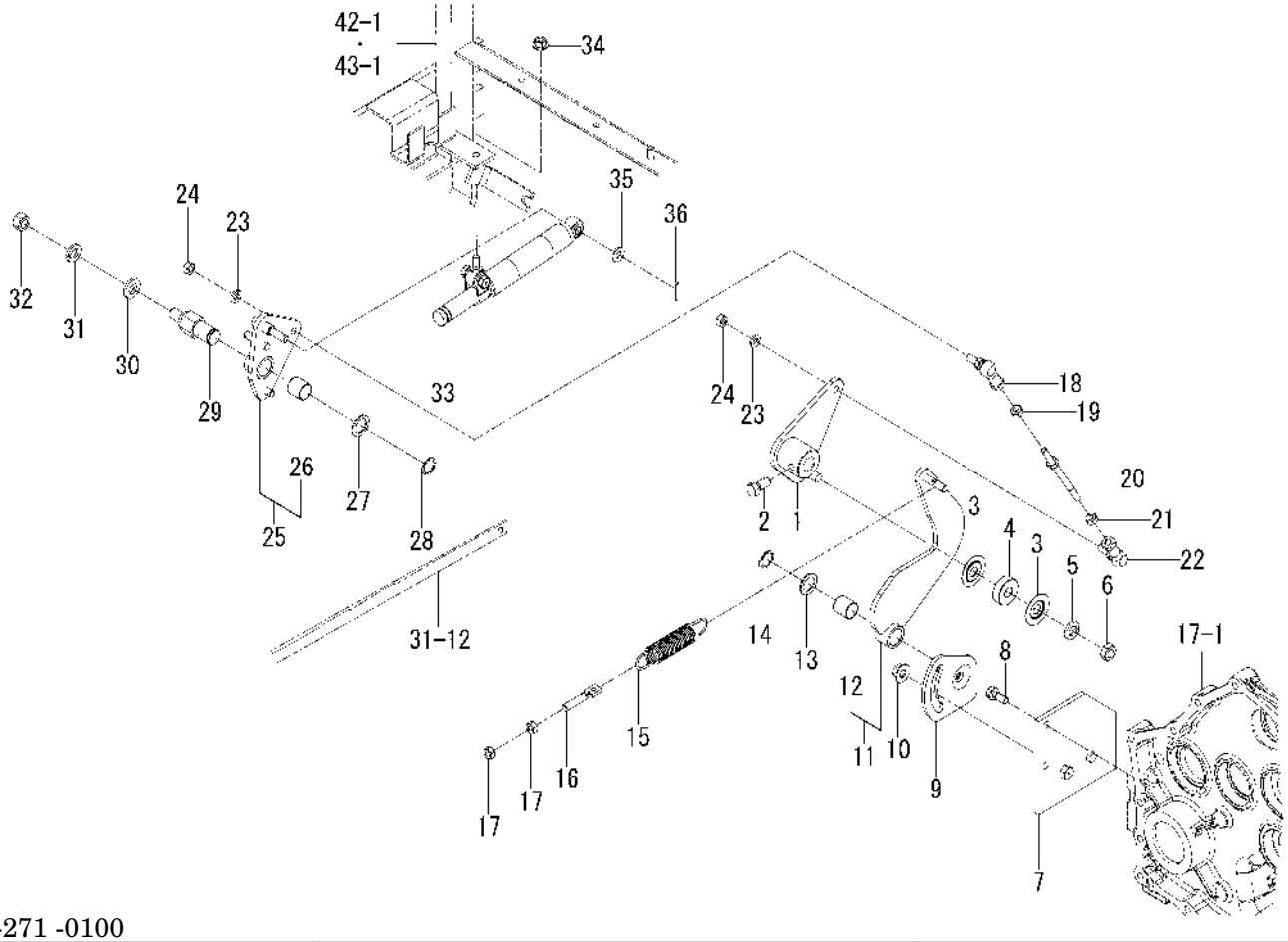

1832-271 -0100

KEY	PART CODE	DESCRIPTION	SPC	TYPE OF MODEL SF224F	TYPE OF MODEL SF235F	ITC	COL	GRP	REMARKS
1	1832-271-210-00	ARM/TRUNNION COMP	*	1	1				
2	1646-226-053-00	BOLT/SM/M10X23	*	1	1				
3	1689-271-006-00	WASHER/38X12X2	*	2	2				
4	V600-150-620-10	BEARING,RB/6201SS	*	1	1				
5	V401-160-012-00	WASHER,SP/M12	*	1	1				
6	V305-260-012-00	NUT/M12	*	1	1				
7	1832-271-240-00	BRACKET/NEUTRAL COMP	*	1	1				
8	V211-560-802-00	BOLT,S/M8X20/7T	*	2	2				
9	1832-271-230-00	PLATE/ADJUST COMP	*	1	1				
10	V363-260-010-00	NUT/WASHER/M10	*	1	1				
11	1832-271-260-00	ARM/NEUTRAL ASSY	*	1	1				
12	2504-135-008-10	BUSH/18X20X20	*	1	1				
13	2144-419-022-00	WASHER/18X26X02	*	1	1				
14	V704-140-018-00	RING,SNAP/18 C	*	1	1				
15	2500-210-016-00	SPRING/HE108	*	1	1				
16	1832-271-002-00	ROD/M08X47	*	1	1				
17	V304-260-008-00	NUT/M8	*	2	2				
18	1560-695-021-00	JOINT BALL M08RH	*	1	1				
19	V304-260-008-00	NUT/M8	*	1	1				
20	1683-271-560-00	ROD/M08X110 COMP	*	1	1				
21	1560-132-007-30	NUT/LH/M08	*	1	1				
22	1560-695-022-00	JOINT BALL M08LH	*	1	1				
23	V401-160-008-00	WASHER,SP/M8	*	2	2				
24	V304-260-008-00	NUT/M8	*	2	2				
25	1832-271-250-00	ARM/HST ASSY	*	1	1				
26	2504-135-008-10	BUSH/18X20X20	*	1	1				
27	2144-419-022-00	WASHER/18X26X02	*	1	1				
28	V704-140-018-00	RING,SNAP/18 C	*	1	1				
29	1832-271-001-00	PIN/COUNTER/HST	*	1	1				
30	3504-418-007-10	WASHER,SUPPORT	*	1	1				

FIG. 30 LINK(HST)SYSTEM

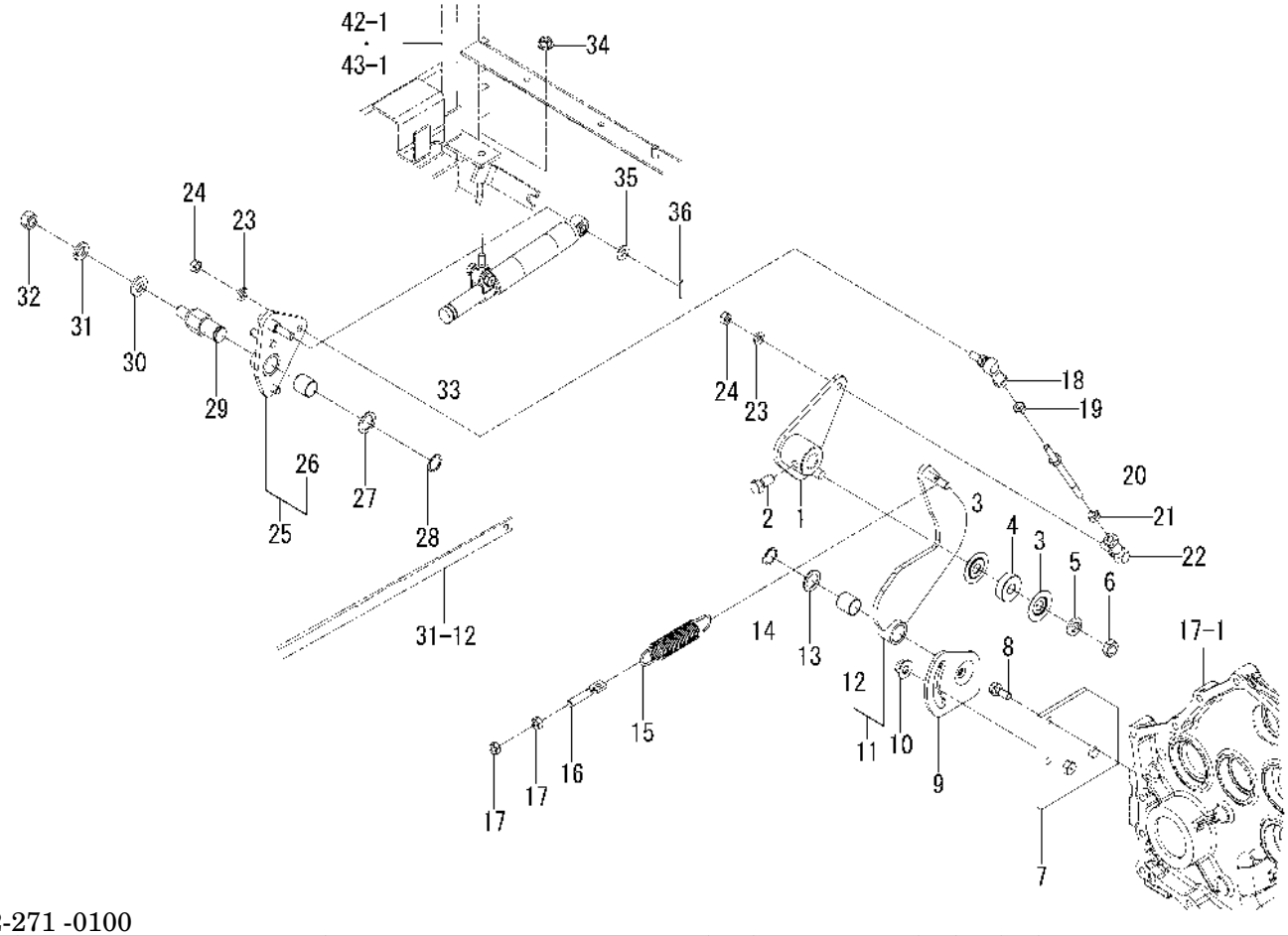

1832-271 -0100

KEY	PART CODE	DESCRIPTION	SPC	TYPE OF MODEL SF224F	TYPE OF MODEL SF235F	ITC	COL	GRP	REMARKS
31	V401-160-012-00	WASHER,SP/M12	*	1	1				
32	V304-460-012-00	NUT/M12/7T	*	1	1				
33	1646-640-580-00	DAMPER/OIL ASSY	*	1	1				
34	V362-260-008-00	NUT/WASHER/M8	*	1	1				
35	V411-260-008-00	WASHER,PL/M8	*	1	1				
36	V500-162-502-00	PIN,SPLIT/2.5X20	*	1	1				

FIG. 31 PEDAL(HST)SYSTEM

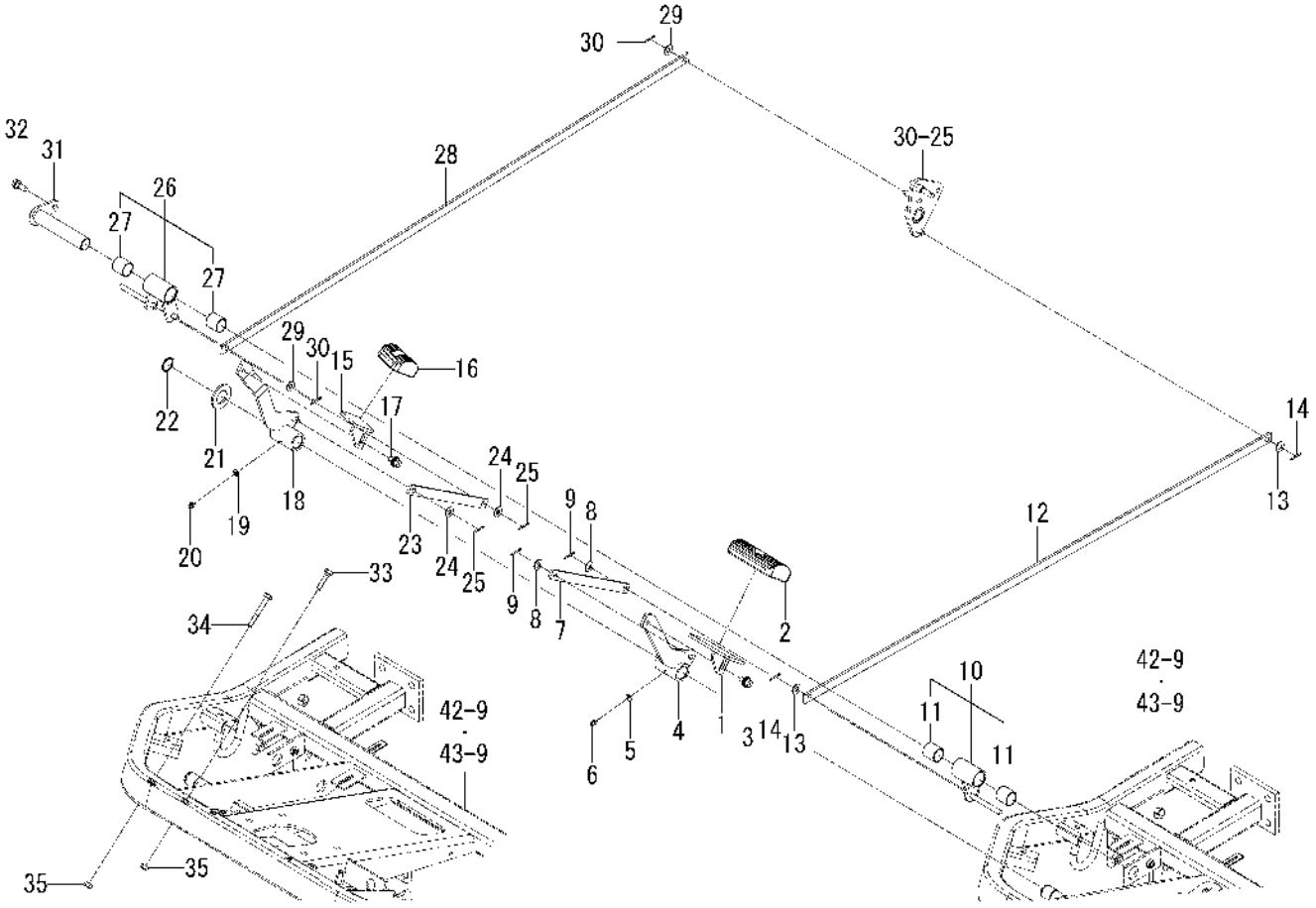

1832-272 -0100

KEY	PART CODE	DESCRIPTION	SPC	TYPE OF MODEL SF224F	TYPE OF MODEL SF235F	ITC	COL	GRP	REMARKS
1	1689-272-260-00	PEDAL/HST/F COMP	*	1	1				
2	1747-640-067-00	PAD/HST	*	1	1				
3	V211-360-801-60	BOLT,SP/M8X16	*	1	1				
4	1832-272-210-00	ARM/HST/F COMP	*	1	1				
5	V411-260-006-00	WASHER,PL/M6	*	1	1				
6	V760-150-000-00	NIPPLE,GREASE	*	1	1				
7	1832-272-001-10	PLATE/I/16X217	*	1	1				
8	V411-260-008-00	WASHER,PL/M8	*	2	2				
9	V500-162-502-00	PIN,SPLIT/2.5X20	*	2	2				
10	1832-272-260-10	ARM/COUNTER/FRONT	*	1	1				
11	1725-433-202-10	BUSH/22X25X25	*	2	2				
12	1832-272-003-00	PLATE/I/16X1105	*	1	1				
13	V411-260-008-00	WASHER,PL/M8	*	2	2				
14	V500-162-502-00	PIN,SPLIT/2.5X20	*	2	2				
15	1689-272-240-00	PEDAL/HST/RH COMP	*	1	1				
16	1774-272-071-00	PAD/HST/R	*	1	1				
17	V211-360-801-60	BOLT,SP/M8X16	*	1	1				
18	1832-272-220-10	ARM/HST/R COMP	*	1	1				
19	V411-260-006-00	WASHER,PL/M6	*	1	1				
20	V760-150-000-00	NIPPLE,GREASE	*	1	1				
21	V411-260-022-00	WASHER,PL/M22	*	1	1				
22	V704-140-022-00	RING,SNAP/22 C	*	1	1				
23	1832-272-001-10	PLATE/I/16X217	*	1	1				
24	V411-260-008-00	WASHER,PL/M8	*	2	2				
25	V500-162-502-00	PIN,SPLIT/2.5X20	*	2	2				
26	1832-272-270-10	ARM/COUNTER/REA ASSY	*	1	1				
27	1725-433-202-10	BUSH/22X25X25	*	2	2				
28	1832-272-003-00	PLATE/I/16X1105	*	1	1				
29	V411-260-008-00	WASHER,PL/M8	*	2	2				
30	V500-162-502-00	PIN,SPLIT/2.5X20	*	2	2				

FIG. 31 PEDAL(HST)SYSTEM

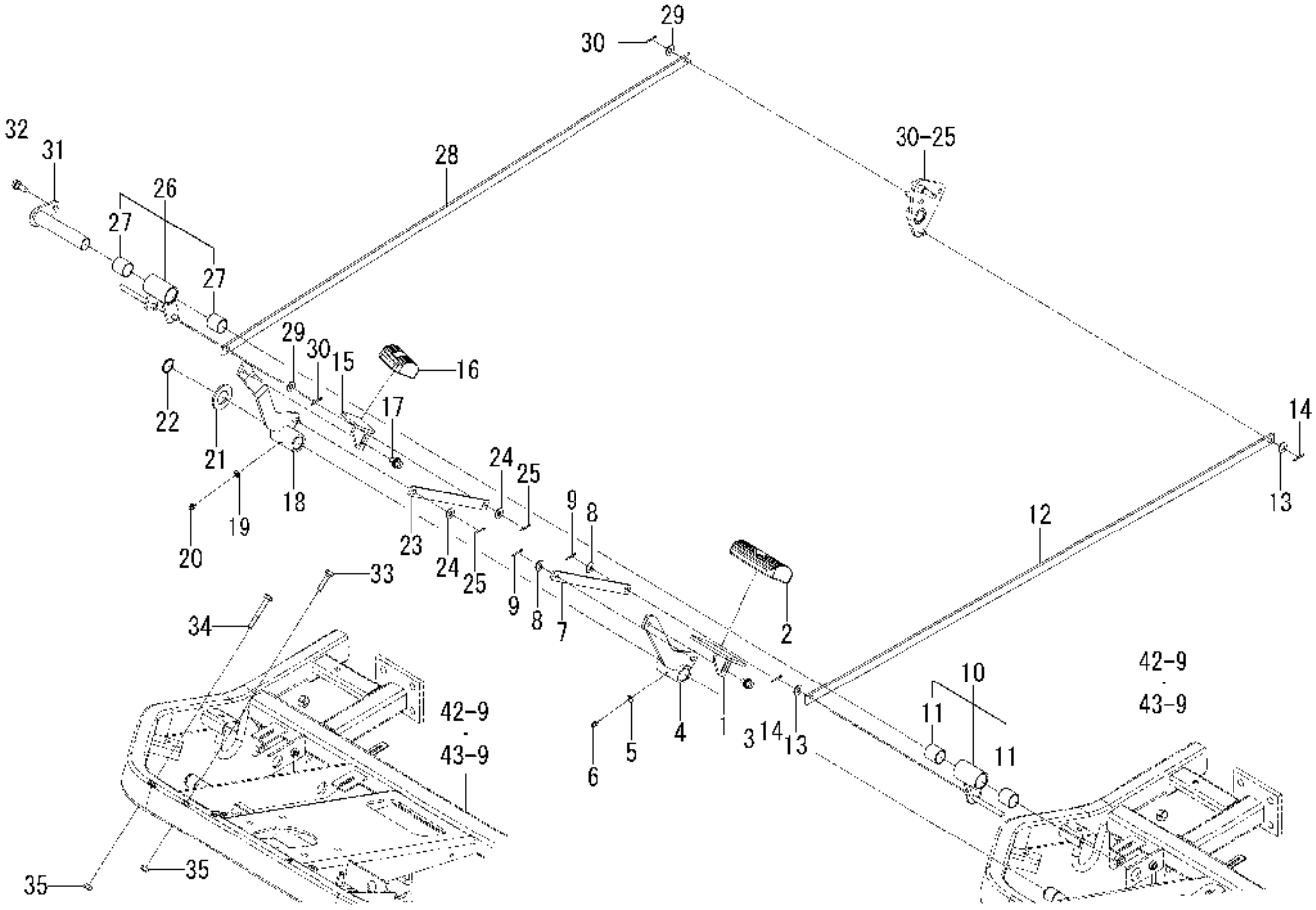

1832-272 -0100

KEY	PART CODE	DESCRIPTION	SPC	TYPE OF MODEL SF224F	TYPE OF MODEL SF235F	ITC	COL	GRP	REMARKS
31	1832-272-250-00	PIN/COUNTER/HST COMP	*	1	1				
32	V211-560-802-00	BOLT,S/M8X20/7T	*	1	1				
33	V201-360-803-00	BOLT/M8X30/7T	*	1	1				
34	V201-360-805-50	BOLT/M8X55/7T	*	1	1				
35	V304-460-008-00	NUT/M8/7T	*	2	2				

FIG. 32 CASE(CHAIN)SYSTEM

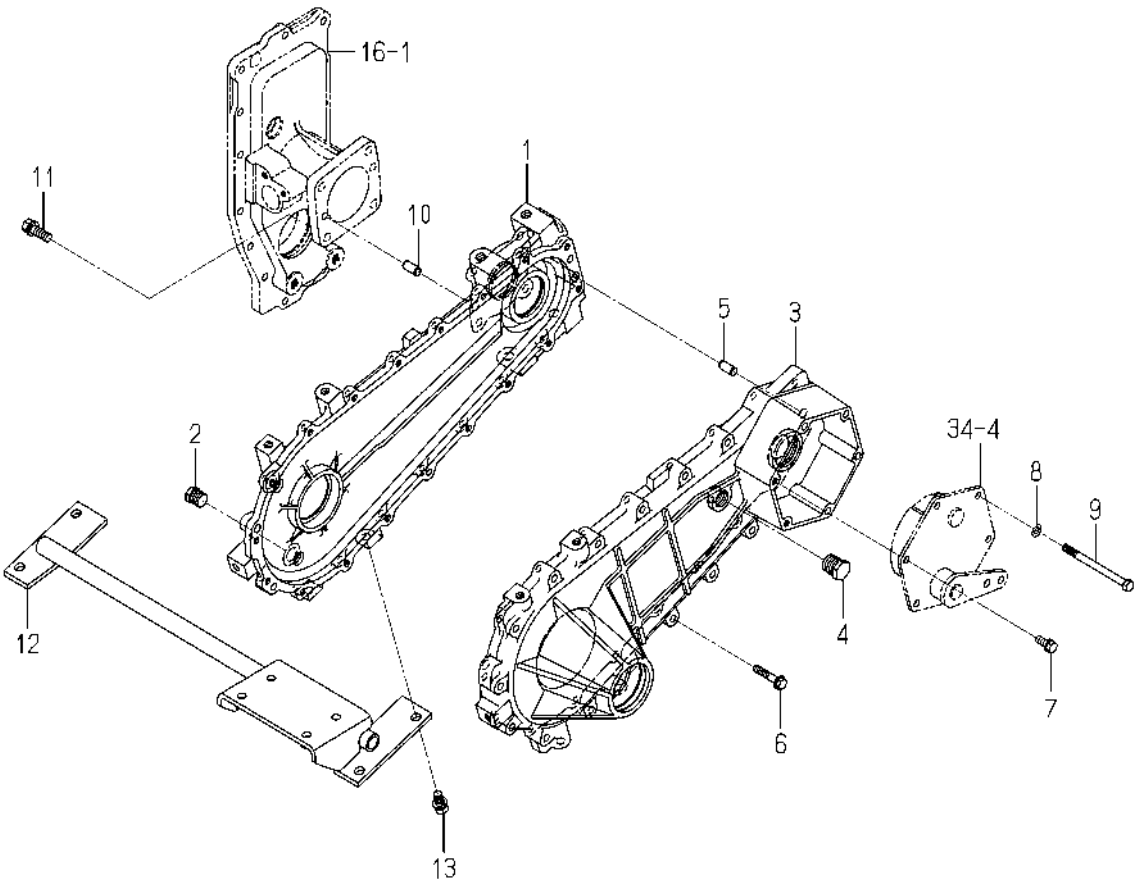

1832-306 -0100

KEY	PART CODE	DESCRIPTION	SPC	TYPE OF MODEL SF224F	TYPE OF MODEL SF235F	ITC	COL	GRP	REMARKS
1	1832-306-001-00	CASE/CHAIN/A	*	2	2				
2	V782-160-000-6B	PLUG/SCREW/SEAL	*	4	4				
3	1832-306-002-00	CASE/CHAIN/B	*	2	2				
4	V782-160-000-8B	PLUG/SCREW/SEAL	*	2	2				
5	V523-101-002-20	PIN,ST,B/10X22	*	4	4				
6	V231-360-804-00	FLANGEBOLT/M8X40	*	28	28				
7	V211-260-802-00	BOLT,S/M8X20	*	4	4				
8	V401-160-008-00	WASHER,SP/M8	*	8	8				
9	V201-260-810-50	BOLT/M8X105	*	8	8				
10	V523-101-002-20	PIN,ST,B/10X22	*	4	4				
11	V211-561-003-00	BOLT,S/M10X30/7T	*	8	8				
12	1832-306-210-00	STAY/CASE COMP	*	1	1				
13	V211-561-002-00	BOLT,S/M10X20/7T	*	4	4				

FIG. 33 SHAFT(WHEEL/FRONT)SYSTEM

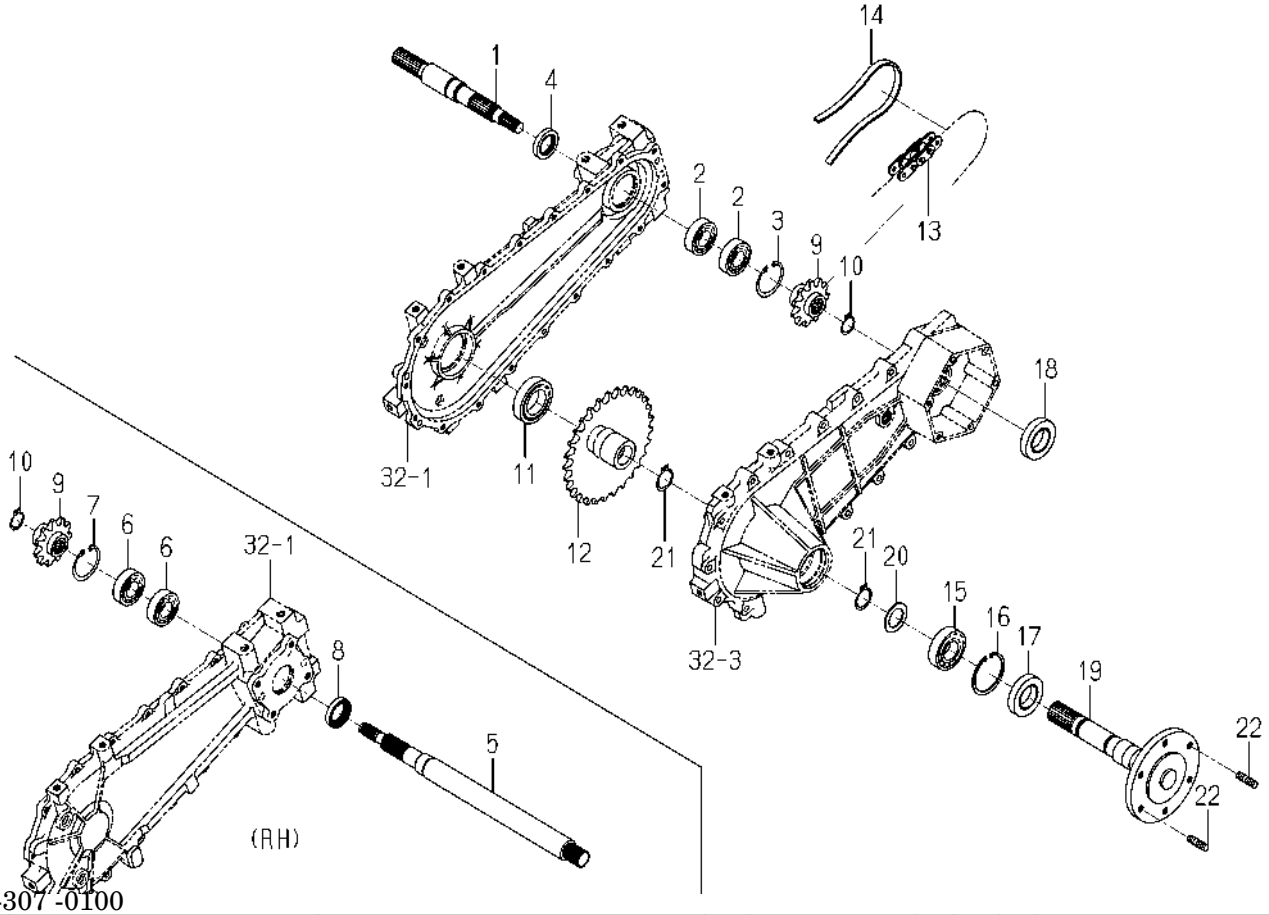

1832-307 -0100

KEY	PART CODE	DESCRIPTION	SPC	TYPE OF MODEL SF224F	TYPE OF MODEL SF235F	ITC	COL	GRP	REMARKS
1	1771-307-051-20	SHAFT/DIFF/LH	*	1	1				
2	8680-201-009-00	BEARING/BALL/HPS	*	2	2				
3	V705-140-052-00	RING,SNAP/52 C	*	1	1				
4	V744-130-450-80	SEAL,OIL/TC30458	*	1	1				
5	1832-307-001-00	SHAFT/DIFF/RH	*	1	1				
6	8680-201-009-00	BEARING/BALL/HPS	*	2	2				
7	V705-140-052-00	RING,SNAP/52 C	*	1	1				
8	V744-130-450-80	SEAL,OIL/TC30458	*	1	1				
9	1728-307-024-00	SPROCKET/11	*	2	2				
10	V704-140-025-00	RING,SNAP/25 C	*	2	2				
11	1729-202-005-00	BEARING/BALL	*	2	2				
12	1728-307-025-00	SPROCKET/29	*	2	2				
13	1832-307-002-00	CHAIN/ROLLER60X060	*	2	2				
14	1728-307-026-10	GUIDE/CHAIN	*	2	2				
15	V600-110-620-60	BEARING,RB/6206	*	2	2				
16	1710-241-053-00	RING/SNAP/R62	*	2	2				
17	V744-120-400-80	SEAL,OIL/TC20408	*	2	2				
18	7827-205-010-00	SEAL/OIL	*	2	2				
19	1832-307-210-00	SHAFT/WHEEL COMP	*	2	2				
20	1480-207-011-00	WASHER/31X42X1	*	2	2				
21	V704-140-030-00	RING,SNAP/30 C	*	4	4				
22	V251-341-002-00	STUD/M10X20/7T	*	4	4				

FIG. 34 BRAKE SYSTEM

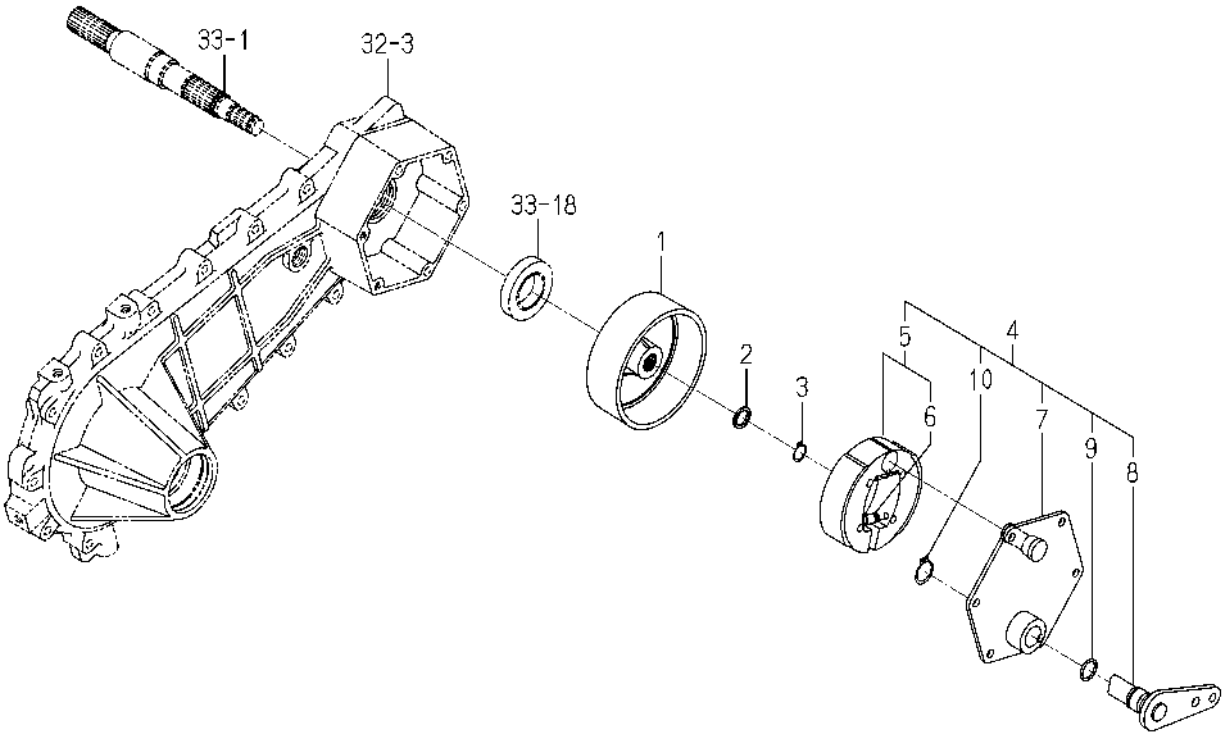

1832-310 -0100

KEY	PART CODE	DESCRIPTION	SPC	TYPE OF MODEL		ITC	COL	GRP	REMARKS
				SF224F	SF235F				
1	1832-310-001-00	DRUM/BRAKE	*	2	2				
2	1728-310-052-00	WASHER/17X22X03	*	2	2				
3	V704-140-016-00	RING,SNAP/16 C	*	2	2				
4	1832-310-210-00	BRAKE/114 ASSY	*	2	2				
5	1434-310-220-00	BRAKE/SHOE ASSY	*	2	2				
6	1427-310-001-00	SPRING,TENSION	*	4	4				
7	1427-310-220-10	COVER,BRAKE	*	2	2				
8	1832-310-220-00	PIN/CAM/BRAKE COMP	*	2	2				
9	V720-102-401-80	O-RING/1A,P18	*	2	2				
10	V704-140-022-00	RING,SNAP/22 C	*	2	2				

FIG. 35 PEDAL(BRAKE)SYSTEM

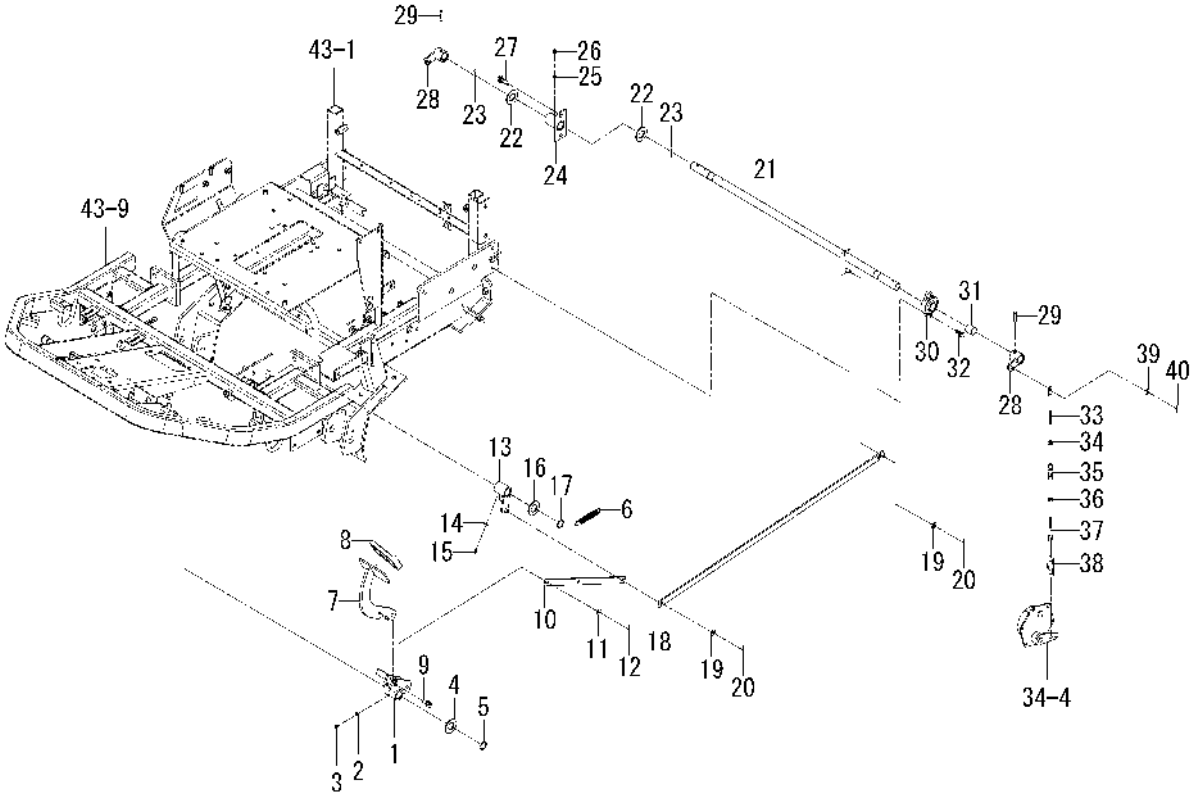

1832-312 -0100

KEY	PART CODE	DESCRIPTION	SPC	TYPE OF MODEL SF224F	TYPE OF MODEL SF235F	ITC	COL	GRP	REMARKS
1	1832-312-220-00	ARM/BRAKE COMP	*	1	1				
2	V411-260-006-00	WASHER,PL/M6	*	1	1				
3	V760-150-000-00	NIPPLE,GREASE	*	1	1				
4	V411-260-022-00	WASHER,PL/M22	*	1	1				
5	V704-140-022-00	RING,SNAP/22 C	*	1	1				
6	1650-135-002-00	SPRING/HE095	*	1	1				
7	1832-312-210-00	PEDAL/BRAKE COMP	*	1	1				
8	1524-122-001-10	PAD	*	1	1				
9	V231-361-002-00	FLANGEBOLT/M10X20	*	2	2				
10	1832-312-280-00	PLATE/BRAKE COMP	*	1	1				
11	V411-260-008-00	WASHER,PL/M8	*	1	1				
12	V500-162-502-00	PIN,SPLIT/2.5X20	*	1	1				
13	1832-312-230-00	ARM/COUNTER/BRAKE	*	1	1				
14	V411-260-006-00	WASHER,PL/M6	*	1	1				
15	V760-150-000-00	NIPPLE,GREASE	*	1	1				
16	V411-260-022-00	WASHER,PL/M22	*	1	1				
17	V704-140-022-00	RING,SNAP/22 C	*	1	1				
18	1832-312-002-00	PLATE/I/19X927	*	1	1				
19	V411-260-008-00	WASHER,PL/M8	*	2	2				
20	V500-162-502-00	PIN,SPLIT/2.5X20	*	2	2				
21	1832-312-240-10	SHAFT/BRAKE COMP	*	1	1				
22	V411-260-022-00	WASHER,PL/M22	*	2	2				
23	V500-164-003-00	PIN,SPLIT/4X30	*	2	2				
24	1832-312-270-00	HUB/BRAKE/SHAFT COMP	*	1	1				
25	V411-260-006-00	WASHER,PL/M6	*	1	1				
26	V760-150-000-00	NIPPLE,GREASE	*	1	1				
27	V211-561-002-00	BOLT,S/M10X20/7T	*	2	2				
28	1832-312-260-00	ARM/BRAKE/SHAFT COMP	*	2	2				
29	V530-160-803-20	PIN/GROOVE	*	2	2				
30	1832-312-003-00	RBB/FLANGE	*	1	1				

FIG. 35 PEDAL(BRAKE)SYSTEM

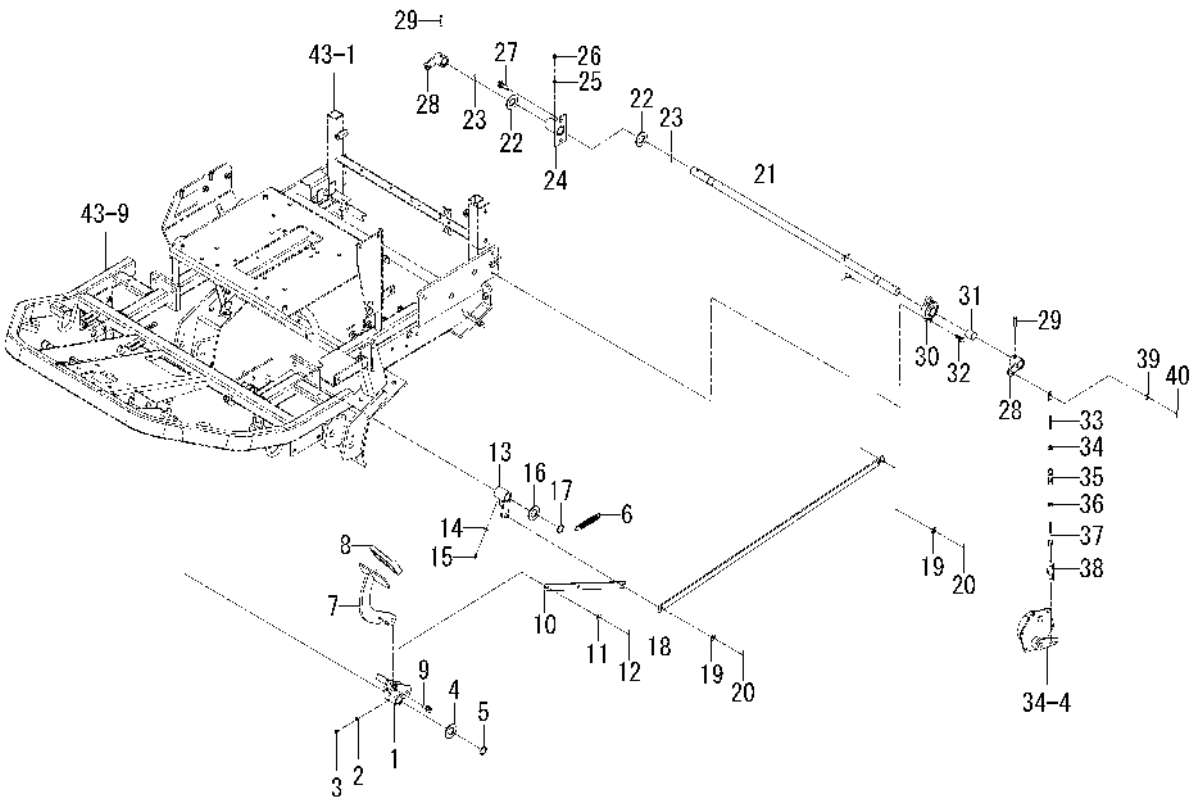

1832-312 -0100

KEY	PART CODE	DESCRIPTION	SPC	TYPE OF MODEL		ITC	COL	GRP	REMARKS
				SF224F	SF235F				
31	1725-433-202-10	BUSH/22X25X25	*	1	1				
32	V231-360-802-50	FLANGEBOLT/M8X25	*	1	1				
33	1742-504-004-00	ROD/M08X120	*	2	2				
34	V304-260-008-00	NUT/M8	*	2	2				
35	1444-122-002-00	TURNBUCKLE/M8	*	2	2				
36	1560-132-007-30	NUT/LH/M08	*	2	2				
37	3104-210-004-10	ROD/M08X72/LH	*	2	2				
38	2144-519-009-10	SPRING/HE060	*	2	2				
39	V411-260-008-00	WASHER,PL/M8	*	2	2				
40	V500-162-502-00	PIN,SPLIT/2.5X20	*	2	2				

FIG. 36 BRAKE(PARKING)SYSTEM

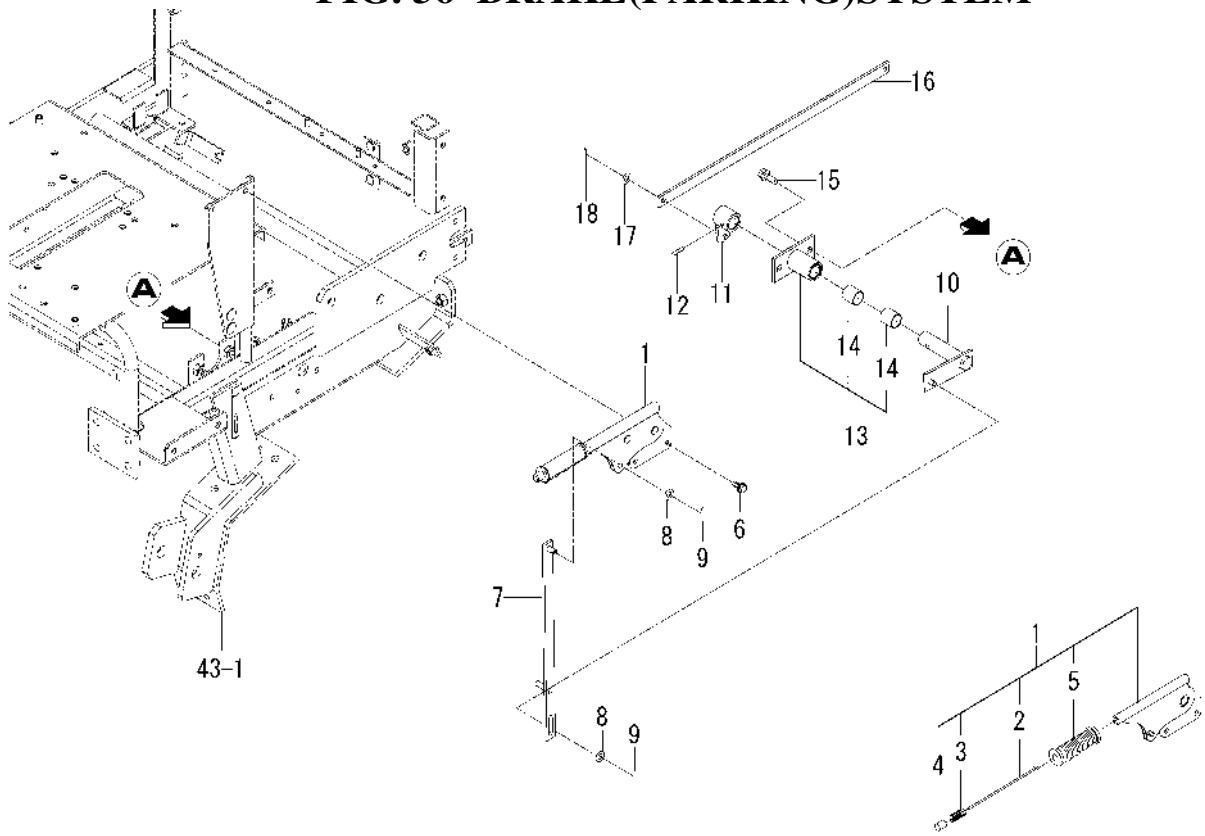

1832-313 -0100

KEY	PART CODE	DESCRIPTION	SPC	TYPE OF MODEL SF224F	TYPE OF MODEL SF235F	ITC	COL	GRP	REMARKS
1	1740-313-300-10	LEVER/PARKING ASSY	*	1	1				
2	1442-313-202-00	ROD	*	1	1				
3	1444-328-273-00	SPRING	*	1	1				
4	1444-328-272-00	BUTTON	*	1	1				
5	1740-313-301-00	GRIP/ORANGE	*	1	1				
6	V231-360-801-60	FLANGEBOLT/M8X16	*	2	2				
7	1832-313-210-00	PLATE/PARKING COMP	*	1	1				
8	V411-260-008-00	WASHER,PL/M8	*	2	2				
9	V500-162-502-00	PIN,SPLIT/2.5X20	*	2	2				
10	1832-313-220-00	ARM/PARKING COMP	*	1	1				
11	1832-312-260-00	ARM/BRAKE/SHAFT COMP	*	1	1				
12	V530-160-803-20	PIN/GROOVE	*	1	1				
13	1832-313-230-00	HUB/PARKING ASSY	*	1	1				
14	1725-433-202-10	BUSH/22X25X25	*	2	2				
15	V211-561-002-50	BOLT,S/M10X25/7T	*	2	2				
16	1832-313-001-10	PLATE/I/19X517	*	1	1				
17	V411-260-008-00	WASHER,PL/M8	*	1	1				
18	V500-162-502-00	PIN,SPLIT/2.5X20	*	1	1				

FIG. 37 WHEEL(FRONT)SYSTEM

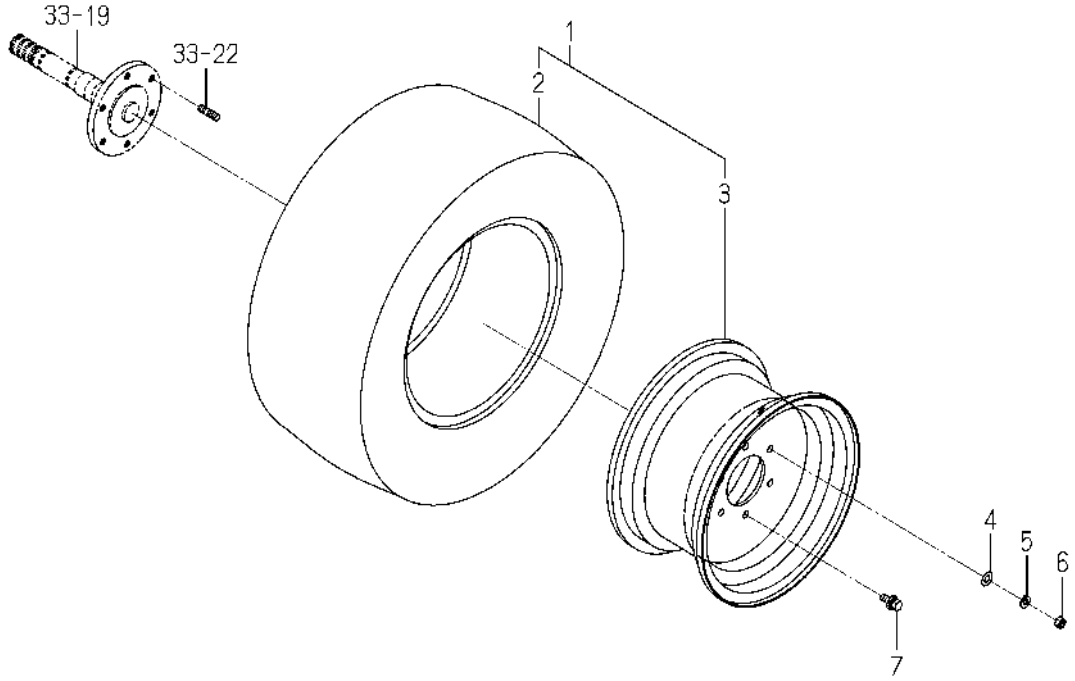

1832-317 -0100

KEY	PART CODE	DESCRIPTION	SPC	TYPE OF MODEL SF224F	TYPE OF MODEL SF235F	ITC	COL	GRP	REMARKS
1	1832-317-200-00	TIRE/23X10.5-12 ASSY	*	2	2		6G		
2	1728-317-251-00	TYRE/TURF/23-12	*	2	2				
3	1832-317-230-00	WHEEL/12XW7 COMP	*	2	2		6G		
4	V411-260-010-00	WASHER,PL/M10	*	4	4				
5	V401-160-010-00	WASHER,SP/M10	*	4	4				
6	V304-460-010-00	NUT/M10/7T	*	4	4				
7	V211-661-002-50	BOLT,SP/M10X25/7T	*	8	8				

FIG. 38 WHEEL(STEERING)SYSTEM

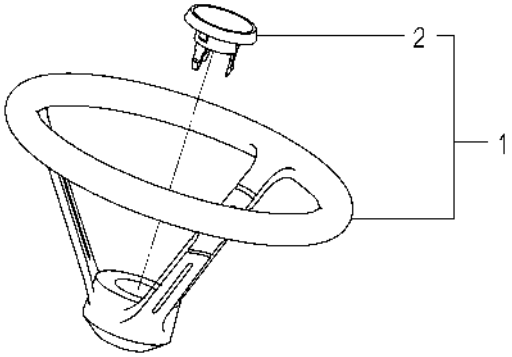

1739-401A-0100

KEY	PART CODE	DESCRIPTION	SPC	TYPE OF MODEL		ITC	COL	GRP	REMARKS
				SF224F	SF235F				
1	1739-401-700-00	WHEEL/STEERING ASSY	*	1	1				
2	1773-401-202-10	CAP/WHEEL	*	1	1				

FIG. 39 COLUMN(STEERING)SYSTEM

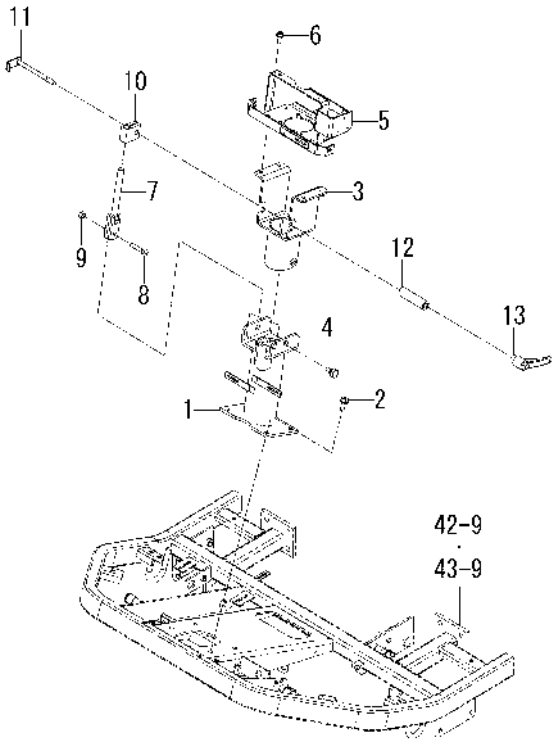

1832-405 -0100

KEY	PART CODE	DESCRIPTION	SPC	TYPE OF MODEL		ITC	COL	GRP	REMARKS
				SF224F	SF235F				
1	1832-405-210-00	COLUMN/STEERING/LOWE	*	1	1				
2	V231-361-002-00	FLANGEBOLT/M10X20	*	4	4				
3	1832-405-230-00	COLUMN/STEERING/UPPE	*	1	1				
4	1809-405-003-00	BOLT/M10X21	*	2	2				
5	1832-405-240-00	BRACKET/COVER COMP	*	1	1				
6	V231-360-801-60	FLANGEBOLT/M8X16	*	4	4				
7	1832-405-260-00	BAR/ROCK COMP	*	1	1				
8	V201-261-004-00	BOLT/M10X40	*	1	1				
9	V304-260-010-00	NUT/M10	*	1	1				
10	1809-405-004-20	STAY/ROCK	*	1	1				
11	1832-405-250-00	ROD/127 COMP	*	1	1				
12	1832-405-001-00	COLLAR/12X22X80	*	1	1				
13	1809-405-008-00	LEVER/TILT	*	1	1				

FIG. 40 CONTROLLER(STEERING)SET SYSTEM

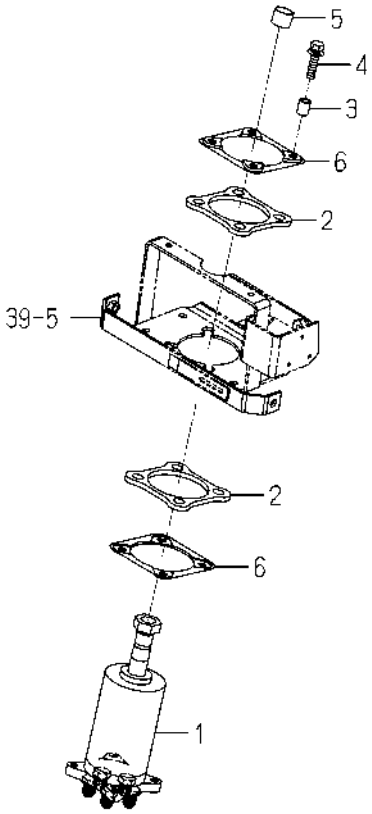

1771-407 -0100

KEY	PART CODE	DESCRIPTION	SPC	TYPE OF MODEL		ITC	COL	GRP	REMARKS
				SF224F	SF235F				
1	1771-407-200-00	CONTROLLER/STEERING	*	1	1				
2	1771-407-001-10	PAD/PS	*	2	2				
3	1739-407-074-00	COLLAR/08X12X15	*	4	4				
4	V211-660-803-50	BOLT,SP/M8X35/7T	*	4	4				
5	1739-401-001-00	INSULATOR/15	*	1	1				
6	1728-407-076-10	PLATE/CONTROLLER	*	2	2				

FIG. 41 CYLINDER(STEERING)SYSTEM

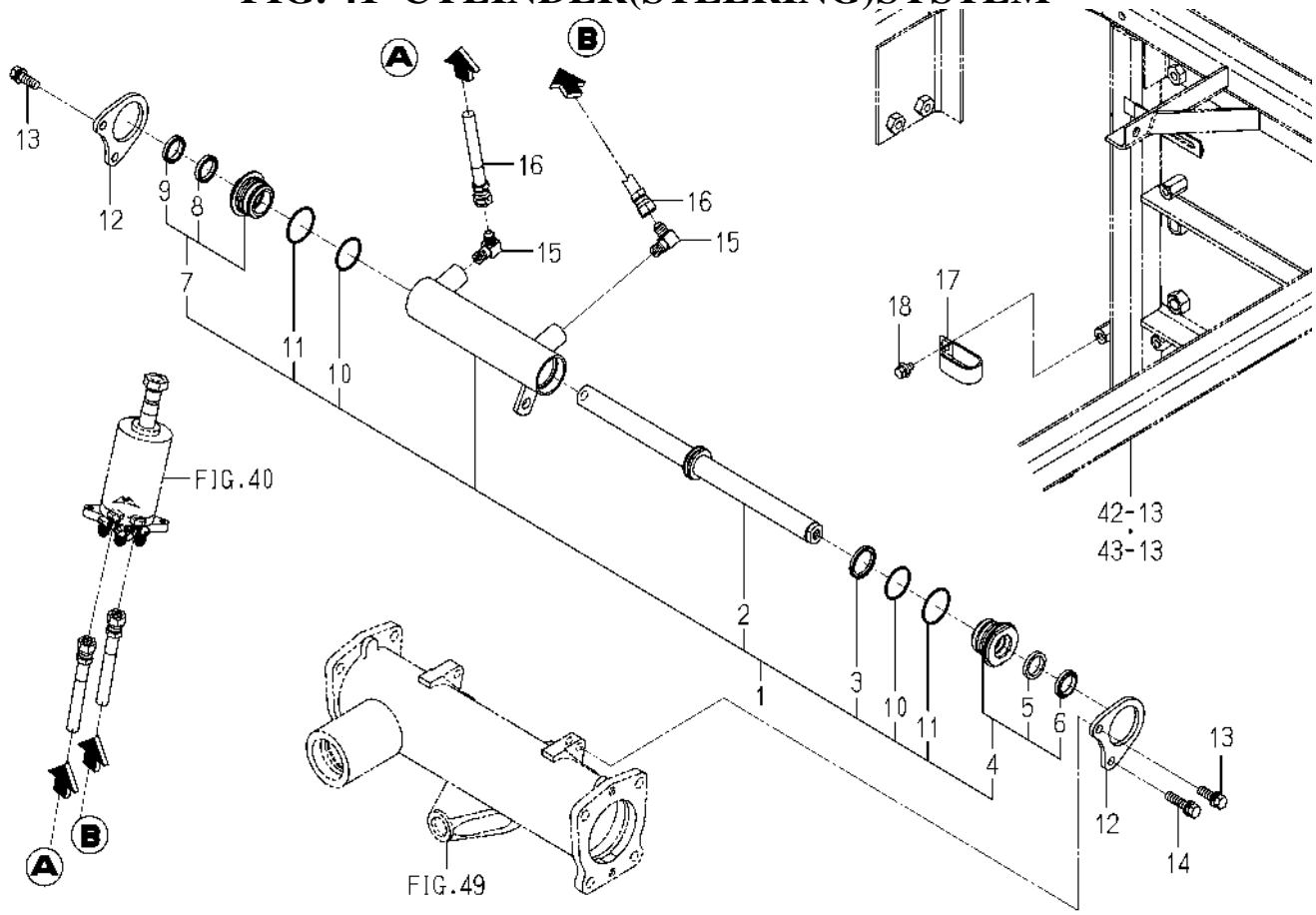

1832-408 -0100

KEY	PART CODE	DESCRIPTION	SPC	TYPE OF MODEL SF224F	TYPE OF MODEL SF235F	ITC	COL	GRP	REMARKS
1	K167-005-000-20	CYLINDER ASSY	*	1	1				
2	K167-005-200-10	ROD/PISTON	*	1	1				
3	K167-005-001-10	PACKING/PISTON	*	1	1				
4	K167-005-300-10	COVER/ROD/A SET	*	1	1				
5	K182-034-002-00	ROD PACKING	*	1	1				
6	K182-034-003-00	DUST SEAL	*	1	1				
7	K167-005-310-10	COVER/ROD/B SET	*	1	1				
8	K182-034-002-00	ROD PACKING	*	1	1				
9	K182-034-003-00	DUST SEAL	*	1	1				
10	V723-112-003-80	O-RING/1B,S38	*	2	2				
11	V723-102-004-20	O-RING/1A,S42	*	2	2				
12	1832-408-001-00	STAY/CYLINDER	*	2	2				
13	V211-561-003-00	BOLT,S/M10X30/7T	*	3	3				
14	V211-561-004-00	BOLT,S/M10X40/7T	*	1	1				
15	1728-408-001-00	ADAPTER/L/G1/4XR1/4	*	2	2				
16	1809-408-260-10	HOSE/HYDRO/3200 ASSY	*	2	2				
17	3650-261-001-00	CLAMP/28X55	*	2	2				
18	V211-660-801-60	BOLT,SP/M8X16/7T	*	2	2				

FIG. 42 FRAME SYSTEM(B TYPE)

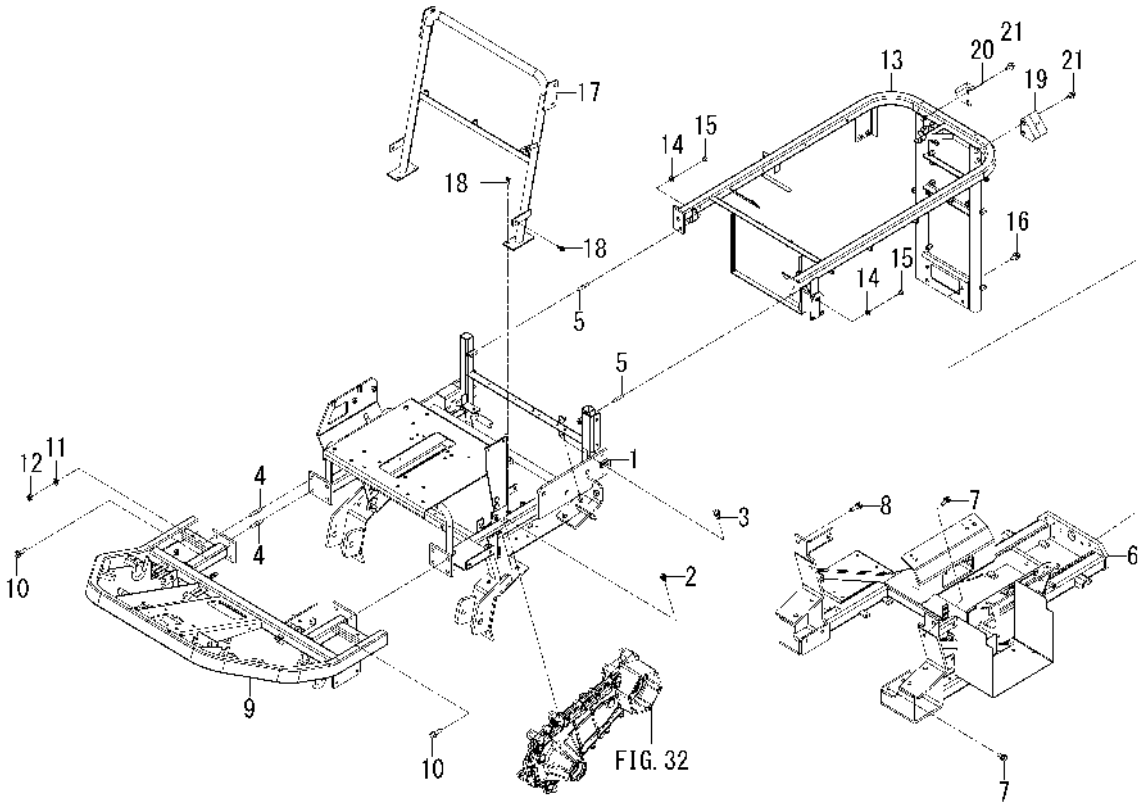

1832-410 -0100

KEY	PART CODE	DESCRIPTION	SPC	TYPE OF MODEL SF224F	TYPE OF MODEL SF235F	ITC	COL	GRP	REMARKS
1	1832-410-310-10	FRAME/MAIN COMP	*	1	1				
2	V211-661-002-50	BOLT,SP/M10X25/7T	*	12	12				
3	6901-931-225-00	BOLT,SEMS/M12X25/7T	*	4	4				
4	V251-341-203-20	STUD/M12X32/7T	*	2	2				
5	V251-341-002-00	STUD/M10X20/7T	*	2	2				
6	1832-410-210-10	FRAME/LOWER COMP	*	1	1				
7	6901-931-225-00	BOLT,SEMS/M12X25/7T	*	10	10				
8	6901-931-235-00	BOLT,SEMS/M12X35/7T	*	2	2				
9	1832-410-410-10	FRAME/FLOOR COMP	*	1	1		4L		
10	6901-931-235-00	BOLT,SEMS/M12X35/7T	*	6	6				
11	V401-160-012-00	WASHER,SP/M12	*	2	2				
12	V304-460-012-00	NUT/M12/7T	*	2	2				
13	1832-410-250-10	FRAME/UPPER COMP	*	1	1				
14	V401-160-010-00	WASHER,SP/M10	*	2	2				
15	V304-460-010-00	NUT/M10/7T	*	2	2				
16	6901-931-225-00	BOLT,SEMS/M12X25/7T	*	4	4				
17	1832-410-450-10	STAY/GUARD/CONTAINER	*	1	1				
18	V211-560-802-00	BOLT,S/M8X20/7T	*	6	6				
19	1832-410-001-00	STAY/COLLECTOR/LH	*	1	1				
20	1832-410-002-00	STAY/COLLECTOR/RH	*	1	1				
21	V211-361-002-50	BOLT,SP/M10X25	*	4	4				

FIG. 43 FRAME SYSTEM(EXCEPT B TYPE)

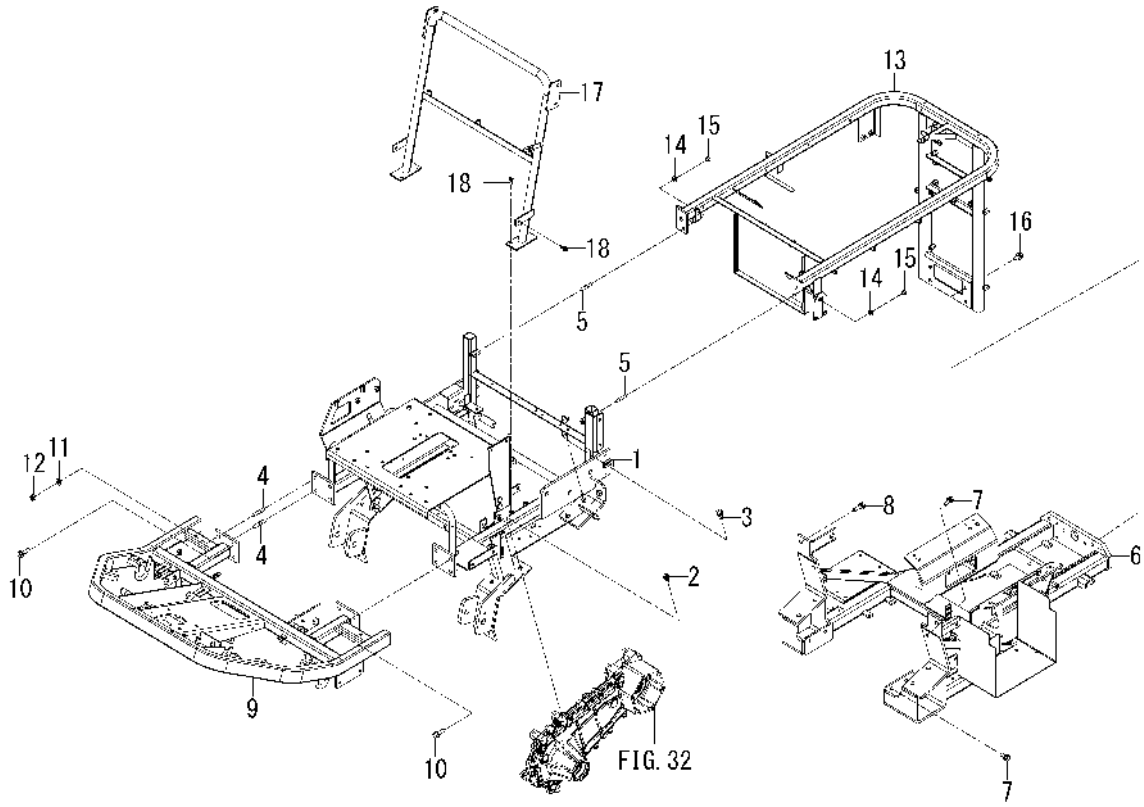

1832-410B-0100

KEY	PART CODE	DESCRIPTION	SPC	TYPE OF MODEL SF224F	TYPE OF MODEL SF235F	ITC	COL	GRP	REMARKS
1	1832-410-310-10	FRAME/MAIN COMP	*	1	1				
2	V211-661-002-50	BOLT,SP/M10X25/7T	*	12	12				
3	6901-931-225-00	BOLT,SEMS/M12X25/7T	*	4	4				
4	V251-341-203-20	STUD/M12X32/7T	*	2	2				
5	V251-341-002-00	STUD/M10X20/7T	*	2	2				
6	1832-410-210-10	FRAME/LOWER COMP	*	1	1				
7	6901-931-225-00	BOLT,SEMS/M12X25/7T	*	10	10				
8	6901-931-235-00	BOLT,SEMS/M12X35/7T	*	2	2				
9	1832-410-410-10	FRAME/FLOOR COMP	*	1	1		4L		
10	6901-931-235-00	BOLT,SEMS/M12X35/7T	*	6	6				
11	V401-160-012-00	WASHER,SP/M12	*	2	2				
12	V304-460-012-00	NUT/M12/7T	*	2	2				
13	1832-410-250-10	FRAME/UPPER COMP	*	1	1				
14	V401-160-010-00	WASHER,SP/M10	*	2	2				
15	V304-460-010-00	NUT/M10/7T	*	2	2				
16	6901-931-225-00	BOLT,SEMS/M12X25/7T	*	4	4				
17	1832-410-450-10	STAY/GUARD/CONTAINER	*	1	1				
18	V211-560-802-00	BOLT,S/M8X20/7T	*	6	6				

FIG. 44 COVER(SIDE)SYSTEM(B TYPE)

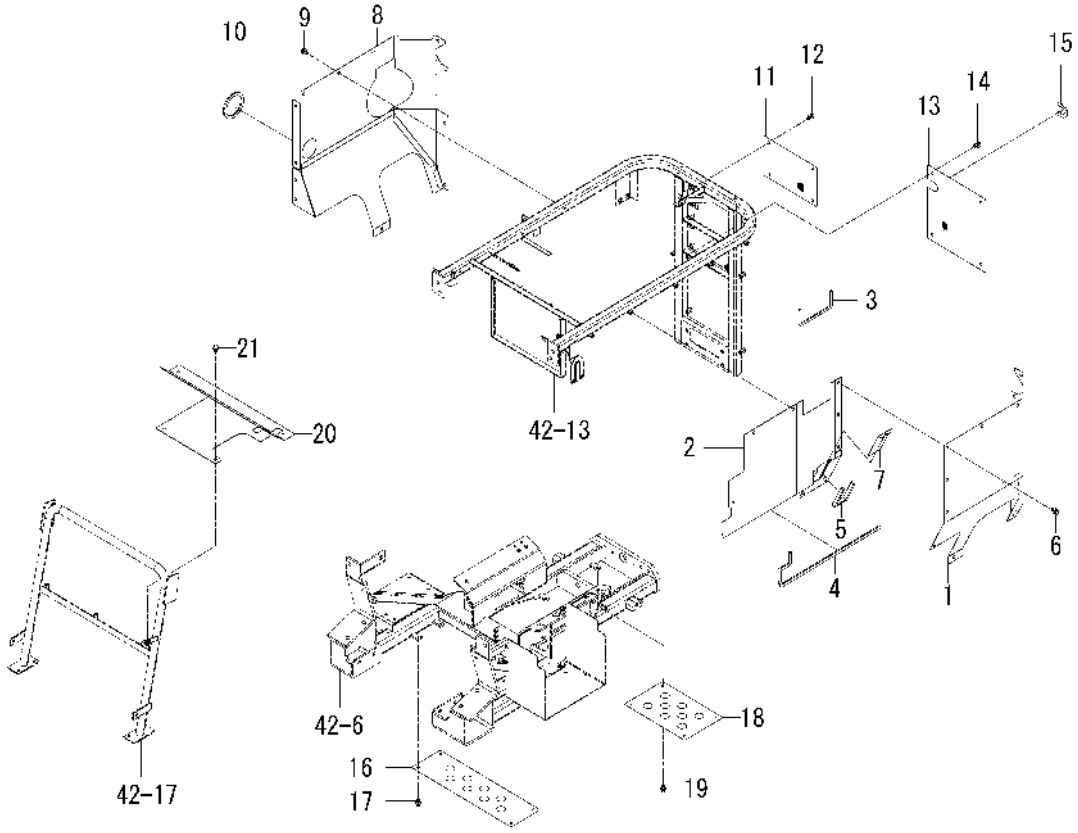

1832-411 -0100

KEY	PART CODE	DESCRIPTION	SPC	TYPE OF MODEL SF224F	TYPE OF MODEL SF235F	ITC	COL	GRP	REMARKS
1	1832-411-240-20	COVER/SIDE/LH/R COMP	*	1	1		7F		
2	1832-411-260-10	COVER/SIDE/LH/F COMP	*	1	1		7F		
3	1763-601-003-00	TRIM/230	*	1	1				
4	2521-730-025-00	INSULATOR/550	*	1	1				
5	1741-604-012-00	INSULATOR/210	*	1	1				
6	V211-360-801-60	BOLT,SP/M8X16	*	16	16				
7	1832-411-007-00	PLATE/COVER	*	1	1				
8	1832-411-250-20	COVER/SIDE/RH COMP	*	1	1		7F		
9	V211-360-801-60	BOLT,SP/M8X16	*	12	12				
10	1806-102-008-00	TRIM/230	*	1	1				
11	1832-411-001-10	COVER/REAR/UPPER	*	1	1		7F		
12	V211-370-801-60	BOLT,SP/M8X16	*	4	4				
13	1832-411-002-10	COVER/REAR/UNDER	*	1	1		7F		
14	V211-370-801-60	BOLT,SP/M8X16	*	4	4				
15	1685-604-003-00	INSULATOR/90	*	1	1				
16	1832-411-003-00	GUARD/UNDER/FRONT	*	1	1				
17	V211-360-801-60	BOLT,SP/M8X16	*	4	4				
18	1832-411-004-00	GUARD/UNDER/REAR	*	1	1				
19	V211-360-801-60	BOLT,SP/M8X16	*	4	4				
20	1832-411-005-00	COVER/CHUTE/SIDE	*	1	1		7F		
21	V211-360-801-60	BOLT,SP/M8X16	*	4	4				

FIG. 45 COVER(SIDE)SYSTEM(EXCEPT B TYPE)

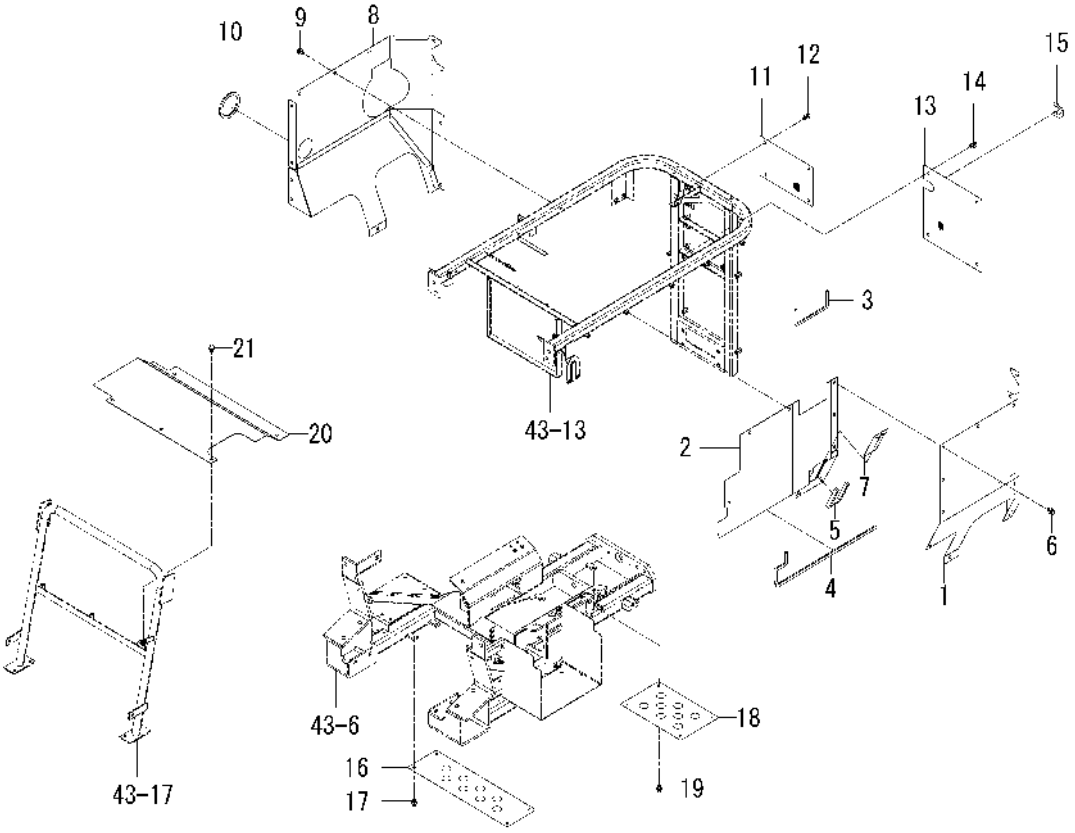

1832-411B-0100

KEY	PART CODE	DESCRIPTION	SPC	TYPE OF MODEL SF224F	TYPE OF MODEL SF235F	ITC	COL	GRP	REMARKS
1	1832-411-240-20	COVER/SIDE/LH/R COMP	*	1	1		7F		
2	1832-411-260-10	COVER/SIDE/LH/F COMP	*	1	1		7F		
3	1763-601-003-00	TRIM/230	*	1	1				
4	2521-730-025-00	INSULATOR/550	*	1	1				
5	1741-604-012-00	INSULATOR/210	*	1	1				
6	V211-360-801-60	BOLT,SP/M8X16	*	16	16				
7	1832-411-007-00	PLATE/COVER	*	1	1				
8	1832-411-250-20	COVER/SIDE/RH COMP	*	1	1		7F		
9	V211-360-801-60	BOLT,SP/M8X16	*	12	12				
10	1806-102-008-00	TRIM/230	*	1	1				
11	1832-411-001-10	COVER/REAR/UPPER	*	1	1		7F		
12	V211-370-801-60	BOLT,SP/M8X16	*	4	4				
13	1832-411-002-10	COVER/REAR/UNDER	*	1	1		7F		
14	V211-370-801-60	BOLT,SP/M8X16	*	4	4				
15	1685-604-003-00	INSULATOR/90	*	1	1				
16	1832-411-003-00	GUARD/UNDER/FRONT	*	1	1				
17	V211-360-801-60	BOLT,SP/M8X16	*	4	4				
18	1832-411-004-00	GUARD/UNDER/REAR	*	1	1				
19	V211-360-801-60	BOLT,SP/M8X16	*	4	4				
20	1832-411-006-00	COVER/CHUTE/SIDE/W	*	1	1		7F		
21	V211-360-801-60	BOLT,SP/M8X16	*	5	5				

FIG. 46 MUD GUARD SYSTEM

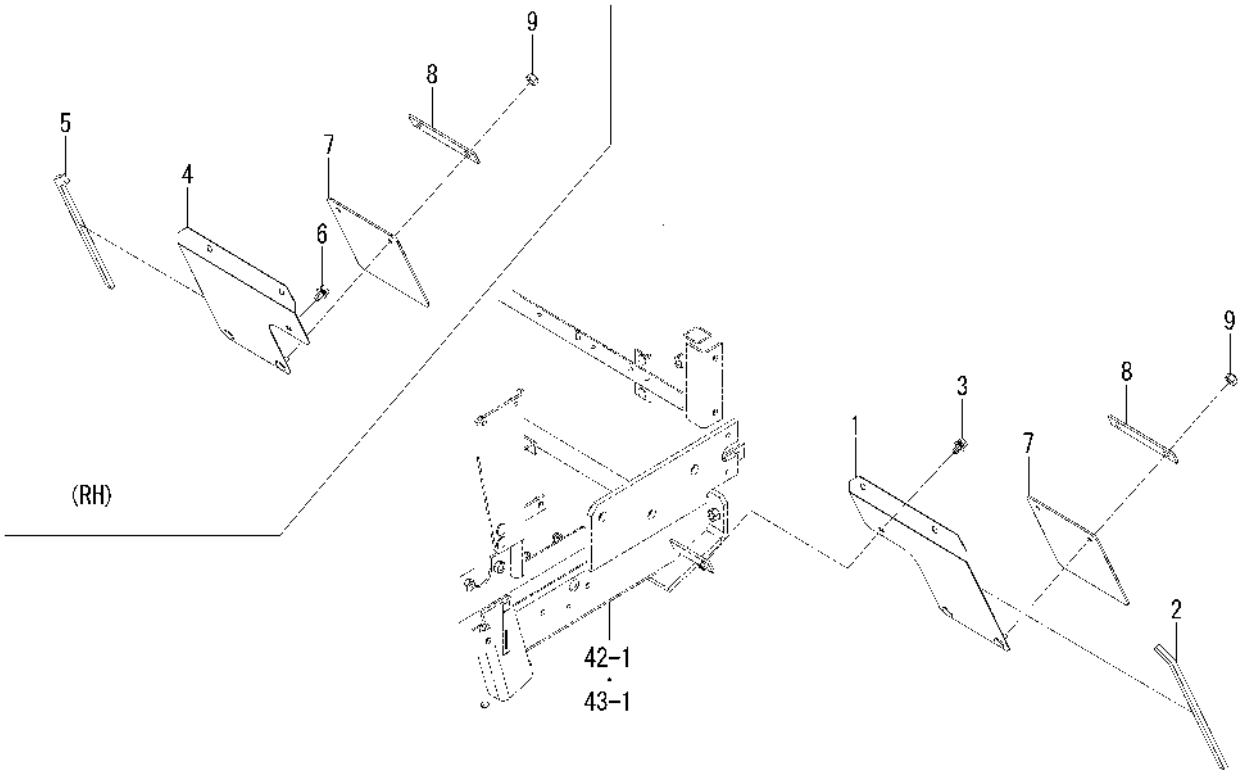

1832-412 -0100

KEY	PART CODE	DESCRIPTION	SPC	TYPE OF MODEL SF224F	TYPE OF MODEL SF235F	ITC	COL	GRP	REMARKS
1	1832-412-210-10	MUDGUARD/LH COMP	*	1	1				
2	1764-603-002-00	INSULATOR/240	*	1	1				
3	V211-360-801-60	BOLT,SP/M8X16	*	3	3				
4	1832-412-230-10	MUDGUARD/RH COMP	*	1	1				
5	1764-603-002-00	INSULATOR/240	*	1	1				
6	V211-360-801-60	BOLT,SP/M8X16	*	3	3				
7	1832-412-001-00	GUARD/RUBBER	*	2	2				
8	1832-412-002-00	PLATE/I/19X115	*	2	2				
9	1719-312-001-00	U-NUT	*	4	4				

FIG. 47 LEVER(4WD)SYSTEM

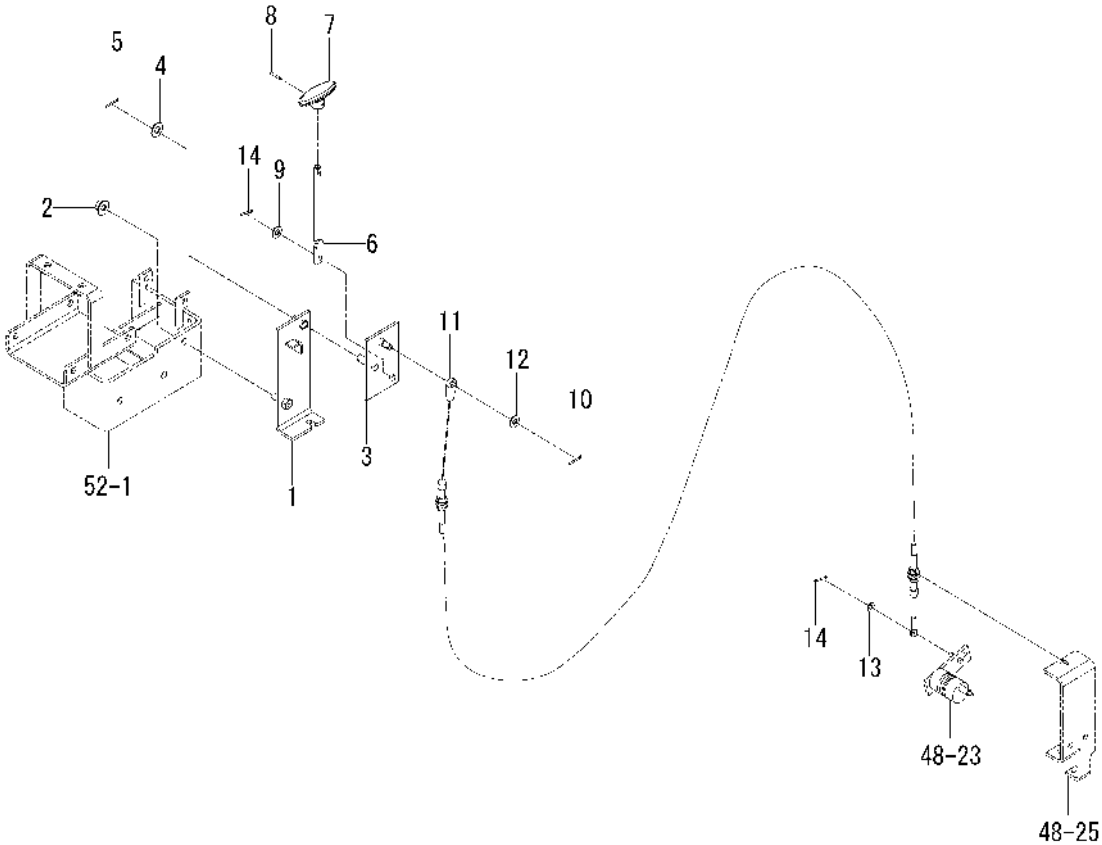

1832-430 -0100

KEY	PART CODE	DESCRIPTION	SPC	TYPE OF MODEL SF224F	TYPE OF MODEL SF235F	ITC	COL	GRP	REMARKS
1	1832-430-210-00	BRACKET/LEVER/4WD	*	1	1				
2	V363-260-010-00	NUT/WASHER/M10	*	1	1				
3	1832-430-220-00	ARM/4WD COMP	*	1	1				
4	V411-260-010-00	WASHER,PL/M10	*	1	1				
5	V500-162-502-00	PIN,SPLIT/2.5X20	*	1	1				
6	1832-430-001-00	ROD/4WD	*	1	1				
7	1773-267-002-00	GRIP/4WD	*	1	1				
8	V580-140-301-80	PIN,SPRING/3X18 W	*	1	1				
9	V411-260-008-00	WASHER,PL/M8	*	1	1				
10	V500-162-502-00	PIN,SPLIT/2.5X20	*	1	1				
11	1832-430-230-00	CABLE/4WD/LOCK ASSY	*	1	1				
12	V411-260-008-00	WASHER,PL/M8	*	1	1				
13	V411-260-006-00	WASHER,PL/M6	*	1	1				
14	V500-162-502-00	PIN,SPLIT/2.5X20	*	2	2				

FIG. 48 AUTO(4WD)SYSTEM

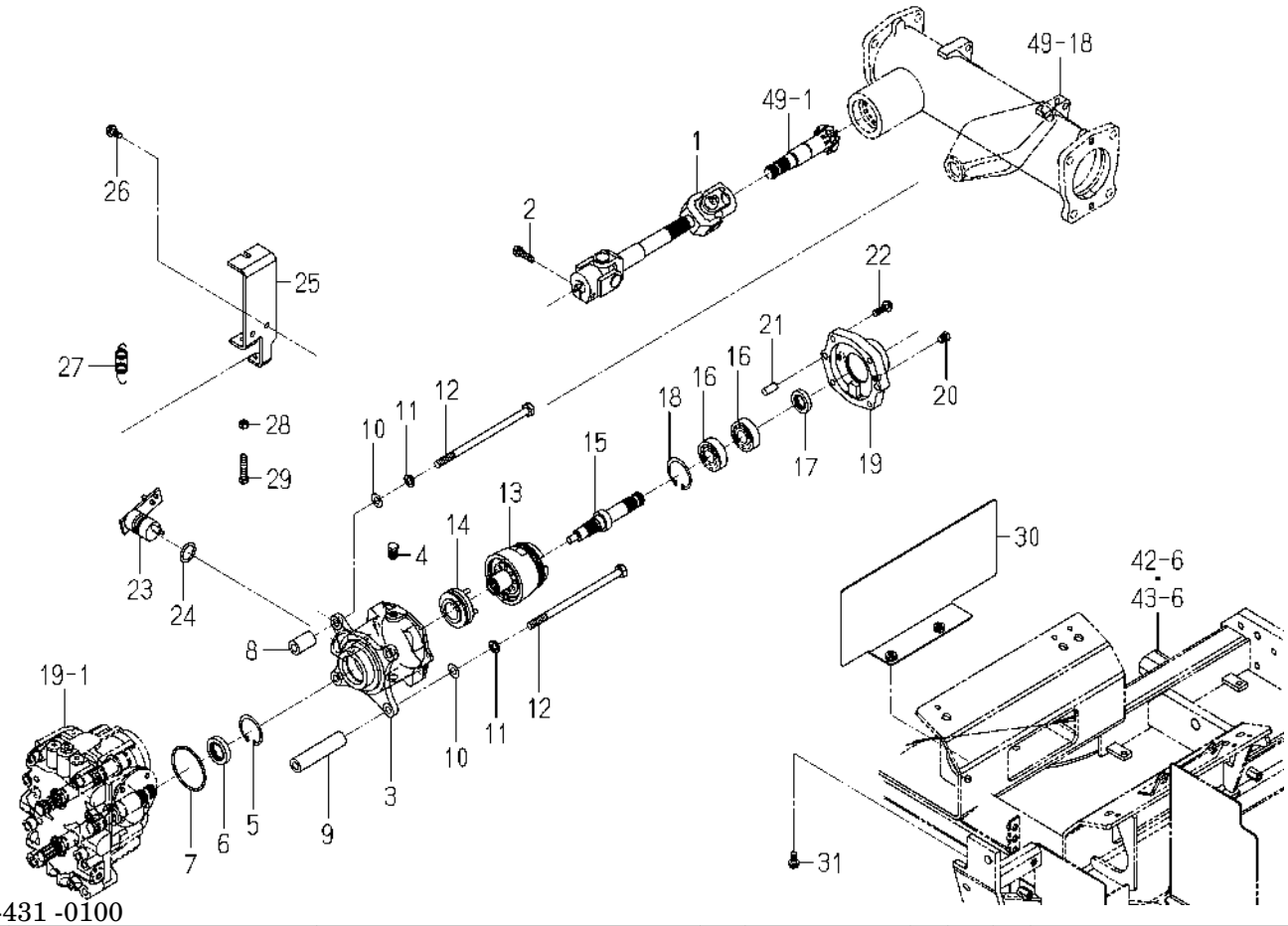

1832-431 -0100

KEY	PART CODE	DESCRIPTION	SPC	TYPE OF MODEL SF224F	TYPE OF MODEL SF235F	ITC	COL	GRP	REMARKS
1	1832-431-210-00	SHAFT/4WD ASSY	*	1	1				
2	2213-312-013-00	BOLT/SEAL/M8X30X9T	*	2	2				
3	1832-431-003-00	CASE/4WD	*	1	1				
4	V782-160-000-4B	PLUG/SCREW/SEAL	*	2	2				
5	V705-140-045-00	RING,SNAP/45 C	*	1	1				
6	V744-125-450-80	SEAL,OIL/TC25458	*	1	1				
7	V721-103-106-50	O-RING/1A,G65	*	1	1				
8	1832-431-004-00	HUB/12X22X30	*	2	2				
9	1832-431-005-00	HUB/12X22X97	*	2	2				
10	V411-260-010-00	WASHER,PL/M10	*	4	4				
11	V401-160-010-00	WASHER,SP/M10	*	4	4				
12	1832-431-006-00	BOLT/M10X190	*	4	4				
13	1720-221-210-00	CLUTCH ASSY	*	1	1				FIG 084
14	1720-221-230-00	SLEEVE ASSY	*	1	1				
15	1832-431-001-00	SHAFT/OUTPUT	*	1	1				
16	V600-110-620-40	BEARING,RB/6204	*	2	2				
17	V744-120-350-70	SEAL,OIL/TC20357	*	1	1				
18	V705-140-047-00	RING,SNAP/47 C	*	1	1				
19	1832-431-002-00	METAL/4WD	*	1	1				
20	V782-160-000-2B	PLUG/SCREW/SEAL	*	2	2				
21	V523-101-002-20	PIN,ST,B/10X22	*	2	2				
22	V231-360-802-50	FLANGEBOLT/M8X25	*	4	4				
23	1832-431-220-00	ARM/4WD COMP	*	1	1				
24	V720-103-502-40	O-RING/1A,P24	*	1	1				
25	1832-431-007-00	PLATE	*	1	1				
26	V231-360-801-60	FLANGEBOLT/M8X16	*	2	2				
27	1560-531-020-00	SPRING/HE068	*	1	1				
28	V304-260-008-00	NUT/M8	*	1	1				
29	V201-360-804-00	BOLT/M8X40/7T	*	1	1				
30	1832-431-230-10	COVER/4WD COMP	*	1	1		7F		

FIG. 48 AUTO(4WD)SYSTEM

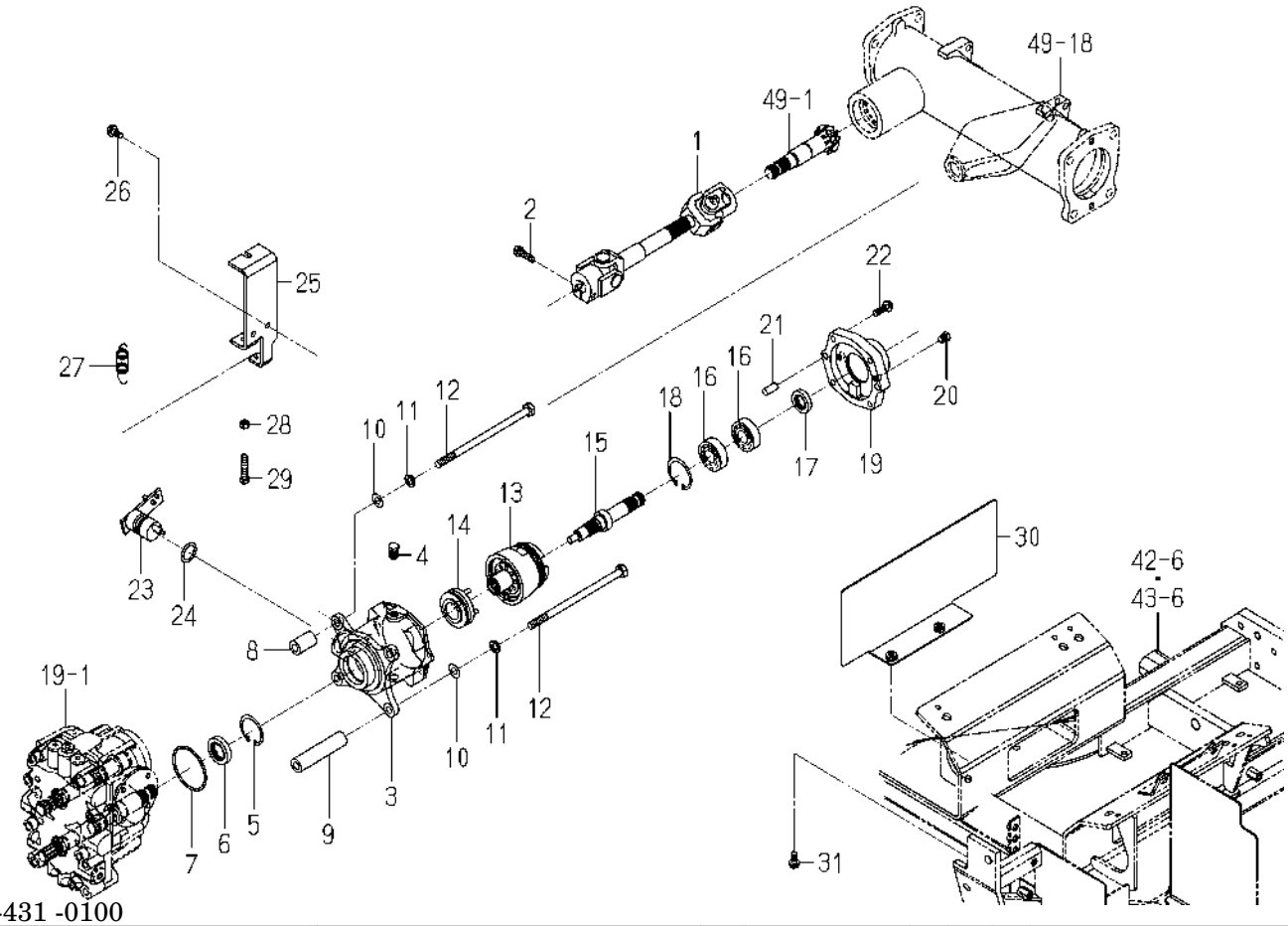

1832-431 -0100

KEY	PART CODE	DESCRIPTION	SPC	TYPE OF MODEL SF224F	TYPE OF MODEL SF235F	ITC	COL	GRP	REMARKS
31	V231-360-801-60	FLANGEBOLT/M8X16	*	2	2				

FIG. 49 HOUSING(AXLE/REAR)SYSTEM(1/3)

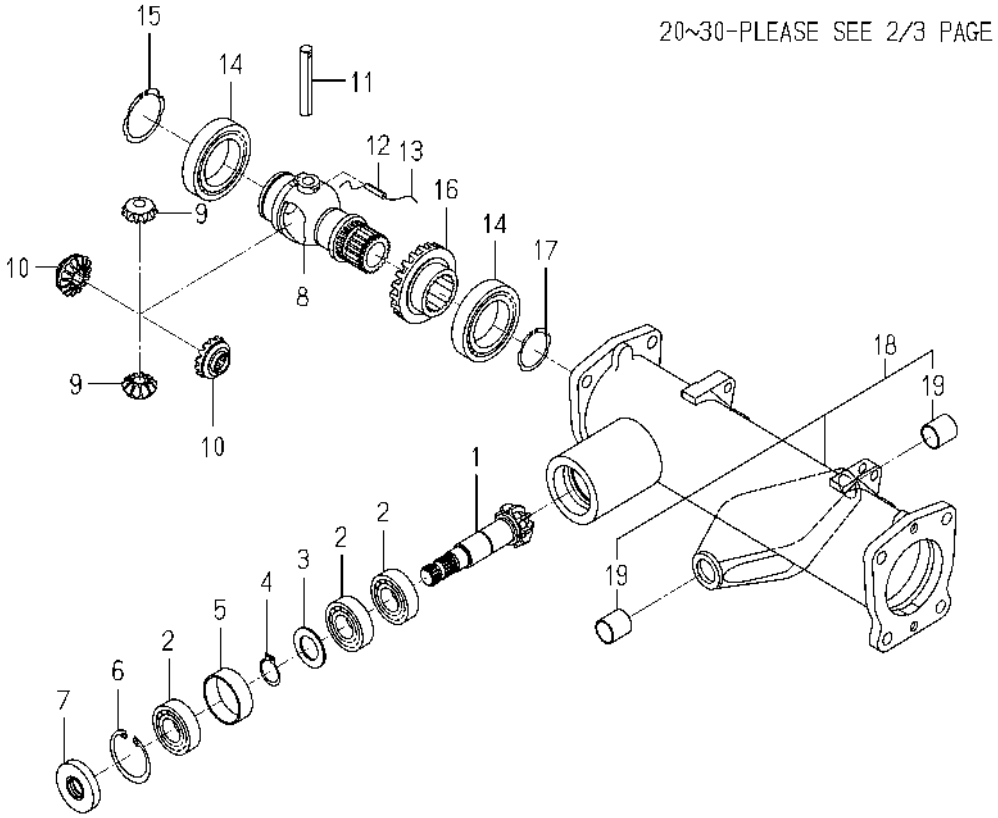

1832-433 -0100

KEY	PART CODE	DESCRIPTION	SPC	TYPE OF MODEL SF224F	TYPE OF MODEL SF235F	ITC	COL	GRP	REMARKS
1	1725-432-101-00	PINION/BEVEL/09	*	1	1				
2	1773-434-012-00	BEARING/BALL	*	3	3				
3	1725-432-110-00	WASHER/25X42X02	*	1	1				
4	1725-218-109-00	RING/SNAP/CS25	*	1	1				
5	1725-432-107-00	COLLAR/48X52X17	*	1	1				
6	1725-219-121-00	RING/SNAP/CR52	*	1	1				
7	1776-432-003-00	SEAL/OIL	*	1	1				
8	1725-432-711-00	CASE/DIFFERENTIAL/FR	*	1	1				
9	1725-432-712-10	PINION/BEVEL/11	*	2	2				
10	1725-432-713-00	GEAR/BEVEL/15	*	2	2				
11	1725-432-714-00	PIN/12X75	*	1	1				
12	1725-432-715-00	PIN/SPRING	*	1	1				
13		WIRE	*	1	1				
14	1725-432-801-00	BEARING/6010/KBC	*	2	2				
15	1725-432-113-00	RING/SNAP/CS50	*	1	1				
16	1725-432-108-00	GEAR/BEVEL/21	*	1	1				
17	1725-432-114-00	RING/SNAP/CS40	*	1	1				
18	1832-433-200-00	HOUSING/AXLE ASSY	*	1	1				
19	1725-433-202-10	BUSH/22X25X25	*	2	2				
20	1725-434-101-00	CASE/FINAL/UPPER/LH	*	1	1				
21	1725-434-114-00	RING/O/1A/G90	*	1	1				
22	1725-434-115-00	BOLT/S/M12X30	*	4	4				
23	1725-304-713-00	PIN/B	*	2	2				
24	1725-434-111-00	CASE/FINAL/UPPER/RH	*	1	1				
25	1725-434-114-00	RING/O/1A/G90	*	1	1				
26	1725-434-115-00	BOLT/S/M12X30	*	4	4				
27	1725-304-713-00	PIN/B	*	2	2				
28	1832-434-001-00	GEAR/BEVEL/11	*	2	2				
29	1725-434-116-00	BEARING/6206/KBC	*	2	2				
30	1725-308-103-00	RING/SNAP/CR62	*	2	2				

FIG. 49 HOUSING(AXLE/REAR)SYSTEM(2/3)

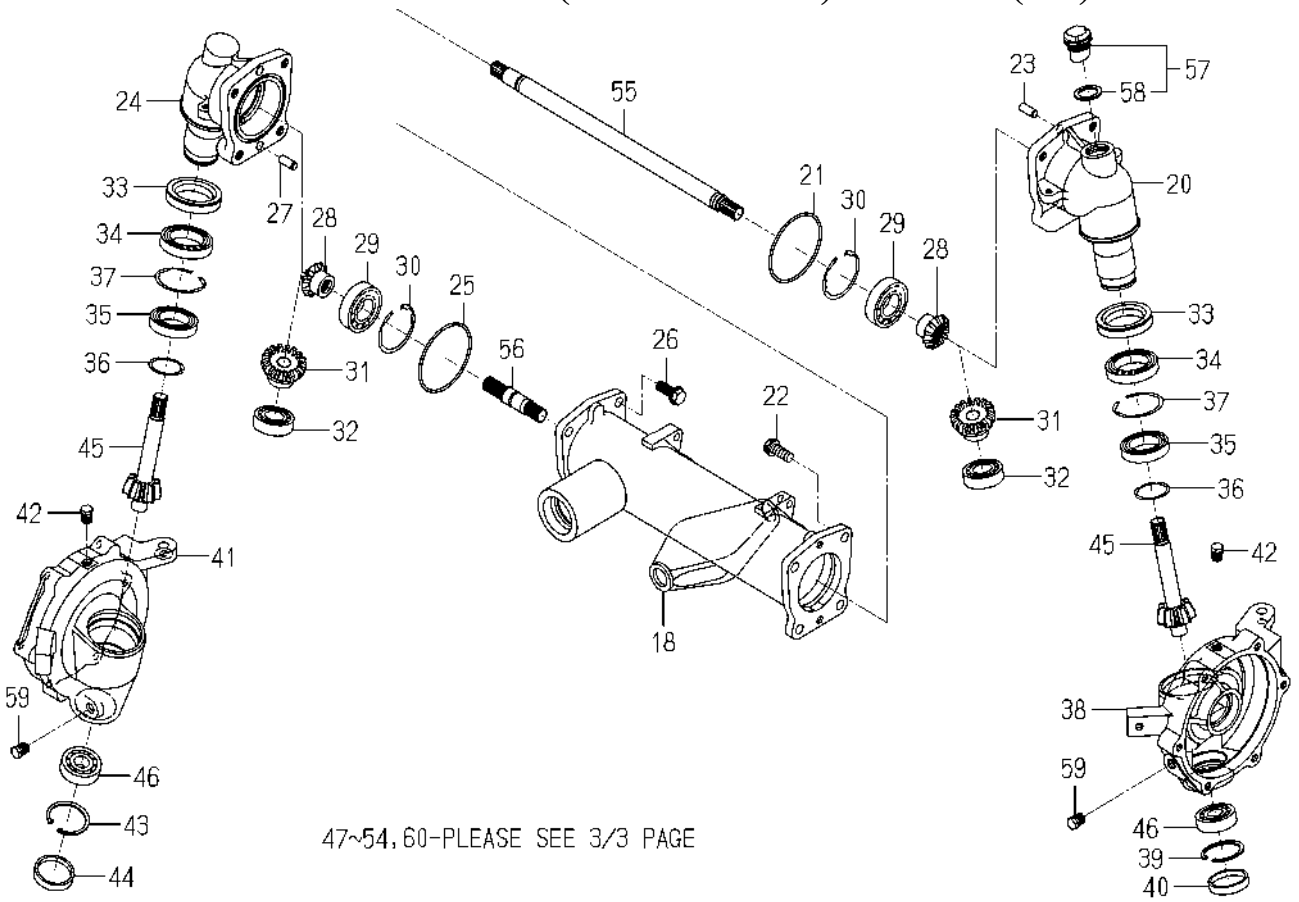

1832-433 -0100

KEY	PART CODE	DESCRIPTION	SPC	TYPE OF MODEL SF224F	TYPE OF MODEL SF235F	ITC	COL	GRP	REMARKS
31	1832-434-002-00	GEAR/BEVEL/17	*	2	2				
32	1725-201-806-00	BEARING/6205/KBC	*	2	2				
33	1725-434-005-00	SEAL/OIL ASSY	*	2	2				
34	1725-434-047-00	BEARING/BALL/6909	*	2	2				
35	1836-432-204-00	R.B.B/6908/KOYO	*	2	2				
36	1725-432-114-00	RING/SNAP/CS40	*	2	2				
37	1725-308-103-00	RING/SNAP/CR62	*	2	2				
38	1832-434-102-00	CASE/FINAL/LOWER/LH	*	1	1				
39	1725-219-121-00	RING/SNAP/CR52	*	1	1				
40	1725-434-122-00	PLUG/52X10	*	1	1				
41	1832-434-101-00	CASE/FINAL/LOWER/RH	*	1	1				
42	1725-434-121-00	PLUG/SCREW/R1/4	*	2	2				
43	1725-219-121-00	RING/SNAP/CR52	*	1	1				
44	1725-434-122-00	PLUG/52X10	*	1	1				
45	1725-434-113-00	GEAR/BEVEL/09	*	2	2				
46	1725-219-122-00	BEARING/6304/KBC	*	2	2				
47	1725-434-106-00	SHAFT/WHEEL	*	2	2				
48	1725-434-107-00	GEAR/BEVEL/35	*	2	2				
49	1725-434-123-00	WASHER/27X36X03	*	4	4				
50	1725-434-013-00	SEAL/OIL ASSY	*	2	2				
51	1725-201-806-00	BEARING/6205/KBC	*	2	2				
52	1725-434-116-00	BEARING/6206/KBC	*	2	2				
53	1725-434-108-00	COVER/WHEEL	*	2	2				
54	1725-434-124-00	BOLT/SP/M10X30	*	12	12				
55	1832-434-004-00	SHAFT/450	*	1	1				
56	1832-434-003-00	SHAFT/100	*	1	1				
57	1518-432-250-10	CAP,OIL	*	1	1				
58	1518-306-203-10	PACKING	*	1	1				
59	V782-160-000-4B	PLUG/SCREW/SEAL	*	2	2				
60	1832-433-250-00	PIN/PIVOT COMP	*	1	1				

FIG. 49 HOUSING(AXLE/REAR)SYSTEM(3/3)

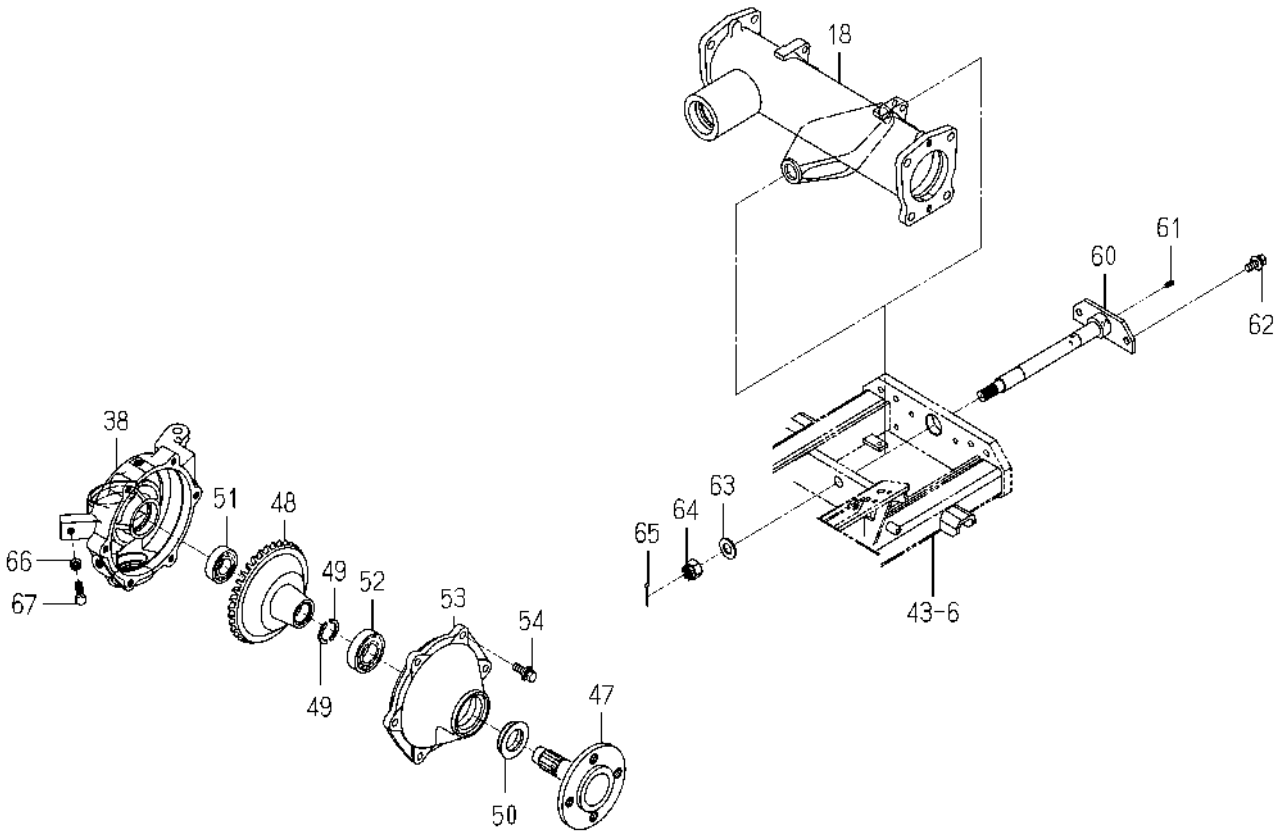

1832-433 -0100

KEY	PART CODE	DESCRIPTION	SPC	TYPE OF MODEL SF224F	TYPE OF MODEL SF235F	ITC	COL	GRP	REMARKS
61	V760-150-000-00	NIPPLE,GREASE	*	1	1				
62	V211-661-002-50	BOLT,SP/M10X25/7T	*	2	2				
63	V411-260-016-00	WASHER,PL/M16	*	1	1				
64	V327-261-216-00	NUT,CASTLE/M16 P=1.5	*	1	1				
65	V500-164-003-00	PIN,SPLIT/4X30	*	1	1				
66	V304-460-010-00	NUT/M10/7T	*	2	2				
67	V201-461-003-50	BOLT/M10X35/9T	*	2	2				

FIG. 50 ROD(TIE)SYSTEM

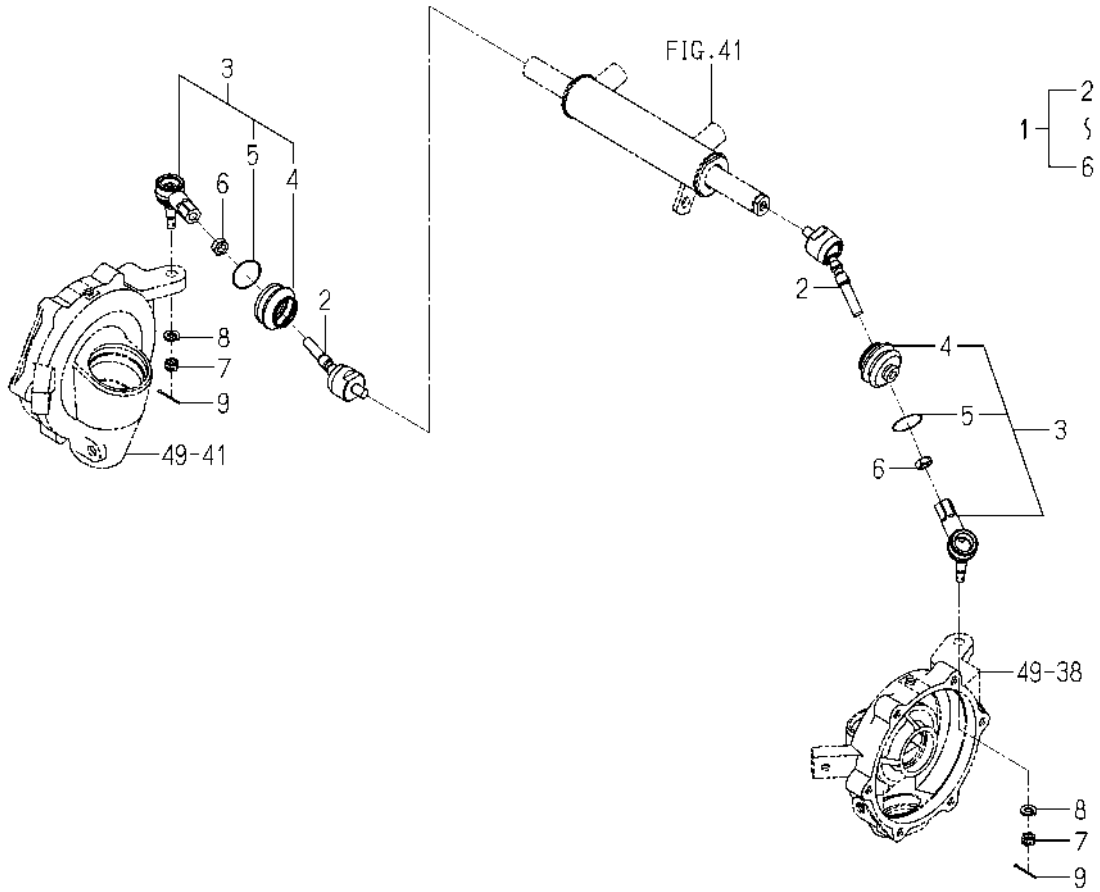

1725-436A-0100

KEY	PART CODE	DESCRIPTION	SPC	TYPE OF MODEL SF224F	TYPE OF MODEL SF235F	ITC	COL	GRP	REMARKS
1	1725-436-600-00	RODEND/137 ASSY	*	2	2				
2	1725-436-320-00	RODEND/B ASSY	*	2	2				
3	1725-436-610-00	RACKEND ASSY	*	2	2				
4	1725-436-611-00	COVER/DUST	*	2	2				
5	1725-436-612-00	RING/36	*	2	2				
6	1725-436-601-00	NUT/M12X1.25	*	2	2				
7	V327-262-110-00	NUT,CASTLE/M10 P1.25	*	2	2				
8	V401-160-010-00	WASHER,SP/M10	*	2	2				
9	V500-162-502-00	PIN,SPLIT/2.5X20	*	2	2				

FIG. 51 WHEEL(REAR)SYSTEM

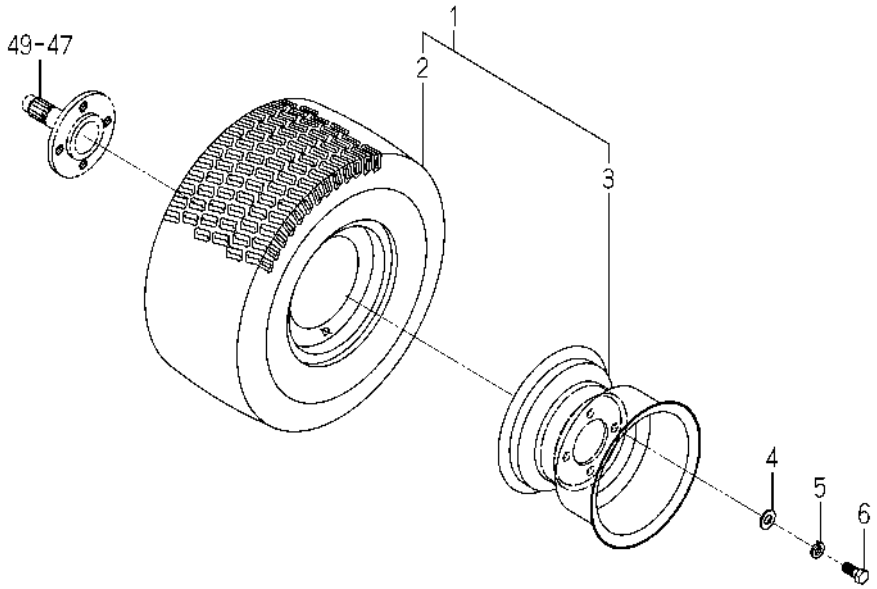

1832-441 -0100

KEY	PART CODE	DESCRIPTION	SPC	TYPE OF MODEL SF224F	TYPE OF MODEL SF235F	ITC	COL	GRP	REMARKS
1	1832-441-200-00	TIRE/F/18X8.50- ASSY	*	2	2		6G		
2	1728-441-701-10	TIRE/TURF/18X8.50-8	*	2	2				
3	1832-441-230-00	WHEEL/8X7 COMP	*	2	2		6G		
4	V411-260-014-00	WASHER,PL/M14	*	8	8				
5	V401-160-014-00	WASHER,SP/M14	*	8	8				
6	1832-441-001-00	BOLT/M14X1.5X30	*	8	8				

FIG. 52 CONTROL SYSTEM

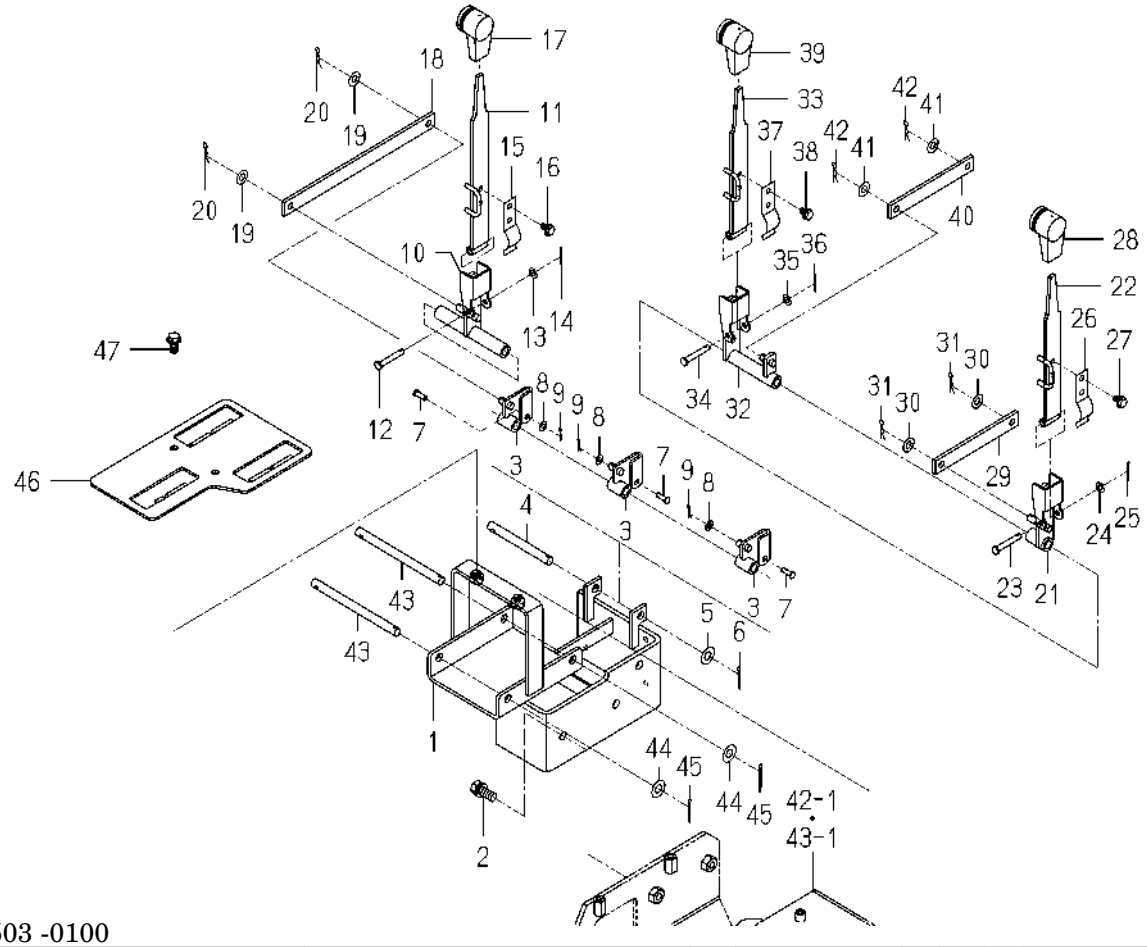

1832-503 -0100

KEY	PART CODE	DESCRIPTION	SPC	TYPE OF MODEL SF224F	TYPE OF MODEL SF235F	ITC	COL	GRP	REMARKS
1	1832-503-250-00	BRACKET/VALVE COMP	*	1	1				
2	V211-261-002-50	BOLT,S/M10X25	*	2	2				
3	1832-503-210-00	ARM/SPOOL COMP	*	3	3				
4	1832-503-003-00	PIN/10X101	*	1	1				
5	V411-260-010-00	WASHER,PL/M10	*	1	1				
6	V500-162-502-50	PIN,SPLIT/2.5X25	*	1	1				
7	1771-503-003-00	PIN/05X17	*	3	3				
8	V411-260-005-00	WASHER,PL/M5	*	3	3				
9	V560-160-005-00	PIN/SNAP	*	3	3				
10	1832-503-220-00	ARM/LIFT/MOWER COMP	*	1	1				
11	1809-503-220-10	LEVER/LIFT COMP	*	1	1				
12	2145-586-002-00	PIN/6X42	*	1	1				
13	V411-260-006-00	WASHER,PL/M6	*	1	1				
14	V500-162-002-00	PIN,SPLIT/2X20	*	1	1				
15	1809-503-003-00	SPRING/PLATE	*	1	1				
16	V230-360-601-00	FLANGEBOLT/M6X10	*	2	2				
17	1444-307-007-00	GRIP	*	1	1				
18	1832-503-001-00	PLATE/I/19X254	*	1	1				
19	V411-260-008-00	WASHER,PL/M8	*	2	2				
20	V560-160-008-00	PIN/SNAP	*	2	2				
21	1832-503-230-00	ARM/LIFT/COLLECTOR	*	1	1				
22	1832-503-270-10	LEVER/COLLECTOR COMP	*	1	1				
23	2145-586-002-00	PIN/6X42	*	1	1				
24	V411-260-006-00	WASHER,PL/M6	*	1	1				
25	V500-162-002-00	PIN,SPLIT/2X20	*	1	1				
26	1809-503-003-00	SPRING/PLATE	*	1	1				
27	V230-360-601-00	FLANGEBOLT/M6X10	*	2	2				
28	1444-307-007-00	GRIP	*	1	1				
29	1832-503-002-00	PLATE/I/19X140	*	1	1				
30	V411-260-008-00	WASHER,PL/M8	*	2	2				

FIG. 52 CONTROL SYSTEM

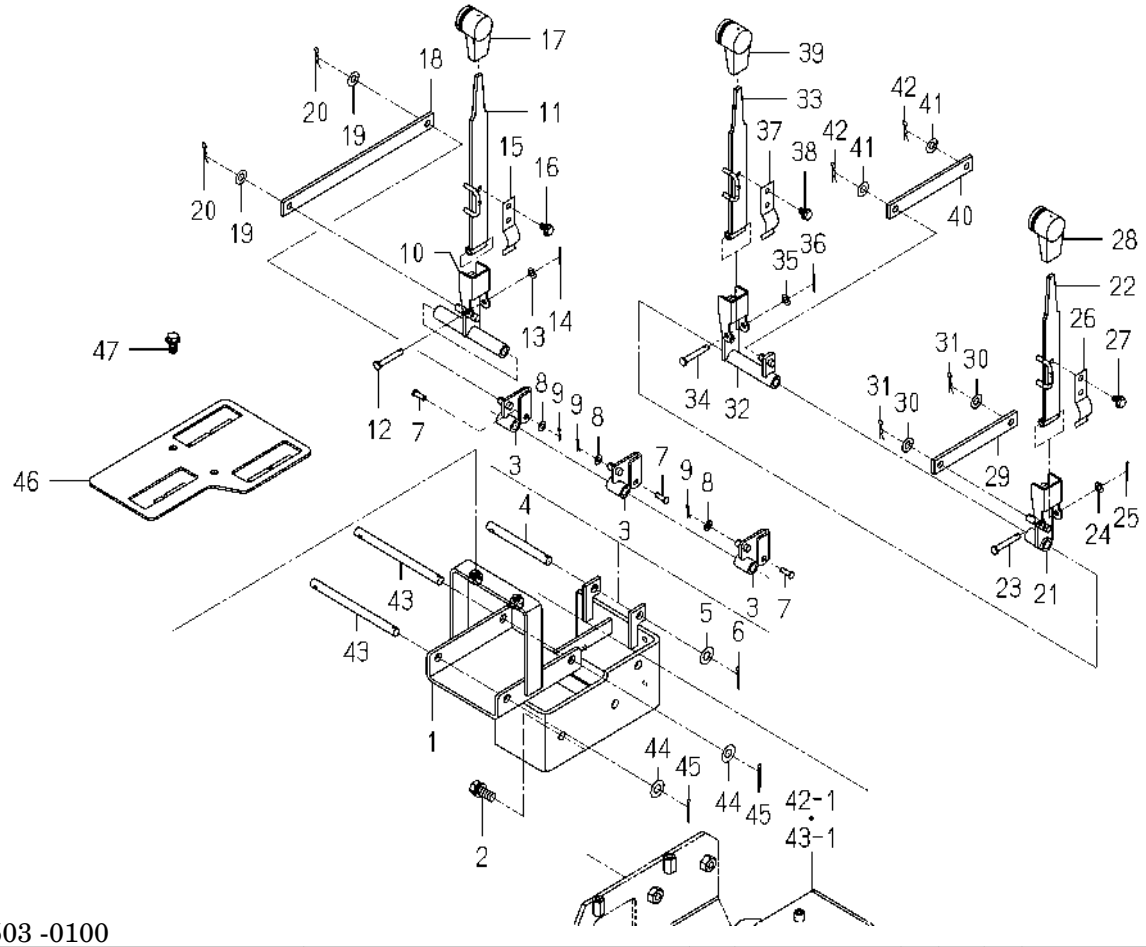

1832-503 -0100

KEY	PART CODE	DESCRIPTION	SPC	TYPE OF MODEL SF224F	TYPE OF MODEL SF235F	ITC	COL	GRP	REMARKS
31	V560-160-008-00	PIN/SNAP	*	2	2				
32	1832-503-240-00	ARM/DUMP/COLLECTOR	*	1	1				
33	1832-503-270-10	LEVER/COLLECTOR COMP	*	1	1				
34	2145-586-002-00	PIN/6X42	*	1	1				
35	V411-260-006-00	WASHER,PL/M6	*	1	1				
36	V500-162-002-00	PIN,SPLIT/2X20	*	1	1				
37	1809-503-003-00	SPRING/PLATE	*	1	1				
38	V230-360-601-00	FLANGEBOLT/M6X10	*	2	2				
39	1444-307-007-00	GRIP	*	1	1				
40	1832-503-002-00	PLATE/I/19X140	*	1	1				
41	V411-260-008-00	WASHER,PL/M8	*	2	2				
42	V560-160-008-00	PIN/SNAP	*	2	2				
43	1832-503-004-00	PIN/10X141	*	2	2				
44	V411-260-010-00	WASHER,PL/M10	*	2	2				
45	V500-162-502-50	PIN,SPLIT/2.5X25	*	2	2				
46	1832-503-280-00	GUIDE/LEVER COMP	*	1	1				
47	V231-360-801-60	FLANGEBOLT/M8X16	*	2	2				

FIG. 53 CYLINDER(LIFT)SYSTEM

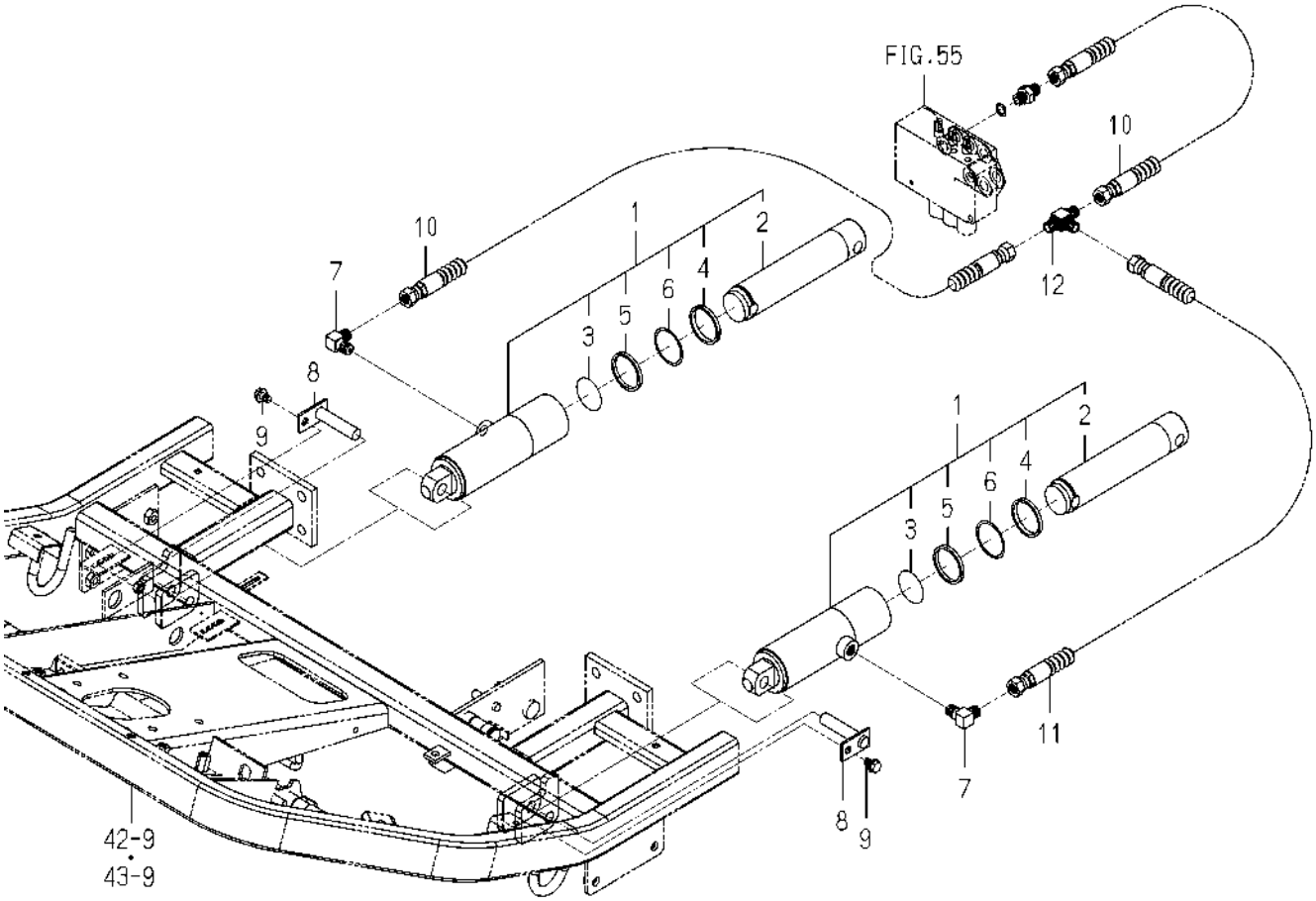

1832-504 -0100

KEY	PART CODE	DESCRIPTION	SPC	TYPE OF MODEL SF224F	TYPE OF MODEL SF235F	ITC	COL	GRP	REMARKS
1	K182-013-000-30	CYLINDER/013 ASSY	*	2	2				
2	K182-012-001-10	PISTON/012	*	2	2				
3	K182-007-002-00	PISTON STOPPER	*	2	2				
4	V793-142-480-60	DUST SEAL SER42	*	2	2				
5	V724-124-304-20	PACKING PS-42	*	2	2				
6	V730-104-804-20	RING/BACK UP	*	2	2				
7	3768-185-022-10	ADAPTER/90DEG/PUMP	*	2	2				
8	1809-553-280-00	PIN/14X63 COMP	*	2	2				
9	V211-560-801-60	BOLT,S/M8X16/7T	*	2	2				
10	1832-504-210-00	HOSE/HYDRO/750 ASSY	*	2	2				
11	1832-508-220-00	HOSE/HYDRO/1200 ASSY	*	1	1				
12	8664-555-003-00	ADAPTER/T	*	1	1				

FIG. 54 PIPING(PUMP)SYSTEM

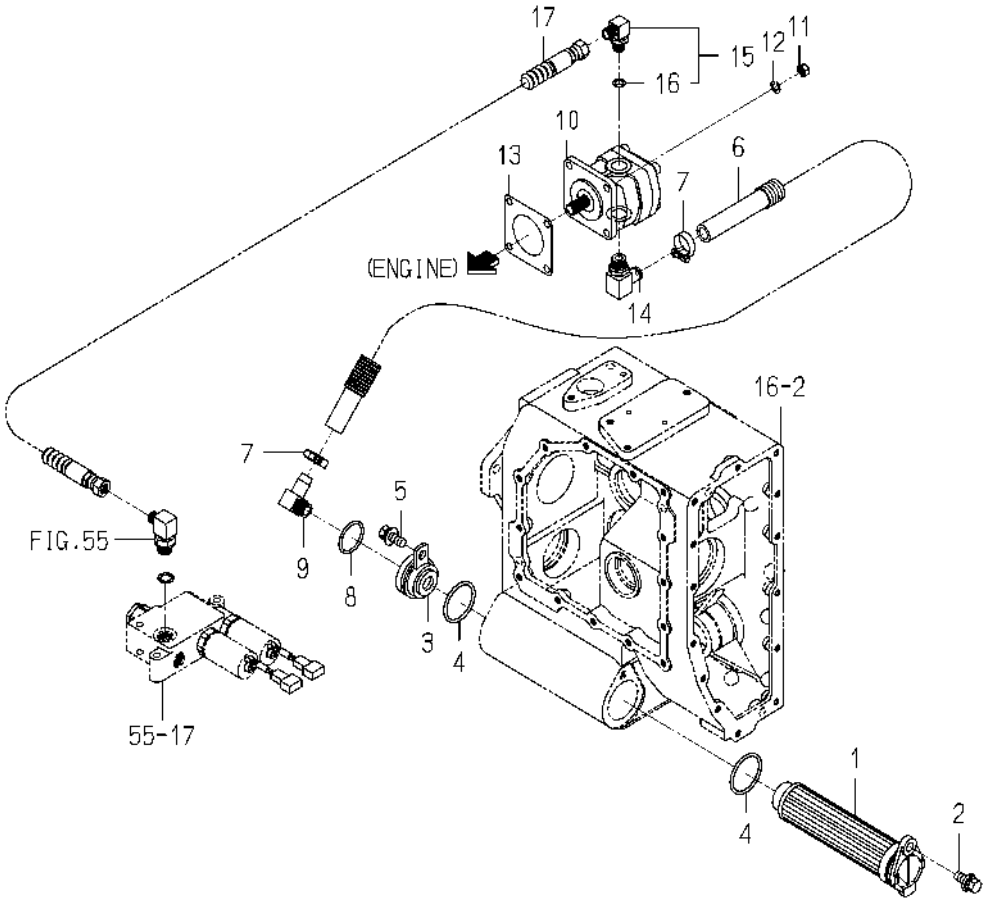

1832-508 -0100

KEY	PART CODE	DESCRIPTION	SPC	TYPE OF MODEL SF224F	TYPE OF MODEL SF235F	ITC	COL	GRP	REMARKS
1	1805-508-260-00	FILTER/SUCTION/400	*	1	1				
2	V211-361-002-50	BOLT,SP/M10X25	*	1	1				
3	1832-508-210-00	CONNECTOR/SUCTION	*	1	1				
4	V721-103-104-50	O-RING/1A,G45	*	2	2				
5	V211-361-002-50	BOLT,SP/M10X25	*	1	1				
6	1752-508-005-00	HOSE/DRAIN/MOTER	*	1	1				
7	J061-116-025-00	CLAMP/WORM/16-25	*	2	2				
8	V721-103-103-50	O-RING/1A,G35	*	1	1				
9	3626-370-005-00	ADAPTER/90DEG/3/8	*	1	1				
10	3864-351-200-00	PUNP/GEAR/5.2/L ASSY	*	1	1				
11	V304-260-008-00	NUT/M8	*	4	4				
12	V401-160-008-00	WASHER,SP/M8	*	4	4				
13	1404-503-006-00	PACKING,OIL PUMP	*	1	1				
14	3814-354-015-10	ADAPTOR(G3/8) ASSY	*	1	1				
15	1705-408-230-00	ADAPTER/L/G1/4 ASSY	*	1	1				
16	V720-112-401-10	O-RING/1B,P11	*	1	1				
17	1832-508-220-00	HOSE/HYDRO/1200 ASSY	*	1	1				

FIG. 55 PIPING(CONTROL)SYSTEM(1/2)

17~30-PLEASE SEE 2/2 PAGE

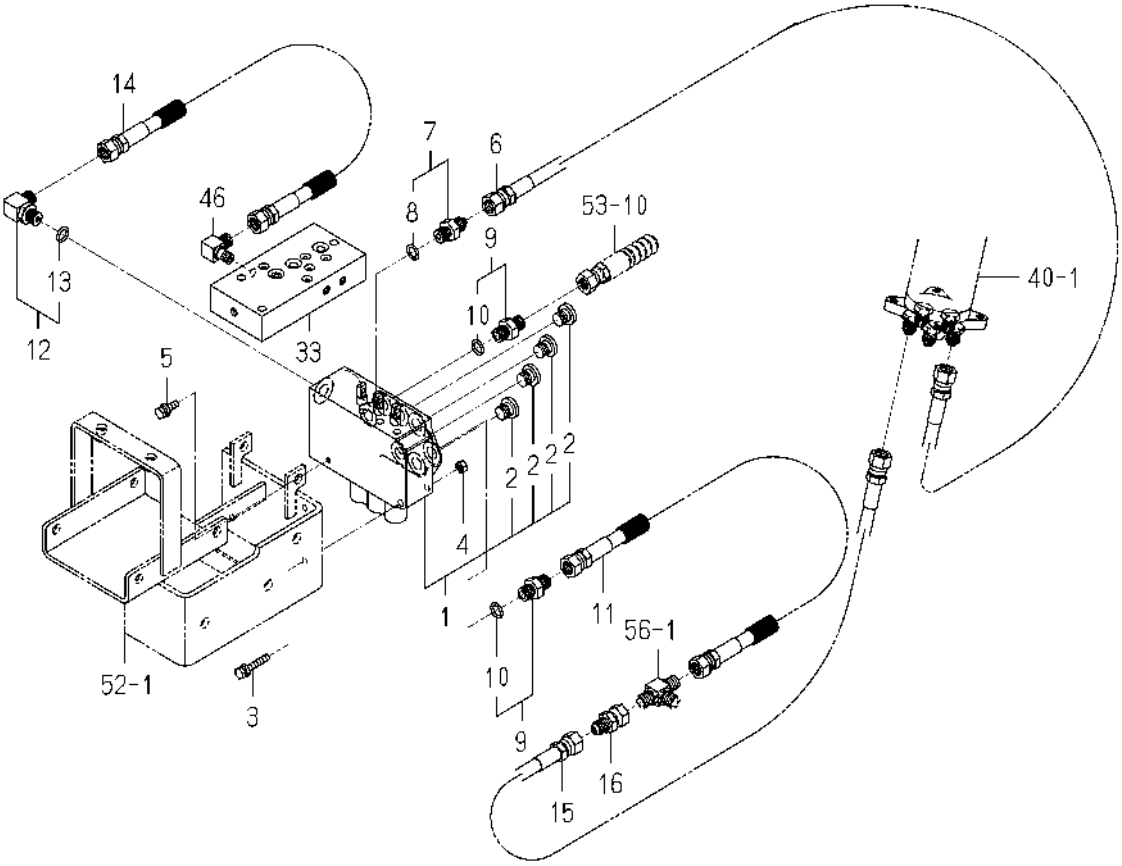

1832-509 -0100

KEY	PART CODE	DESCRIPTION	SPC	TYPE OF MODEL SF224F	TYPE OF MODEL SF235F	ITC	COL	GRP	REMARKS
1	1728-508-280-10	VALVE/1S-2D ASSY	*	1	1				
2	K275-001-003-00	PLUG(PF1/4)	*	4	4				
3	V210-360-603-50	BOLT,SP/M6X35	*	2	2				
4	V301-260-006-00	NUT/M6	*	2	2				
5	V210-360-602-00	BOLT,SP/M6X20	*	1	1				
6	1832-509-280-00	HOSE/HYDRO/1800 ASSY	*	1	1				
7	1725-509-260-00	ADAPTER/G1/4 ASSY	*	1	1				
8	V720-112-401-10	O-RING/1B,P11	*	1	1				
9	3829-387-410-00	ADPTER/G1/4.1/4	*	2	2				
10	V720-112-401-10	O-RING/1B,P11	*	2	2				
11	1832-509-330-00	HOSE/HYDRO/600 ASSY	*	1	1				
12	1705-408-230-00	ADAPTER/L/G1/4 ASSY	*	1	1				
13	V720-112-401-10	O-RING/1B,P11	*	1	1				
14	1832-509-320-00	HOSE/HYDRO/1000 ASSY	*	1	1				
15	1832-509-290-00	HOSE/HYDRO/1550 ASSY	*	1	1				
16	1832-509-003-00	ADAPTER/G1/4	*	1	1				
17	K200-282-000-00	VALVE/282 ASSY	*	1	1				
18	K200-152-110-20	VALVE/REDUCE/21 SET	*	1	1				
19	V720-112-402-20	O-RING/1B,P22	*	1	1				
20	V720-112-401-60	O-RING/1B,P16	*	3	3				
21	K290-003-000-30	VALVE/PRV/B ASSY	*	2	2				
22	V720-112-402-00	O-RING/1B,P20	*	2	2				
23	K290-001-001-00	O-RING/AS568/013	*	2	2				
24	K290-001-002-00	O-RING/AS568/014	*	2	2				
25	K290-001-003-00	O-RING/AS568/015	*	2	2				
26	V780-140-000-1T	PLUG/SCREW/SEAL	*	1	1				
27	1832-509-270-00	RELIEFVALVE/090 ASSY	*	1	1				
28	K250-090-002-00	SPRING/HC045	*	1	1				
29	K250-090-003-00	POPPET/1.3	*	1	1				
30	1832-509-230-00	ADAPTER/G1/4XG3/8	*	1	1				

FIG. 55 PIPING(CONTROL)SYSTEM(2/2)

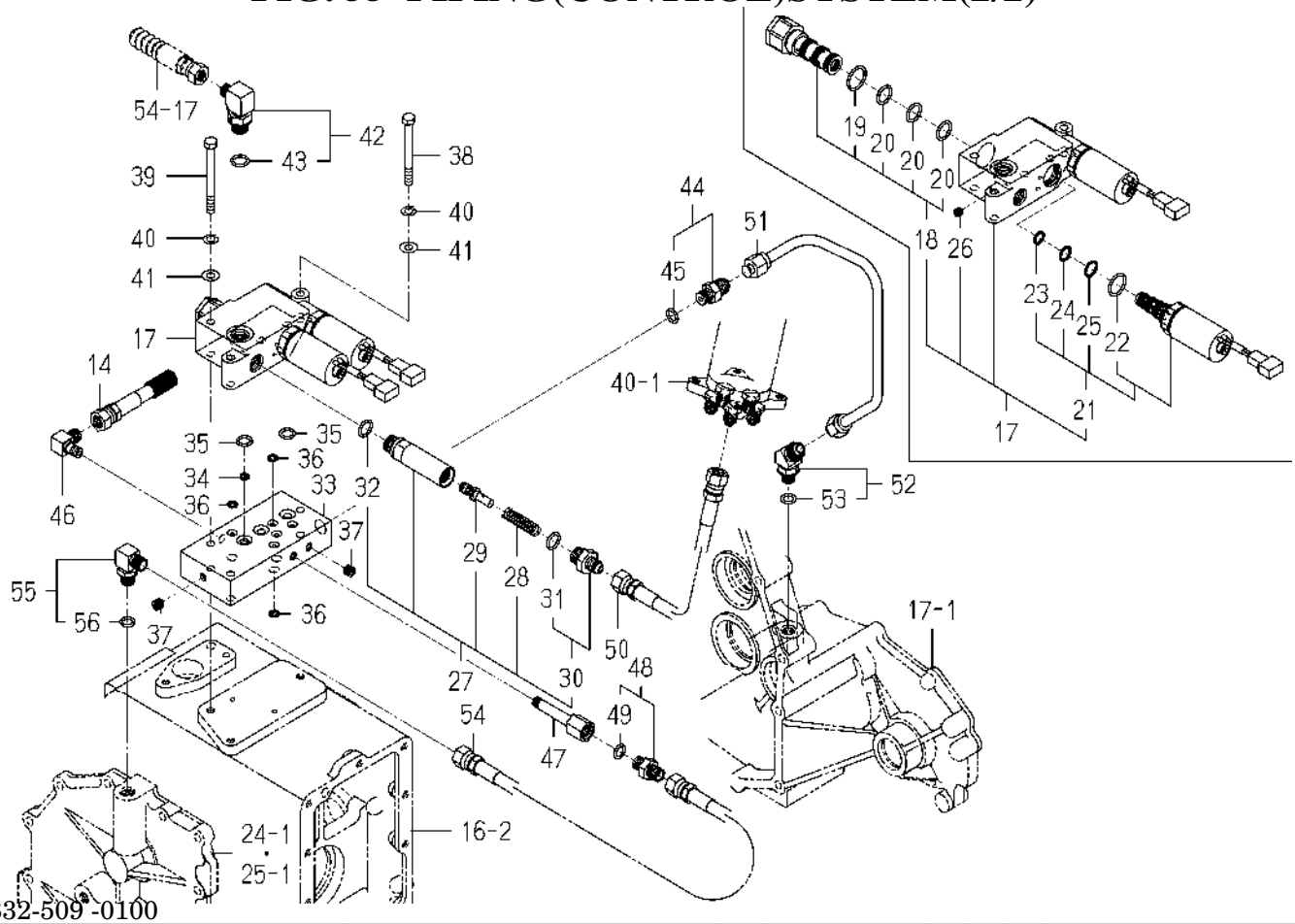

1832-509 -0100

KEY	PART CODE	DESCRIPTION	SPC	TYPE OF MODEL SF224F	TYPE OF MODEL SF235F	ITC	COL	GRP	REMARKS
31	V720-112-401-40	O-RING/1B,P14	*	1	1				
32	V720-112-401-40	O-RING/1B,P14	*	1	1				
33	1832-509-002-00	BODY/VALVE/PTO	*	1	1				
34	1729-509-001-00	FILTER/PORT/09	*	1	1				
35	V720-112-401-20	O-RING/1B,P12	*	3	3				
36	V720-111-900-70	O-RING/1B,P7	*	8	8				
37	V780-140-000-20	PLUG/SCREW	*	2	2				
38	V201-260-807-50	BOLT/M8X75	*	2	2				
39	V201-260-808-00	BOLT/M8X80	*	1	1				
40	V401-160-008-00	WASHER,SP/M8	*	3	3				
41	V411-260-008-00	WASHER,PL/M8	*	3	3				
42	P103-521-006-10	ELBOW/90DEG ASSY	*	1	1				
43	V720-112-401-40	O-RING/1B,P14	*	1	1				
44	1650-509-280-00	ADAPTER/PF1/4 ASSY	*	1	1				
45	V720-112-401-10	O-RING/1B,P11	*	1	1				
46	1675-506-002-00	ADAPTER/L/PT1/8	*	1	1				
47	1809-509-006-00	ADAPTER/PT1/8	*	1	1				
48	3829-387-410-00	ADPTER/G1/4.1/4	*	1	1				
49	V720-112-401-10	O-RING/1B,P11	*	1	1				
50	1832-509-310-00	HOSE/HYDRO/1700 ASSY	*	1	1				
51	1832-509-240-00	PIPE/PTO/MOWER COMP	*	1	1				
52	1740-407-530-00	ADAPTER/G1/4-M1 ASSY	*	1	1				
53	V720-112-401-10	O-RING/1B,P11	*	1	1				
54	1809-509-450-00	HOSE/FV-M ASSY	*	1	1				
55	1705-408-230-00	ADAPTER/L/G1/4 ASSY	*	1	1				
56	V720-112-401-10	O-RING/1B,P11	*	1	1				

FIG. 56 PIPING(HST)SYSTEM

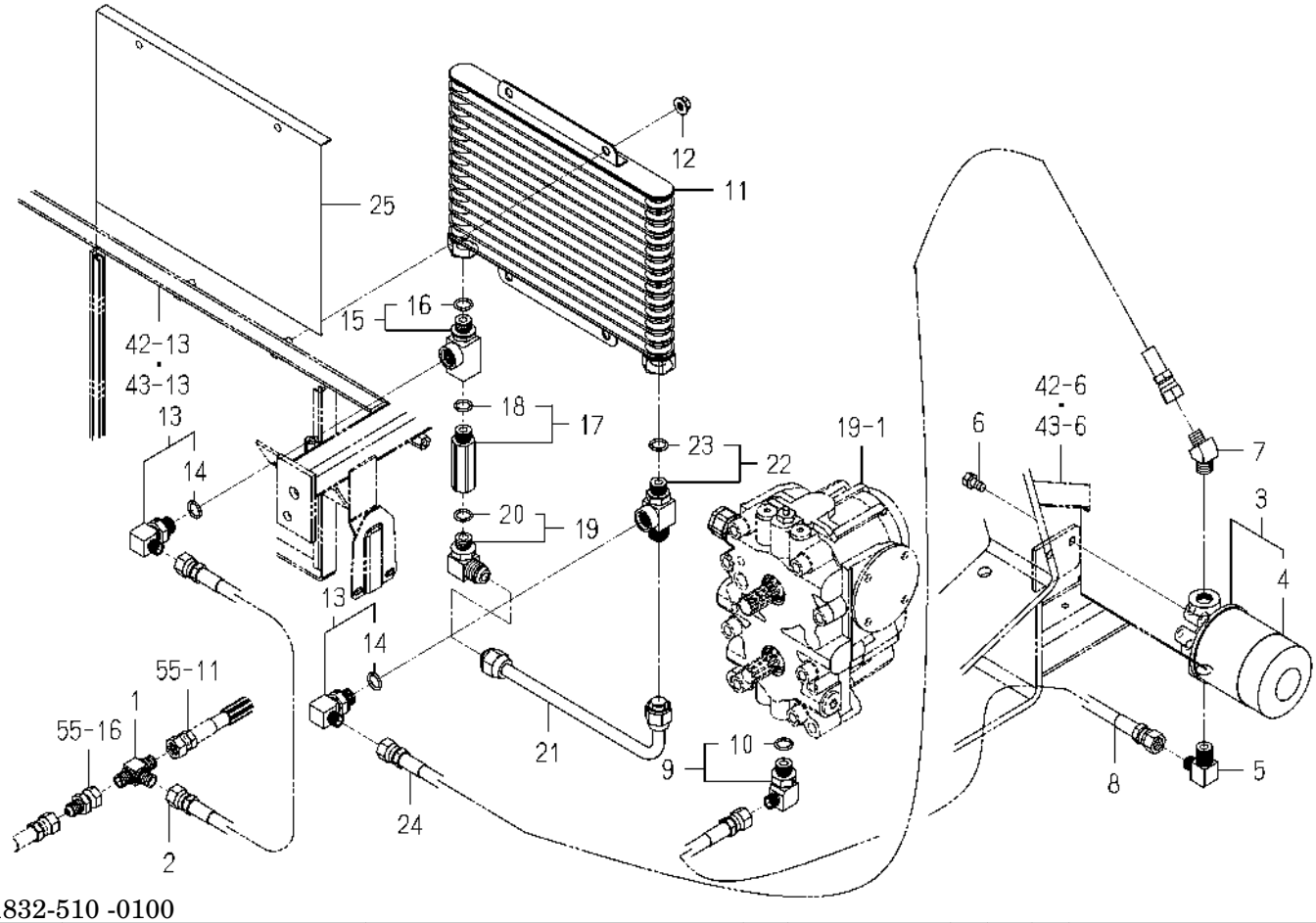

1832-510 -0100

KEY	PART CODE	DESCRIPTION	SPC	TYPE OF MODEL SF224F	TYPE OF MODEL SF235F	ITC	COL	GRP	REMARKS
1	8664-555-003-00	ADAPTER/T	*	1	1				
2	1832-509-330-00	HOSE/HYDRO/600 ASSY	*	1	1				
3	1771-510-250-00	FILTER/OIL ASSY	*	1	1				
4	1771-510-251-00	FILTER/OIL ASSY	*	1	1				
5	3814-371-004-00	ADAPTER(3/8X1/4)	*	1	1				
6	V211-260-801-60	BOLT,S/M8X16	*	2	2				
7	1754-407-001-00	ADAPTER/R3/8-G1/4	*	1	1				
8	1832-509-330-00	HOSE/HYDRO/600 ASSY	*	1	1				
9	P103-521-006-10	ELBOW/90DEG ASSY	*	1	1				
10	V720-112-401-40	O-RING/1B,P14	*	1	1				
11	1801-509-530-00	COOLER/OIL ASSY	*	1	1				
12	V362-260-008-00	NUT/WASHER/M8	*	2	2				
13	P103-521-006-10	ELBOW/90DEG ASSY	*	2	2				
14	V720-112-401-40	O-RING/1B,P14	*	2	2				
15	1740-517-600-00	ADAPTER/G3/8ASSY	*	1	1				
16	V720-112-401-40	O-RING/1B,P14	*	1	1				
17	K220-002-000-00	VALVE/CHECK ASSY	*	1	1				
18	V720-112-401-40	O-RING/1B,P14	*	1	1				
19	1650-509-310-00	ADAPTER/L/PF3/8 ASSY	*	1	1				
20	V720-112-401-40	O-RING/1B,P14	*	1	1				
21	1832-510-220-00	PIPE/COOLER COMP	*	1	1				
22	1740-517-610-00	ADAPTER/G3/8ASSY	*	1	1				
23	V720-112-401-40	O-RING/1B,P14	*	1	1				
24	1739-530-270-00	HOSE ASSY	*	1	1				
25	1832-510-001-00	NET/COOLER/OIL	*	1	1				

FIG. 57 LINK(LIFT)SYSTEM

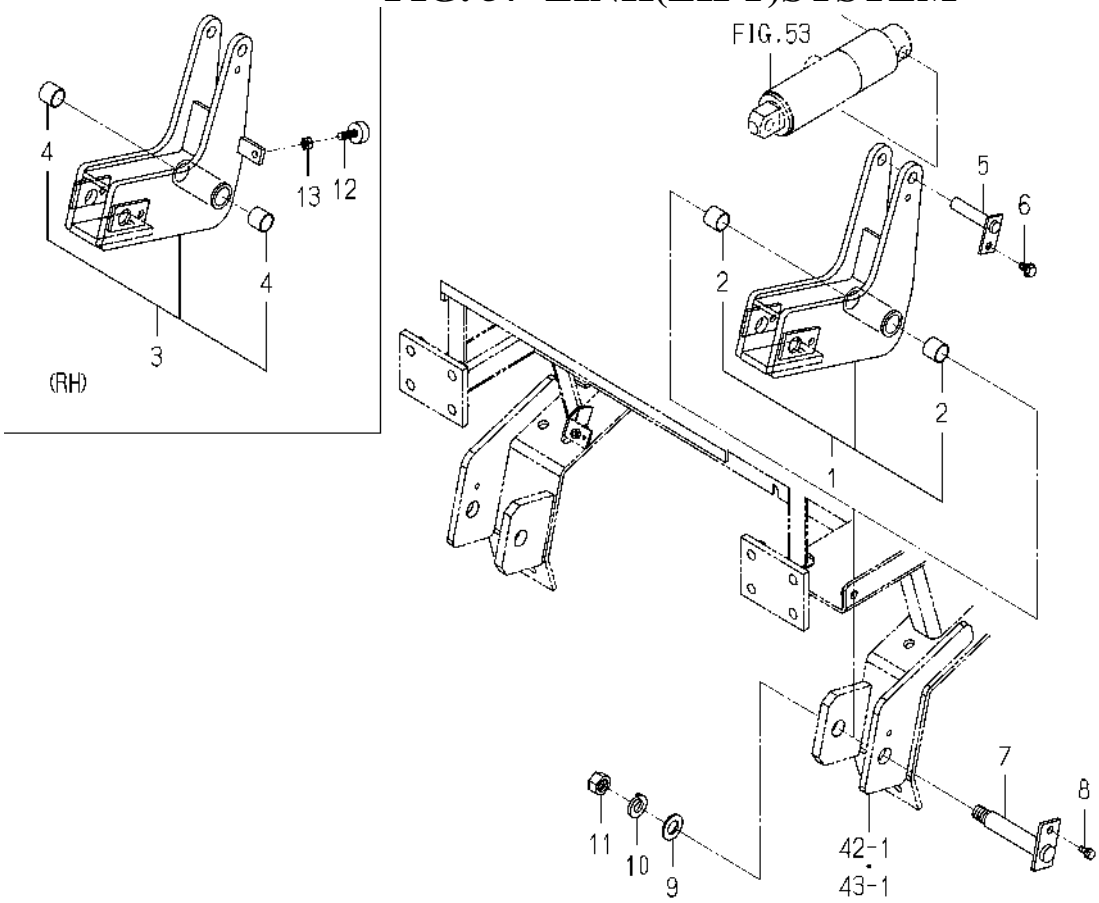

1832-553 -0100

KEY	PART CODE	DESCRIPTION	SPC	TYPE OF MODEL SF224F	TYPE OF MODEL SF235F	ITC	COL	GRP	REMARKS
1	1809-553-210-20	ARM/LIFT/LH ASSY	*	1	1				
2	8650-203-001-10	BUSH/20X23X20	*	2	2				
3	1809-553-240-20	ARM/LIFT/RH ASSY	*	1	1				
4	8650-203-001-10	BUSH/20X23X20	*	2	2				
5	1809-553-280-00	PIN/14X63 COMP	*	2	2				
6	V211-560-801-60	BOLT,S/M8X16/7T	*	2	2				
7	1809-553-230-00	PIN/M16X112 COMP	*	2	2				
8	V211-560-801-60	BOLT,S/M8X16/7T	*	2	2				
9	V411-260-016-00	WASHER,PL/M16	*	2	2				
10	V401-160-016-00	WASHER,SP/M16	*	2	2				
11	V304-260-016-00	NUT/M16	*	2	2				
12	1729-702-003-00	INSULATOR	*	1	1				
13	V304-260-008-00	NUT/M8	*	1	1				

FIG. 58 HOOD SYSTEM

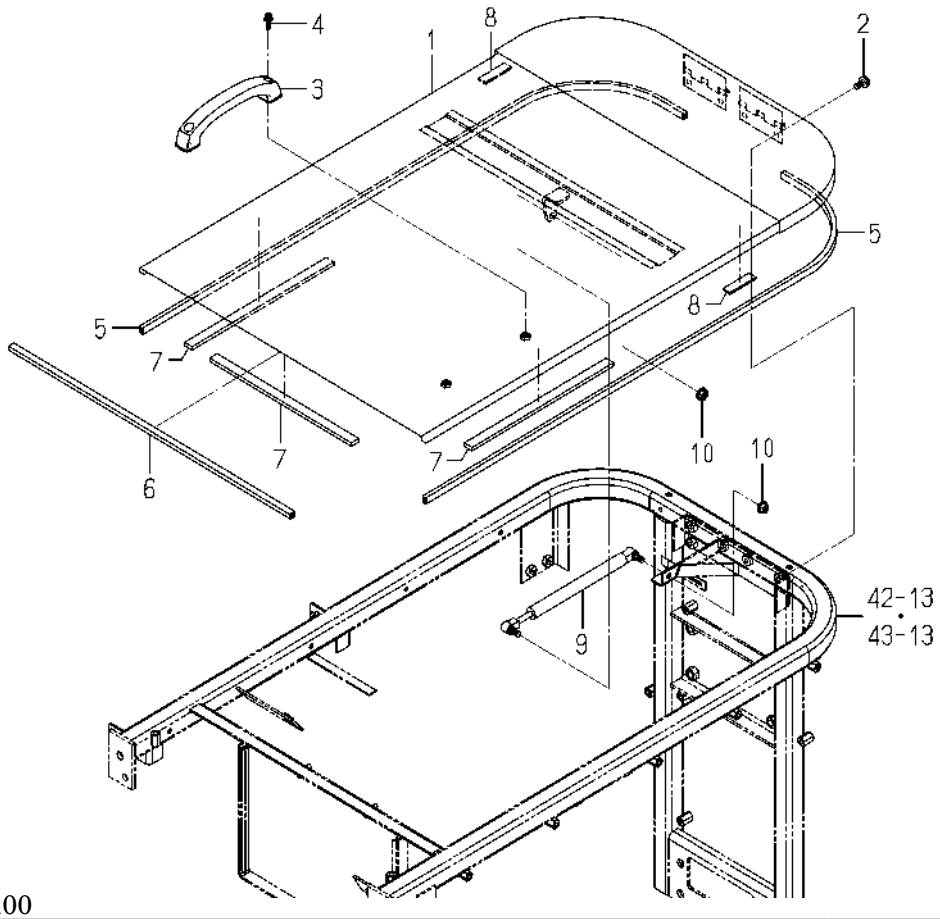

1832-601 -0100

KEY	PART CODE	DESCRIPTION	SPC	TYPE OF MODEL SF224F	TYPE OF MODEL SF235F	ITC	COL	GRP	REMARKS
1	1832-601-210-00	COVER/ENGINE COMP	*	1	1		7F		
2	V231-360-801-60	FLANGEBOLT/M8X16	*	4	4				
3	3670-236-003-00	GRIP	*	1	1				
4	V120-366-002-00	SCREW,SP/M6X20	*	2	2				
5	1832-601-001-00	INSULATOR/1100	*	2	2				
6	1832-601-002-00	INSULATOR/595	*	1	1				
7	1809-410-001-00	INSULATOR/16X300	*	3	3				
8	1752-606-004-00	INSULATOR/15X55X03	*	2	2				
9	1729-601-280-10	DUMPER/HOOD ASSY	*	1	1				
10	V362-260-008-00	NUT/WASHER/M8	*	2	2				

FIG. 59 COVER(STEERING)SYSTEM

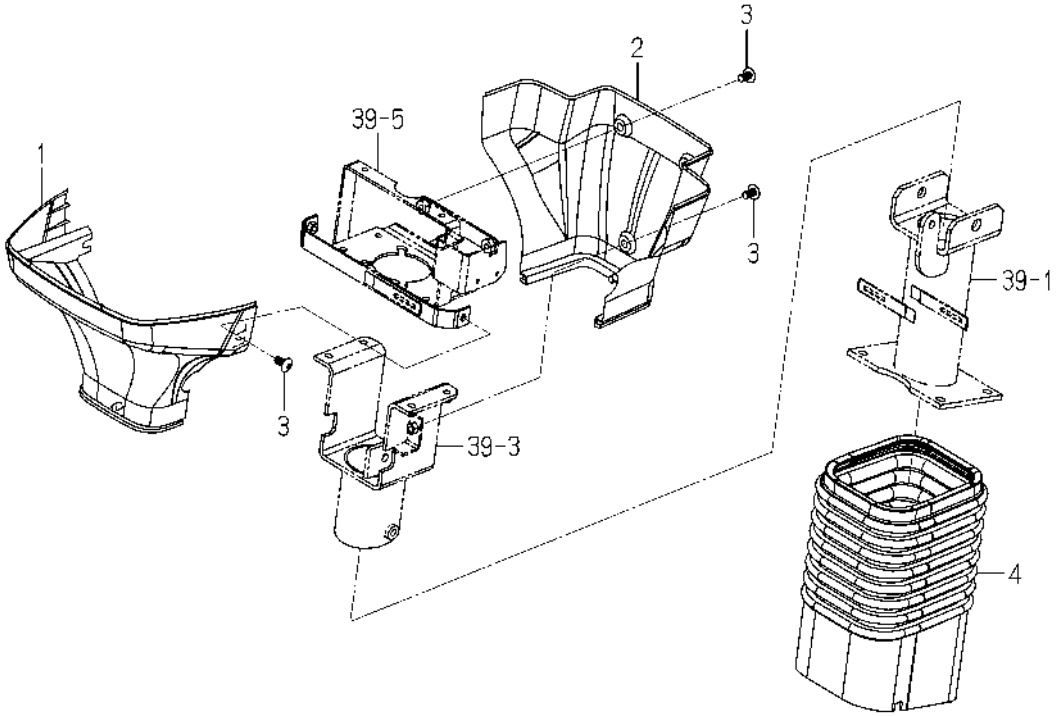

1832-603 -0100

KEY	PART CODE	DESCRIPTION	SPC	TYPE OF MODEL		ITC	COL	GRP	REMARKS
				SF224F	SF235F				
1	1809-603-001-00	COVER/COLUMN/F	*	1	1				
2	1809-603-002-00	COVER/COLUMN/R	*	1	1				
3	3824-232-021-00	SCREW/TRUSS/M08X20	*	5	5				
4	1832-603-001-00	BOOT/COVER/COLUMN	*	1	1				

FIG. 60 FENDER SYSTEM

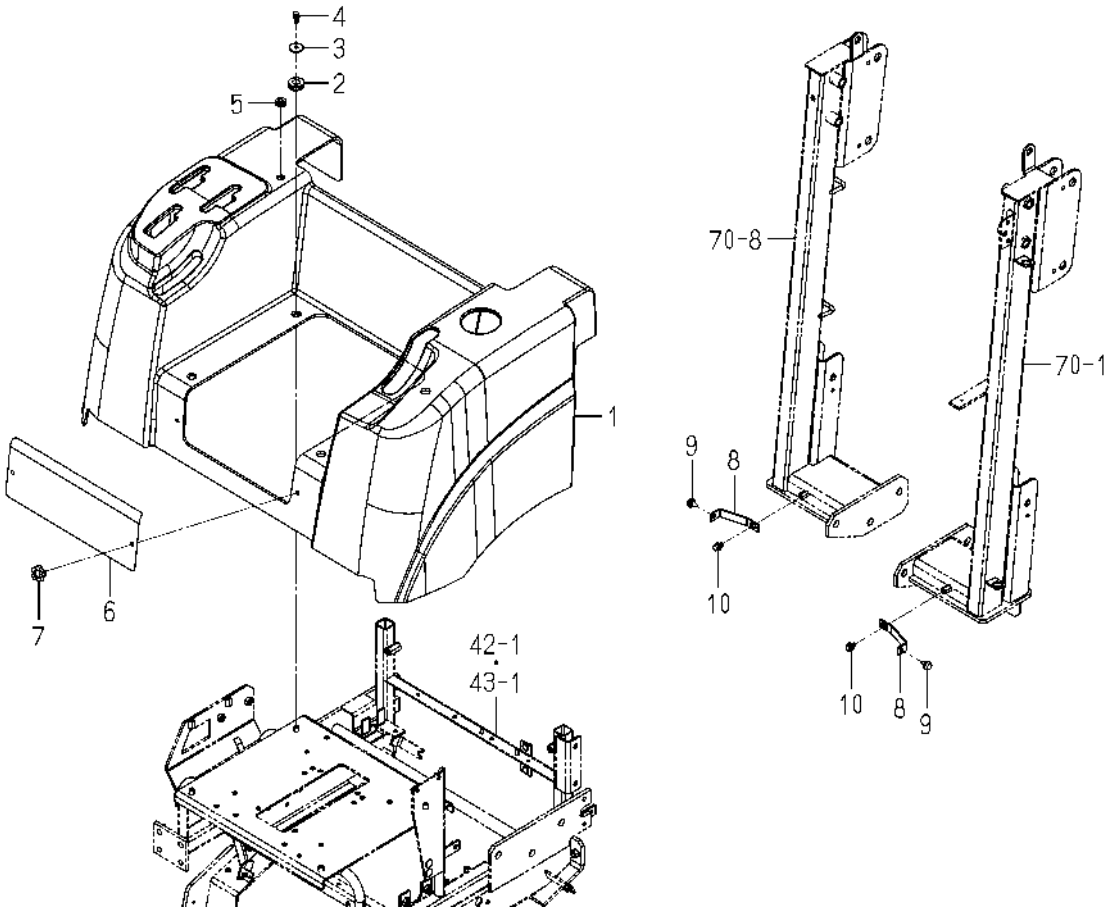

1832-606 -0100

KEY	PART CODE	DESCRIPTION	SPC	TYPE OF MODEL SF224F	TYPE OF MODEL SF235F	ITC	COL	GRP	REMARKS
1	1832-606-001-00	FENDER/SF2	*	1	1				
2	1729-741-007-00	GROMMET/17X21X05	*	4	4				
3	1376-606-005-00	WASHER/9X32X2	*	4	4				
4	V211-260-802-00	BOLT,S/M8X20	*	4	4				
5	1704-740-008-10	GROMMET/13X17X05	*	1	1				
6	1809-606-002-00	COVER/FRONT	*	1	1		4L		
7	1102-611-006-10	KNOB/SET/M06X15	*	2	2				
8	1832-606-002-00	STAY/FENDER	*	2	2				
9	1432-616-002-00	RUBBER,CUSHION	*	2	2				
10	V211-360-801-60	BOLT,SP/M8X16	*	2	2				

FIG. 61 SEAT SYSTEM(Z TYPE-STANDARD/ EXCEPT Z TYPE-OPTION)

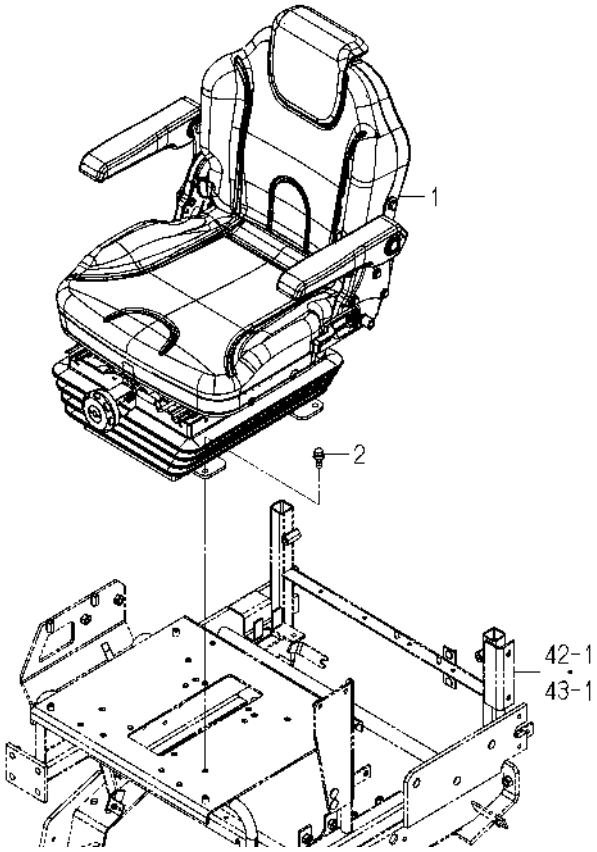

1832-611 -0100

KEY	PART CODE	DESCRIPTION	SPC	TYPE OF MODEL		ITC	COL	GRP	REMARKS
				SF224F	SF235F				
1	1832-611-210-10	SEAT ASSY	*	1	1				
2	V211-660-802-50	BOLT,SP/M8X25/7T	*	4	4				

FIG. 62 FLOOR SYSTEM

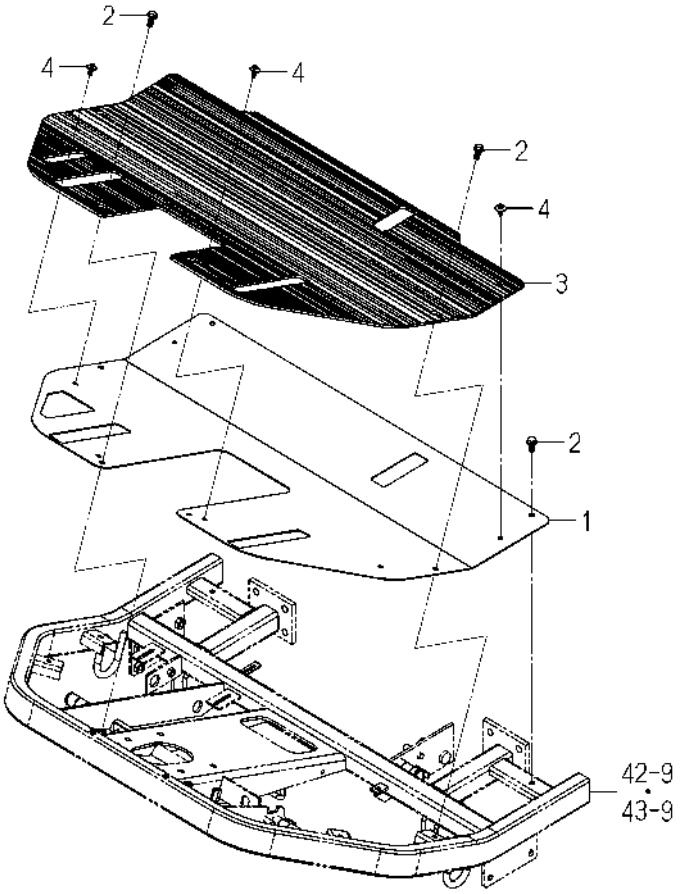

1832-630 -0100

KEY	PART CODE	DESCRIPTION	SPC	TYPE OF MODEL SF224F	TYPE OF MODEL SF235F	ITC	COL	GRP	REMARKS
1	1832-630-001-00	FLOOR	*	1	1				
2	V231-360-801-60	FLANGEBOLT/M8X16	*	6	6				
3	1832-630-002-00	MAT/STEP	*	1	1				
4	1636-611-011-00	RIVET/SCREW ASSY	*	6	6				

FIG. 63 LIGHT SYSTEM(B TYPE)

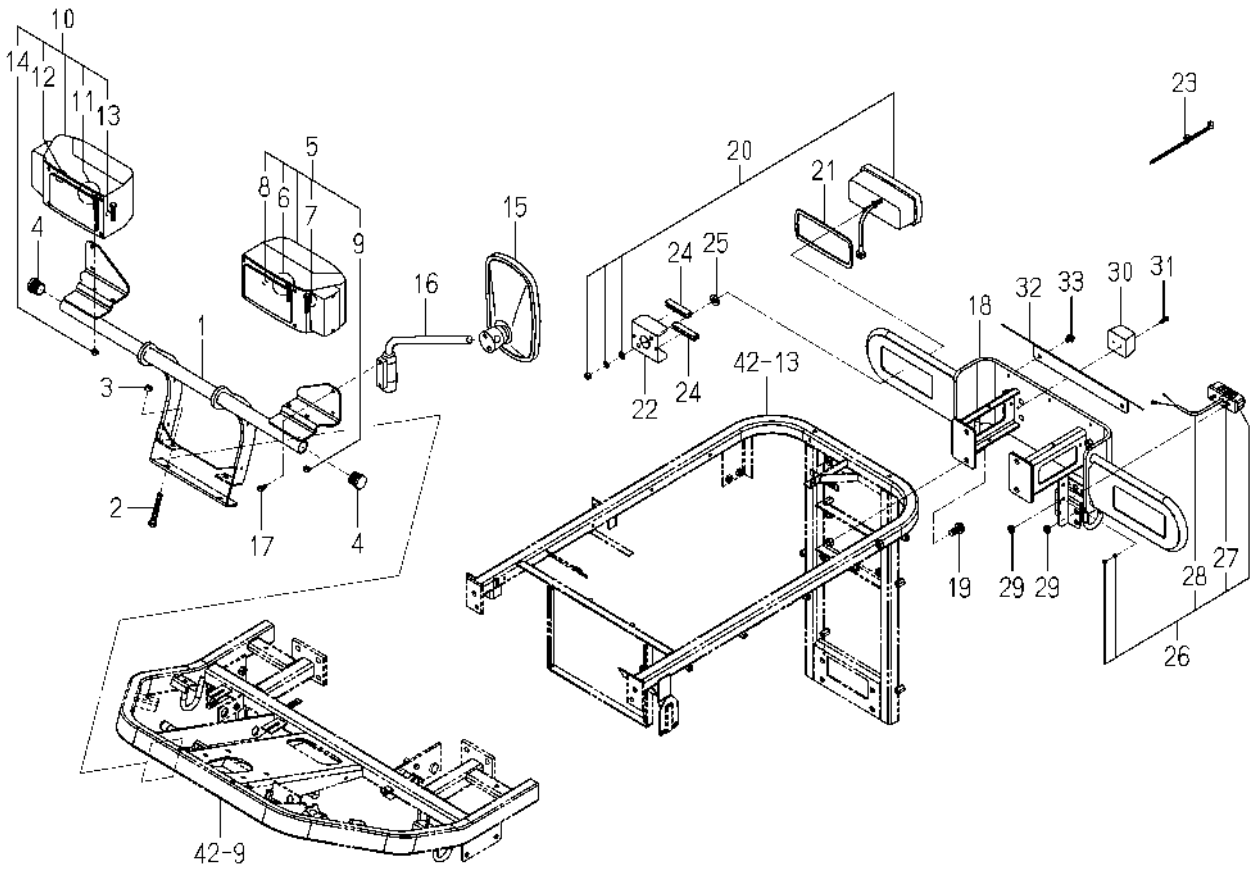

1832-650 -0100

KEY	PART CODE	DESCRIPTION	SPC	TYPE OF MODEL SF224F	TYPE OF MODEL SF235F	ITC	COL	GRP	REMARKS
1	1832-650-210-00	STAY/LAMP/FRONT COMP	*	1	1				
2	V231-361-007-00	FLANGEBOLT/M10X70	*	2	2				
3	1725-611-087-00	U-NUT/M10X1.5	*	2	2				
4	1809-650-006-00	CAP/PIPE	*	2	2				
5	1809-650-230-00	LAMP/HEAD/LH ASSY	*	1	1				
6	1774-650-212-00	BULB/H4/60/55W	*	1	1				
7	1772-654-216-00	BULB/12V21W	*	1	1				
8	1809-650-232-00	BULB/12V4W	*	1	1				
9	1809-650-233-00	UNUT(M8)	*	2	2				
10	1809-650-240-00	LAMP/HEAD/RH ASSY	*	1	1				
11	1774-650-212-00	BULB/H4/60/55W	*	1	1				
12	1772-654-216-00	BULB/12V21W	*	1	1				
13	1809-650-232-00	BULB/12V4W	*	1	1				
14	1809-650-233-00	UNUT(M8)	*	2	2				
15	1674-619-300-10	MIRROR ASSY	*	2	2				
16	1674-619-310-00	ARM/MIRROR ASSY	*	2	2				
17	V230-360-601-60	FLANGEBOLT/M6X16	*	4	4				
18	1832-650-310-00	BUMPER/REAR COMP	*	1	1				
19	V231-361-202-50	FLANGEBOLT/M12X25	*	4	4				
20	1772-654-210-00	LAMP/COMBINATION/REA	*	2	2				FIG 086
21	1772-654-001-00	INSULATOR/LAMP	*	2	2				
22	1772-654-002-10	PLATE/U/70X85	*	2	2				
23	1560-666-004-00	BAND	*	2	2				
24	P113-201-007-00	TRIM/70	*	4	4				
25	V411-260-012-00	WASHER,PL/M12	*	4	4				
26	1674-654-270-00	LAMP/NUMBERPLAT SET	*	1	1				
27	1674-654-271-00	BULB/12V/5W	*	1	1				
28	1674-654-272-00	HARNESS/LAMP	*	1	1				
29	4335-512-004-00	GROMMET/9	*	2	2				
30	1809-650-012-00	STOPPER/B	*	2	2				

FIG. 63 LIGHT SYSTEM(B TYPE)

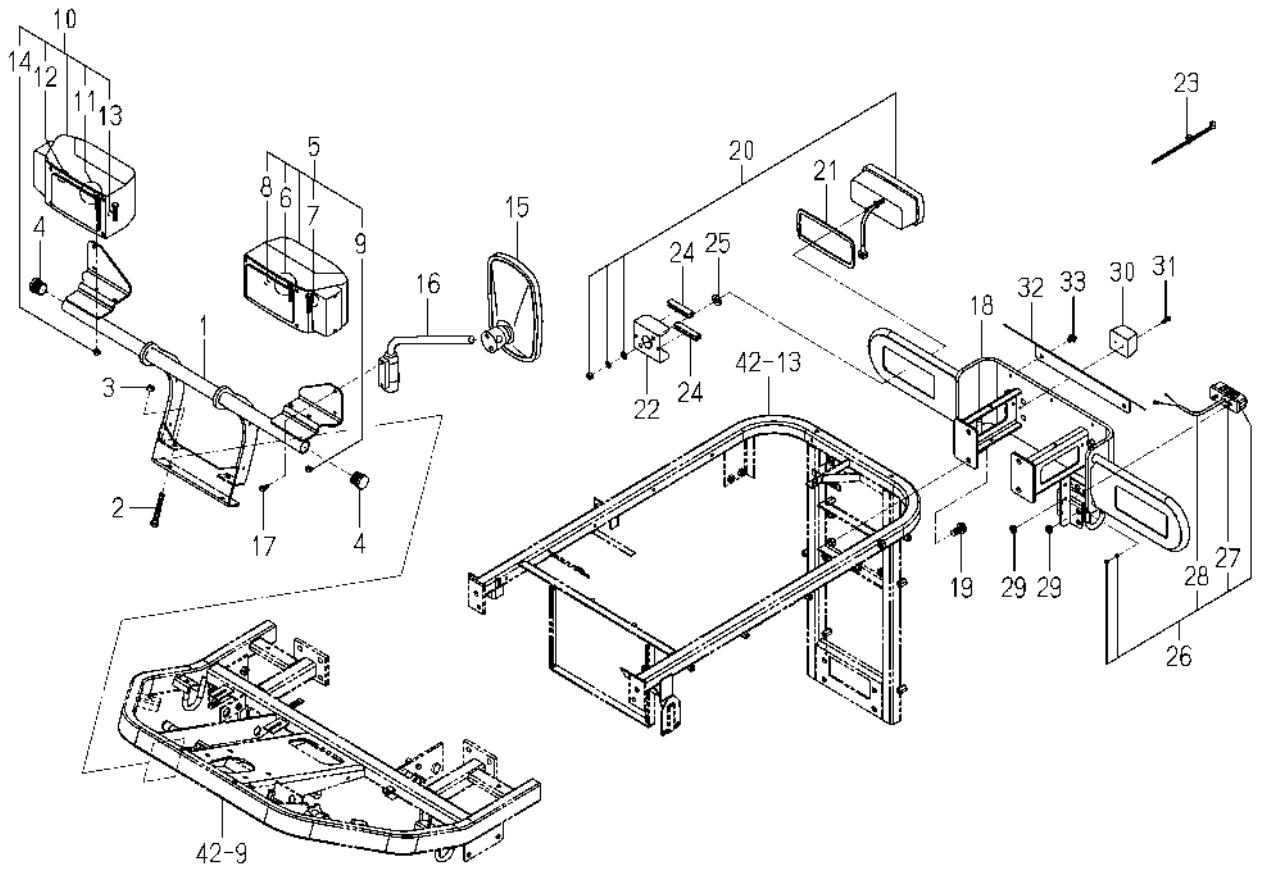

1832-650 -0100

KEY	PART CODE	DESCRIPTION	SPC	TYPE OF MODEL SF224F	TYPE OF MODEL SF235F	ITC	COL	GRP	REMARKS
31	V111-176-002-00	SCREW/M6X20	*	4	4				
32	1832-650-001-00	COVER/REARLIGHT	*	1	1		7F		
33	V231-360-801-20	FLANGEBOLT/M8X12	*	2	2				

FIG. 64 LIGHT SYSTEM(EXCEPT B TYPE)

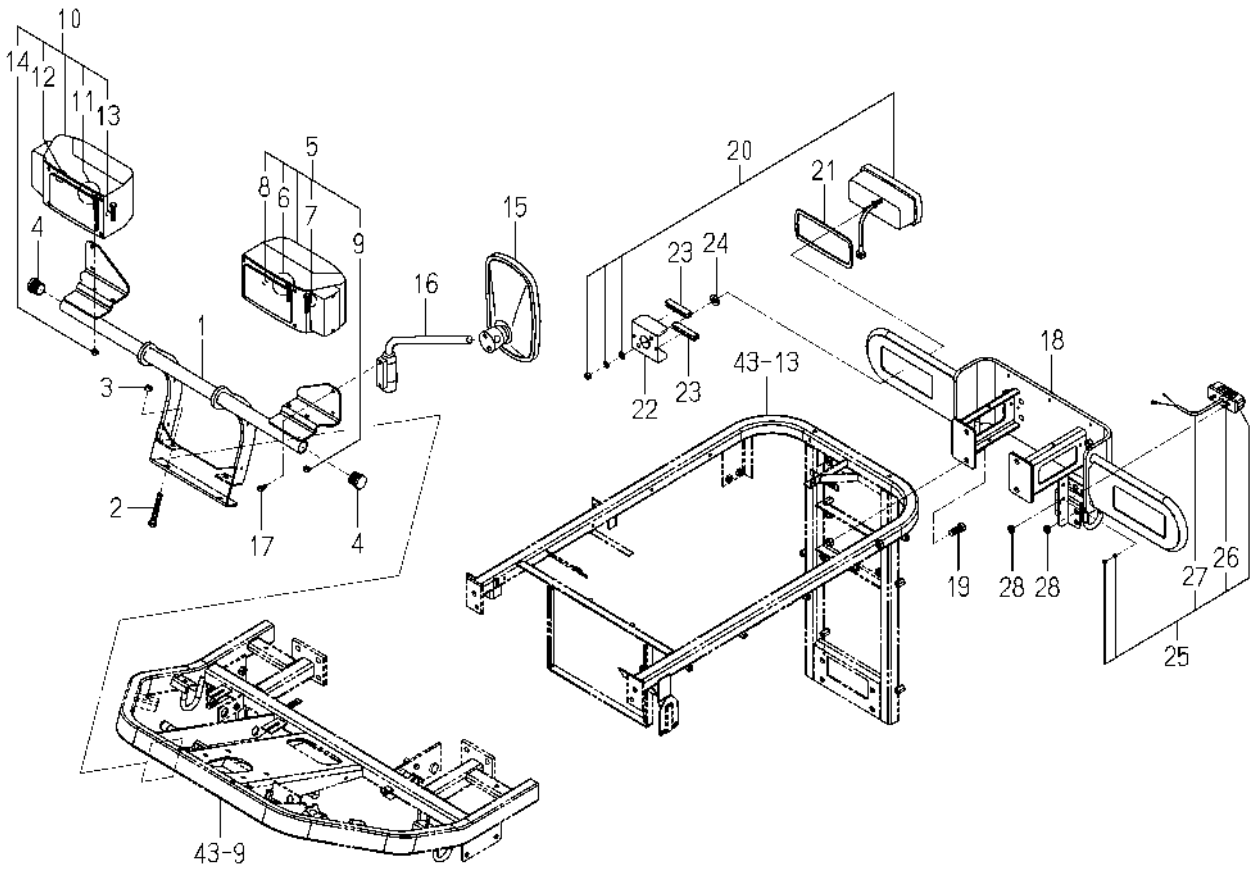

1832-650B-0100

KEY	PART CODE	DESCRIPTION	SPC	TYPE OF MODEL SF224F	TYPE OF MODEL SF235F	ITC	COL	GRP	REMARKS
1	1832-650-210-00	STAY/LAMP/FRONT COMP	*	1	1				
2	V231-361-007-00	FLANGEBOLT/M10X70	*	2	2				
3	1725-611-087-00	U-NUT/M10X1.5	*	2	2				
4	1809-650-006-00	CAP/PIPE	*	2	2				
5	1809-650-230-00	LAMP/HEAD/LH ASSY	*	1	1				
6	1774-650-212-00	BULB/H4/60/55W	*	1	1				
7	1772-654-216-00	BULB/12V21W	*	1	1				
8	1809-650-232-00	BULB/12V4W	*	1	1				
9	1809-650-233-00	UNUT(M8)	*	2	2				
10	1809-650-240-00	LAMP/HEAD/RH ASSY	*	1	1				
11	1774-650-212-00	BULB/H4/60/55W	*	1	1				
12	1772-654-216-00	BULB/12V21W	*	1	1				
13	1809-650-232-00	BULB/12V4W	*	1	1				
14	1809-650-233-00	UNUT(M8)	*	2	2				
15	1674-619-300-10	MIRROR ASSY	*	2	2				
16	1674-619-310-00	ARM/MIRROR ASSY	*	2	2				
17	V230-360-601-60	FLANGEBOLT/M6X16	*	4	4				
18	1832-650-310-00	BUMPER/REAR COMP	*	1	1				
19	V201-361-203-00	BOLT/M12X30/7T	*	4	4				
20	1772-654-210-00	LAMP/COMBINATION/REA	*	2	2				FIG 086
21	1772-654-001-00	INSULATOR/LAMP	*	2	2				
22	1772-654-002-10	PLATE/U/70X85	*	2	2				
23	P113-201-007-00	TRIM/70	*	4	4				
24	V411-260-012-00	WASHER,PL/M12	*	4	4				
25	1674-654-270-00	LAMP/NUMBERPLAT SET	*	1	1				
26	1674-654-271-00	BULB/12V/5W	*	1	1				
27	1674-654-272-00	HARNESS/LAMP	*	1	1				
28	4335-512-004-00	GROMMET/9	*	2	2				

FIG. 65 PANEL(SWITCH)SYSTEM

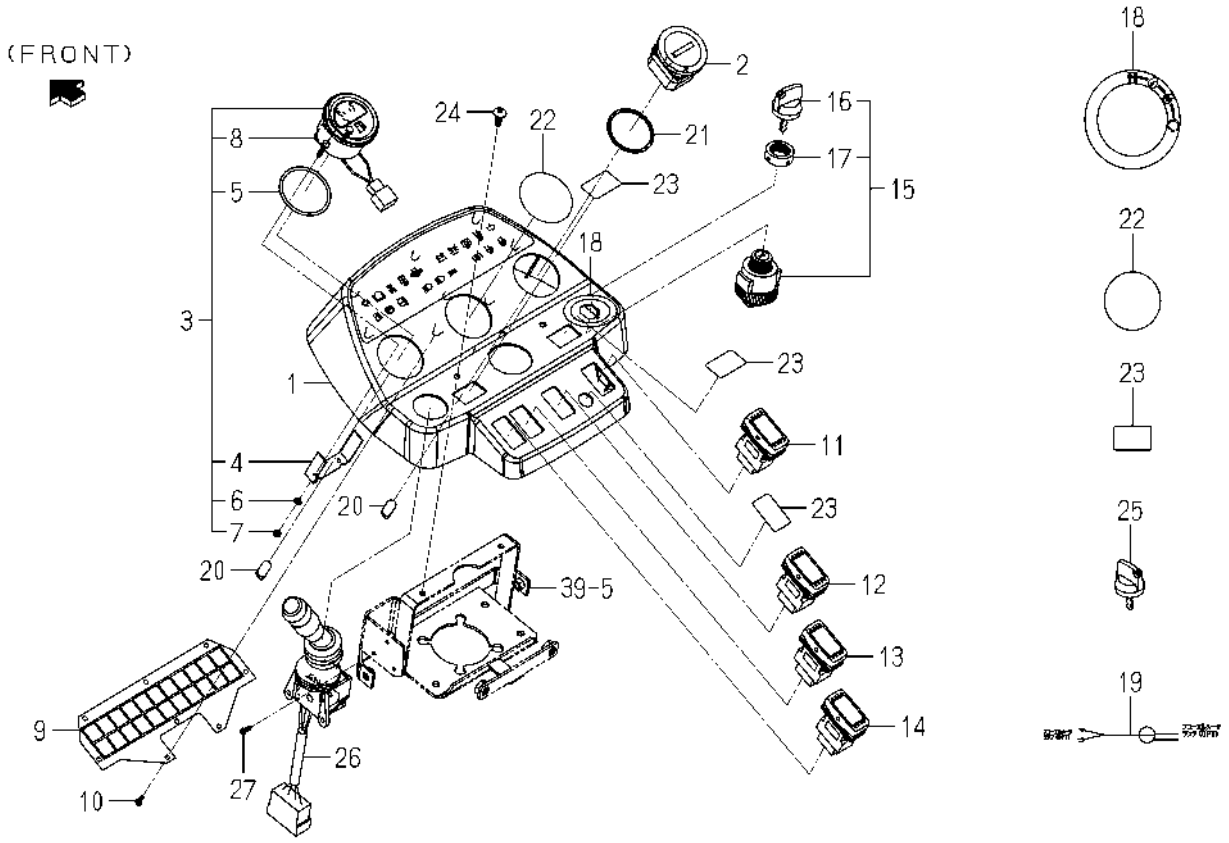

1832-670 -0100

KEY	PART CODE	DESCRIPTION	SPC	TYPE OF MODEL SF224F	TYPE OF MODEL SF235F	ITC	COL	GRP	REMARKS
1	1832-670-210-10	PANEL/SWITCH COMP	*	1	1				
2	1689-613-260-00	METER/HOUR ASSY	*	1	1				
3	1703-670-320-00	METER/FUEL ASSY	*	1	1				
4	1703-670-322-00	HOLDER	*	1	1				
5	1703-670-323-00	INSULATOR	*	1	1				
6	1703-670-324-00	WASHER	*	2	2				
7	1703-670-325-00	NUT	*	2	2				
8	1703-670-326-00	PLUG	*	1	1				
9	1809-670-220-00	LAMP/MONITOR ASSY	*	1	1				
10	V195-164-008-30	SCREW/TAPPING	*	8	8				
11	1832-670-310-00	SWITCH/PTO ASSY	*	1	1				
12	1832-670-320-00	SWITCH/PTO ASSY	*	1	1				
13	1832-670-330-00	SWITCH/BEACON ASSY	*	1	1				
14	1832-670-340-00	SWITCH/HAZARD ASSY	*	1	1				
15	3843-261-200-20	SWITCH/MAIN ASSY	*	1	1				
16	3843-261-201-00	KEY	*	1	1				
17	2186-536-212-00	NUT/RING	*	1	1				
18	1746-902-004-00	LABEL/CONTROL/START/	*	1	1				
19	1770-621-530-00	HARNESS/LAMP ASSY	*	1	1				
20	3650-270-214-00	BULB/12V3.4W	*	2	2				
21	V723-102-005-00	O-RING/1A,S50	*	1	1				
22	1832-670-201-00	LABEL/METER	*	1	1				
23	1832-670-202-00	LABEL/PANEL	*	3	3				
24	1729-705-009-00	SCREW/TRUSS/M06X16	*	2	2				
25	3843-261-201-00	KEY	*	1	1				
26	1772-652-220-10	SWITCH/COMBINATION	*	1	1				
27	1772-652-001-00	SCREW/TAPPING/3.5X13	*	3	3				

FIG. 66 SWITCH(SAFETY)SYSTEM(1/2)

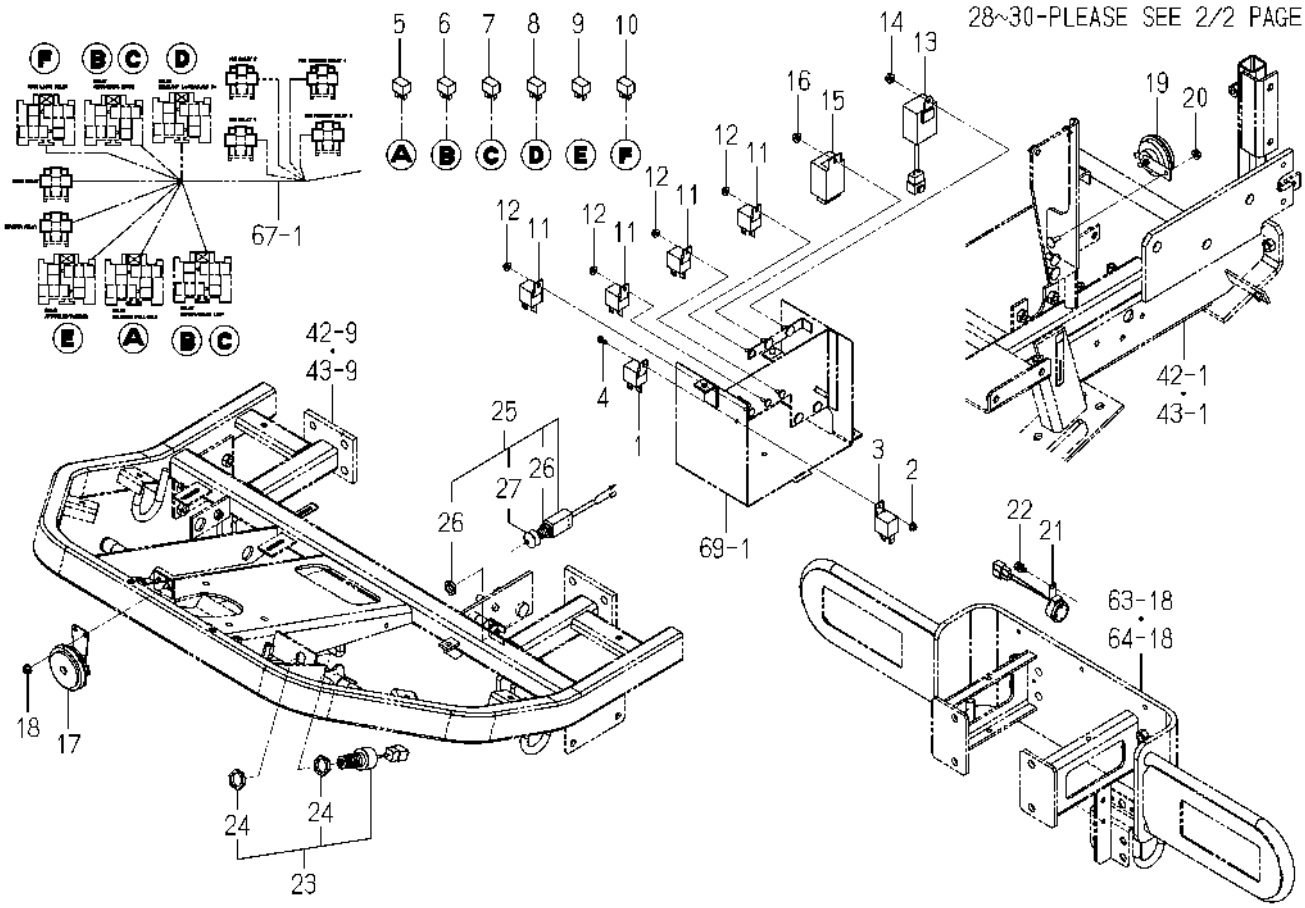

1832-680 -0100

KEY	PART CODE	DESCRIPTION	SPC	TYPE OF MODEL SF224F	TYPE OF MODEL SF235F	ITC	COL	GRP	REMARKS
1	1719-650-250-00	RELAY ASSY	*	1	1				
2	V360-260-005-00	NUT/WASHER/M5	*	1	1				
3	1719-650-250-00	RELAY ASSY	*	1	1				
4	V111-165-001-20	SCREW/M5X12	*	1	1				
5	1800-652-400-00	RELAY/5P ASSY	*	2	2				
6	1800-652-400-00	RELAY/5P ASSY	*	2	2				
7	1800-652-400-00	RELAY/5P ASSY	*	2	2				
8	1800-652-400-00	RELAY/5P ASSY	*	2	2				
9	1800-652-400-00	RELAY/5P ASSY	*	2	2				
10	1800-652-400-00	RELAY/5P ASSY	*	2	2				
11	1719-650-250-00	RELAY ASSY	*	4	4				
12	V360-260-005-00	NUT/WASHER/M5	*	4	4				
13	1774-680-250-00	UNIT/TIMER ASSY	*	1	1				
14	V360-260-006-00	NUT/WASHER/M6	*	1	1				
15	1739-681-220-20	RELAY/FLASHER/EEC	*	1	1				
16	V360-260-006-00	NUT/WASHER/M6	*	1	1				
17	1740-680-530-20	HORN ASSY	*	1	1				
18	V360-260-006-00	NUT/WASHER/M6	*	2	2				
19	1690-650-320-00	HORN ASSY	*	1	1				
20	V360-260-006-00	NUT/WASHER/M6	*	1	1				
21	2515-665-210-00	BUZZER	*	1	1				
22	V210-360-601-60	BOLT,SP/M6X16	*	1	1				
23	1772-654-250-10	SWITCH/PUSH ASSY	*	1	1				
24	1772-654-251-00	NUT	*	2	2				
25	1772-654-280-10	SWITCH/PUSH ASSY	*	1	1				
26	1772-654-281-00	NUT	*	2	2				
27	1772-654-282-00	BOOT	*	1	1				
28	1716-680-330-10	SWITCH/LEVER ASSY	*	1	1				
29	1716-680-222-00	ARM	*	1	1				
30	V210-360-601-60	BOLT,SP/M6X16	*	1	1				

FIG. 66 SWITCH(SAFETY)SYSTEM(2/2)

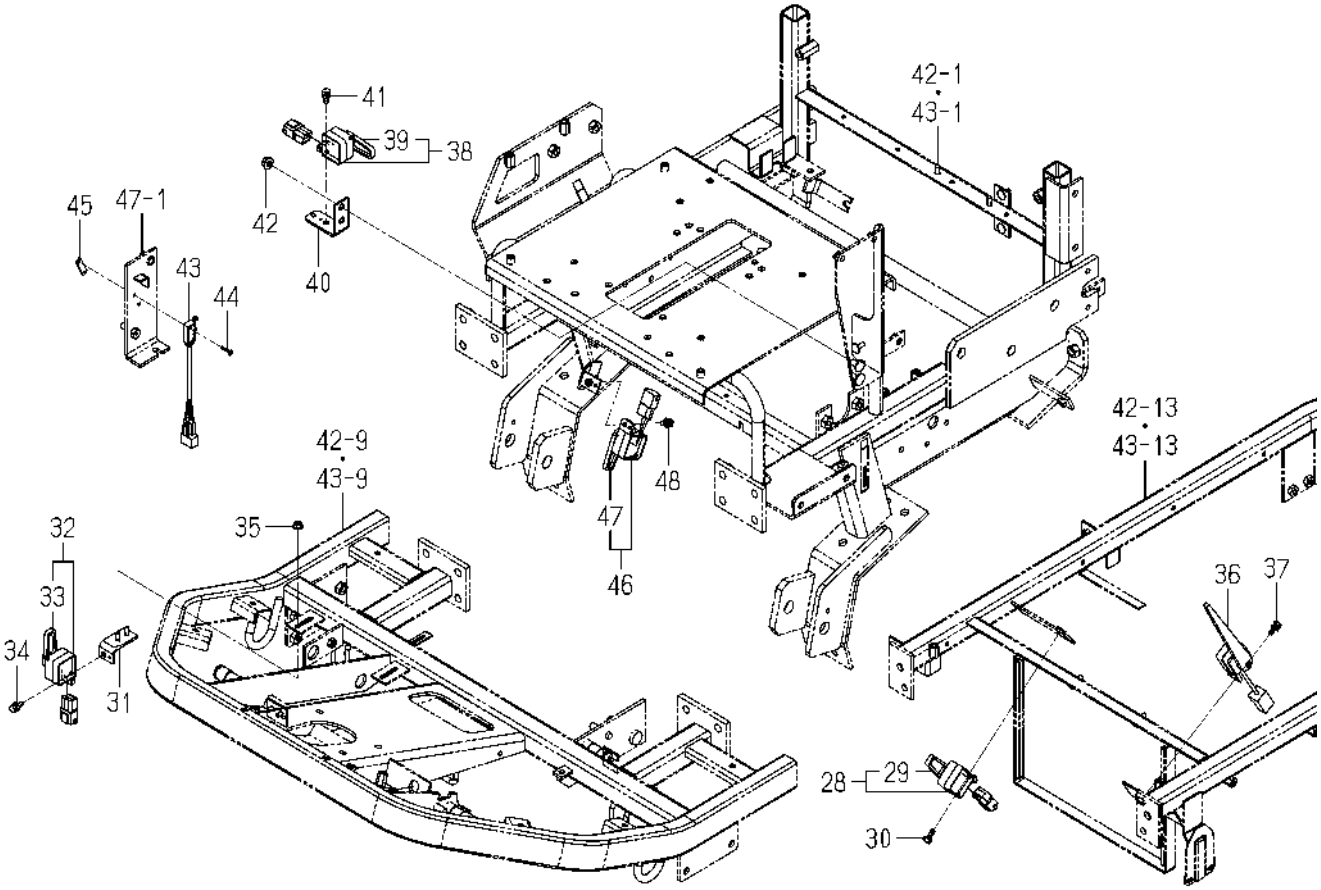

1832-680 -0100

KEY	PART CODE	DESCRIPTION	SPC	TYPE OF MODEL SF224F	TYPE OF MODEL SF235F	ITC	COL	GRP	REMARKS
31	1832-680-230-00	STAY/SWITCH/HST COMP	*	2	2				
32	1716-680-330-10	SWITCH/LEVER ASSY	*	2	2				
33	1716-680-222-00	ARM	*	2	2				
34	V210-360-601-60	BOLT,SP/M6X16	*	2	2				
35	V360-260-006-00	NUT/WASHER/M6	*	4	4				
36	3829-282-610-00	SENSOR/STRAW/L/165	*	1	1				
37	V210-360-601-60	BOLT,SP/M6X16	*	1	1				
38	1716-680-330-10	SWITCH/LEVER ASSY	*	1	1				
39	1716-680-222-00	ARM	*	1	1				
40	1809-801-280-00	PLATE/SWITCH COMP	*	1	1				
41	V210-360-601-60	BOLT,SP/M6X16	*	1	1				
42	V362-260-008-00	NUT/WASHER/M8	*	2	2				
43	1725-680-220-10	SWITCH/LIMIT ASSY	*	1	1				
44	1614-129-003-00	SCREW/M03X20	*	2	2				
45	3642-496-007-10	PLATE,SWITCH	*	1	1				
46	1716-680-330-10	SWITCH/LEVER ASSY	*	1	1				
47	1716-680-222-00	ARM	*	1	1				
48	V210-360-601-60	BOLT,SP/M6X16	*	1	1				

FIG. 67 HARNESS SYSTEM

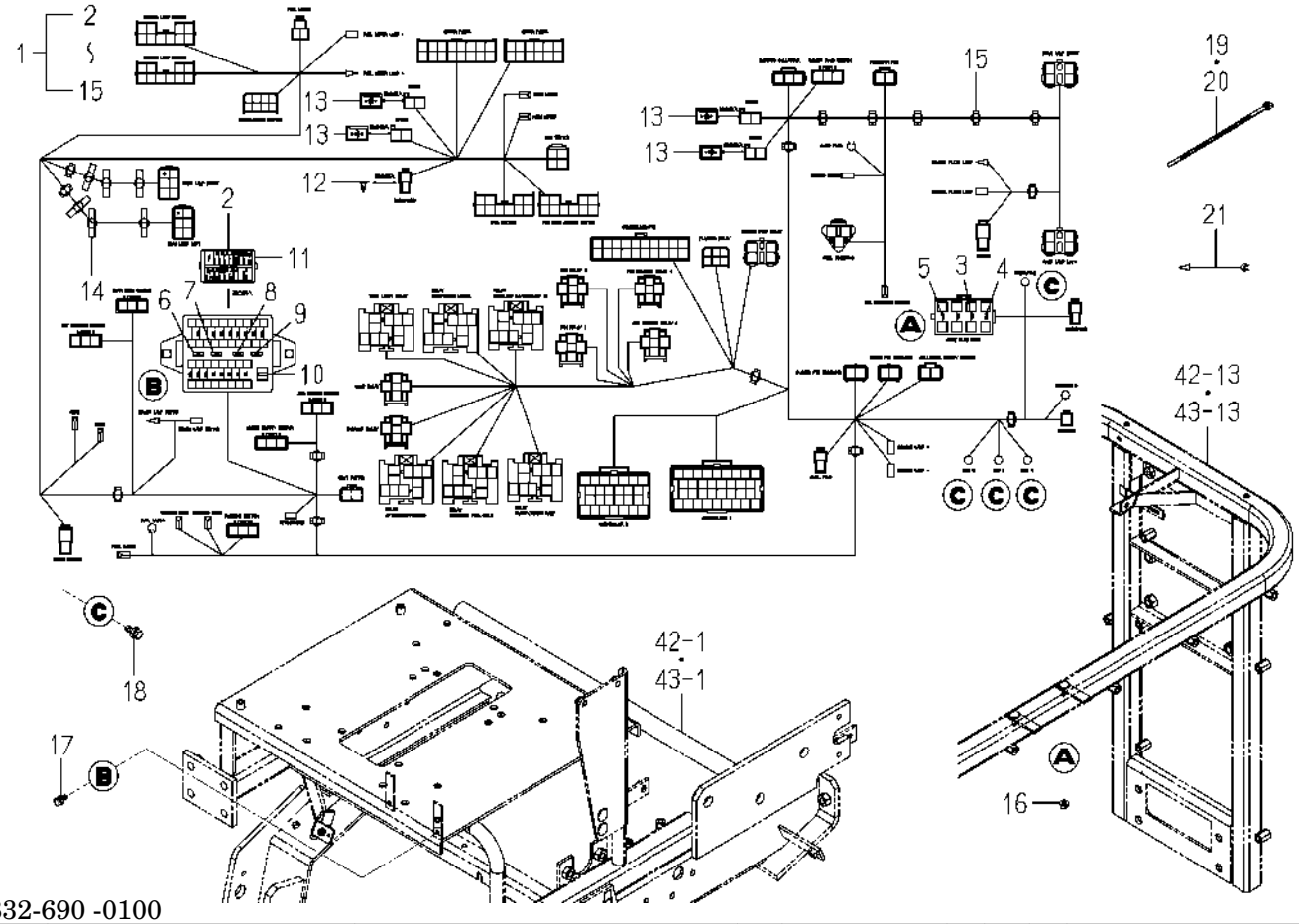

1832-690 -0100

KEY	PART CODE	DESCRIPTION	SPC	TYPE OF MODEL SF224F	TYPE OF MODEL SF235F	ITC	COL	GRP	REMARKS
1	1832-690-200-10	HARNESS/MAIN ASSY	*	1	1				
2	1832-690-202-00	LABEL/FUSE	*	1	1				
3	1832-690-203-00	FUSE/SLOWBLOW/50A	*	1	1				
4	3829-260-303-00	FUSE/SLOW BLOW/60A	*	1	1				
5	1650-650-222-00	FUSE/SLOW BLOW/40A	*	2	2				
6	3824-247-202-00	FUSE/BLADE/32V05A	*	6	6				
7	3821-262-202-00	FUSE/BLADE/32V10A	*	6	6				
8	3821-262-203-00	FUSE(BLADE/32V15A)	*	4	4				
9	3821-262-204-00	FUSE/BLADE/32V20A	*	4	4				
10	3821-262-209-00	TOOL/FUSE	*	1	1				
11	3824-247-204-00	COVER/FUSE	*	1	1				
12	1809-690-204-00	RESISTER/8	*	1	1				
13	3650-262-202-00	DIODE/3.0A	*	4	4				
14	1725-690-071-00	BAND	*	6	6				
15	1809-690-205-00	CLIP/BAND/4.5	*	15	15				
16	V360-260-006-00	NUT/WASHER/M6	*	2	2				
17	V230-360-601-60	FLANGEBOLT/M6X16	*	2	2				
18	V211-360-802-00	BOLT,SP/M8X20	*	4	4				
19	1342-402-006-00	BAND,WIRE/250	*	15	15				
20	1376-402-003-00	BAND,WIRE/140	*	10	10				
21	1600-624-004-10	HARNESS/OILPRESSURE	*	1	1				

FIG. 68 HARNESS SYSTEM(SF224F TYPE)

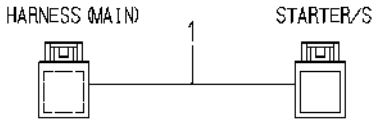

1832-690A-0100

KEY	PART CODE	DESCRIPTION	SPC	TYPE OF MODEL		ITC	COL	GRP	REMARKS
				SF224F	SF235F				
1	1832-690-210-00	HARNESS/JOINT ASSY	*	1					

FIG. 69 CONTROLLER SYSTEM

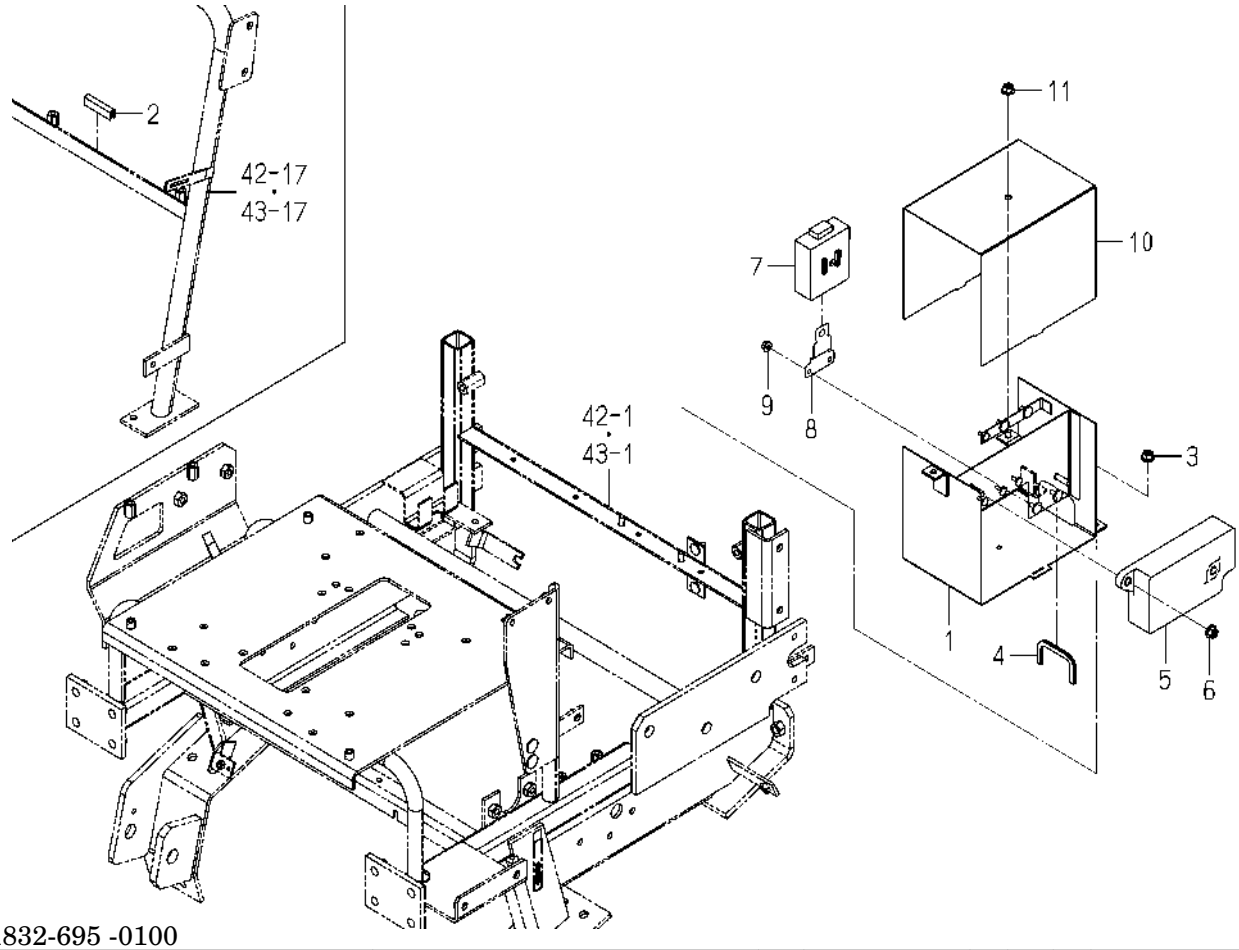

1832-695 -0100

KEY	PART CODE	DESCRIPTION	SPC	TYPE OF MODEL SF224F	TYPE OF MODEL SF235F	ITC	COL	GRP	REMARKS
1	1832-695-210-20	CASE/CONTROLLER COMP	*	1	1				
2	3666-202-005-10	PAD/50	*	1	1				
3	V362-260-008-00	NUT/WASHER/M8	*	2	2				
4	1636-631-008-00	TRIM/140	*	1	1				
5	1832-695-200-00	CONTROLLER ASSY	*	1	1				
6	V362-260-008-00	NUT/WASHER/M8	*	2	2				
7	1832-695-250-00	CONTROLLER/PTO ASSY	*	1	1				
8	1742-662-001-00	STAY/CONTROLLER	*	1	1				
9	V360-260-006-00	NUT/WASHER/M6	*	2	2				
10	1832-695-001-00	COVER/CONTROLLER	*	1	1		7F		
11	V362-260-008-00	NUT/WASHER/M8	*	1	1				

FIG. 70 FRAME(MAIN)SYSTEM

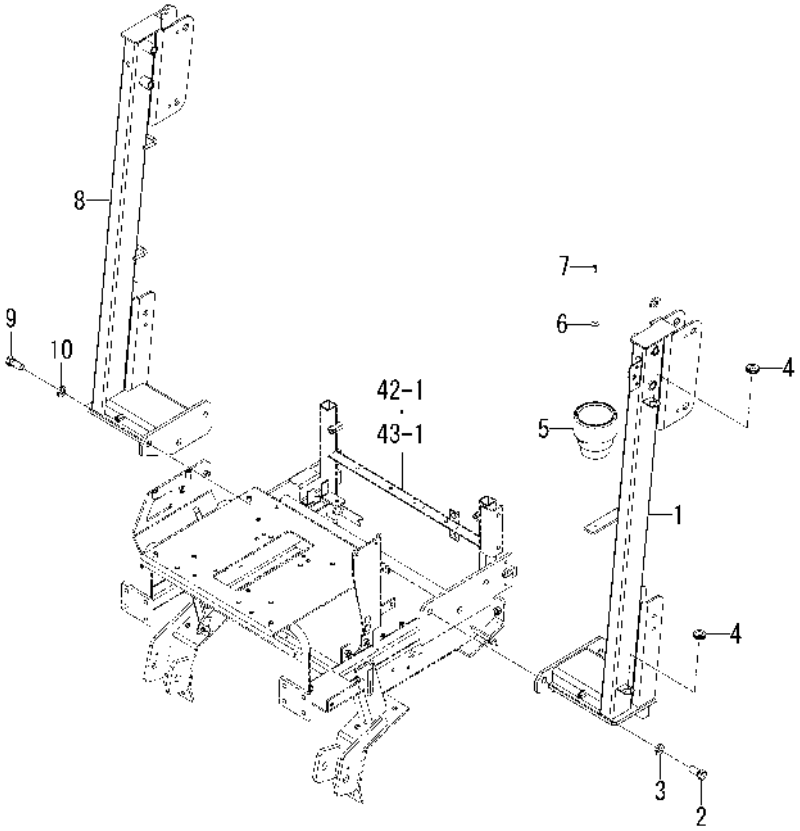

1832-701 -0100

KEY	PART CODE	DESCRIPTION	SPC	TYPE OF MODEL SF224F	TYPE OF MODEL SF235F	ITC	COL	GRP	REMARKS
1	1832-701-210-10	FRAME/LH COMP	*	1	1		4L		
2	V201-461-203-50	BOLT/M12X35/9T	*	3	3				
3	V401-160-016-00	WASHER,SP/M16	*	3	3				
4	1575-616-005-00	GROMMET/17X21X3	*	2	2				
5	1742-606-001-10	TRAY/BOTTLE	*	1	1				
6	3829-248-003-00	WASHER/05X20X01	*	1	1				
7	V120-265-001-60	SCREW,SEMS/M5X16	*	1	1				
8	1832-701-230-10	FRAME/RH COMP	*	1	1		4L		
9	V201-461-203-50	BOLT/M12X35/9T	*	3	3				
10	V401-160-016-00	WASHER,SP/M16	*	3	3				

FIG. 71 FRAME(UPPER)SYSTEM

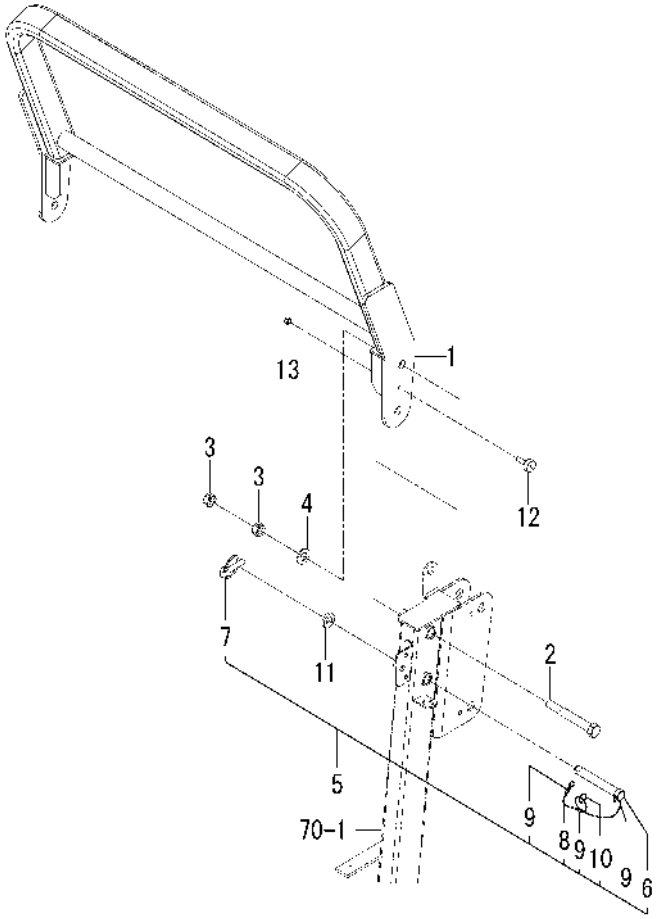

1832-702 -0100

KEY	PART CODE	DESCRIPTION	SPC	TYPE OF MODEL SF224F	TYPE OF MODEL SF235F	ITC	COL	GRP	REMARKS
1	1832-702-210-00	FRAME/UPPER COMP	*	1	1		4L		
2	1832-702-002-00	BOLT/M16X120	*	2	2				
3	1773-702-001-00	NUT/M16	*	4	4				
4	V411-260-016-00	WASHER,PL/M16	*	2	2				
5	1832-702-250-00	PIN ASSY	*	2	2				
6	1832-702-251-00	PIN/19X124	*	2	2				
7	1673-525-002-30	LINKPIN	*	2	2				
8	1614-702-551-20	BAND	*	2	2				
9	1614-702-552-00	RING	*	6	6				
10	V720-102-402-00	O-RING/1A,P20	*	2	2				
11	1773-702-002-00	INSULATOR	*	2	2				
12	1560-630-024-00	INSULATOR	*	2	2				
13	V304-260-008-00	NUT/M8	*	2	2				

FIG. 72 BLOWER SYSTEM(B TYPE)

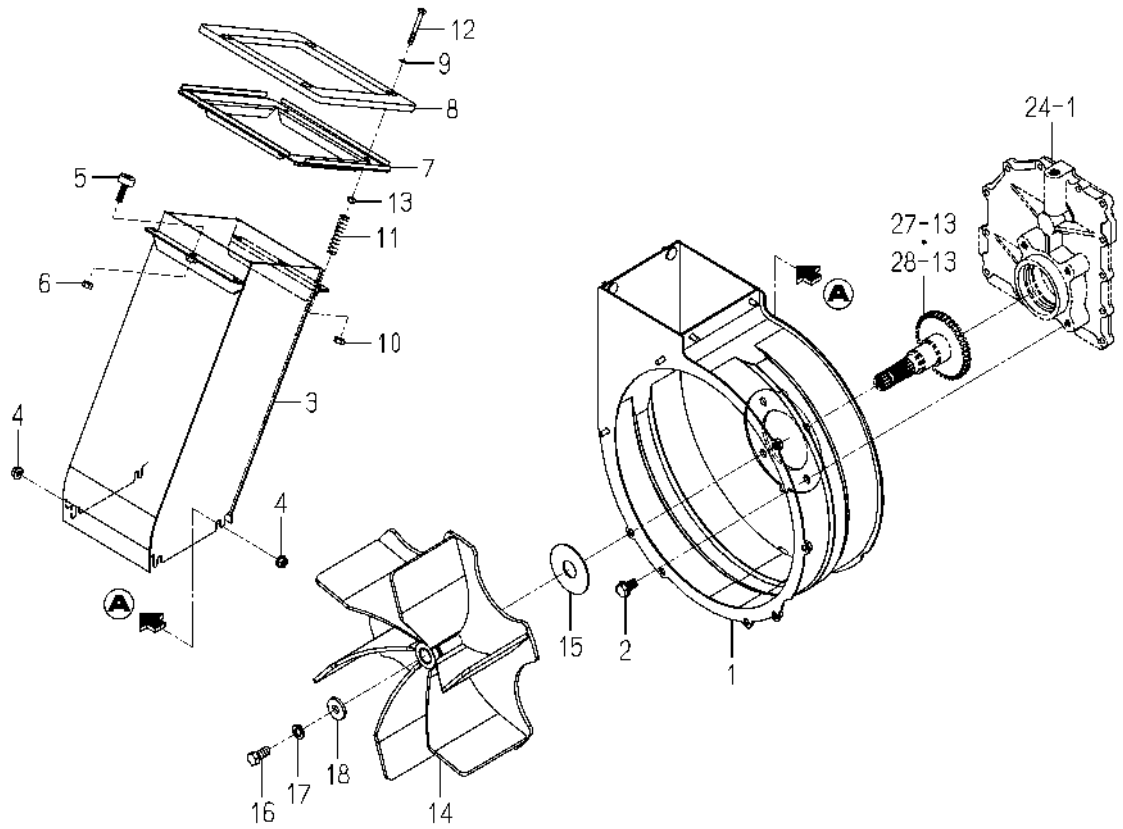

1832-801 -0100

KEY	PART CODE	DESCRIPTION	SPC	TYPE OF MODEL SF224F	TYPE OF MODEL SF235F	ITC	COL	GRP	REMARKS
1	1832-801-210-00	CASE/BLOWER COMP	*	1	1				
2	V231-361-202-00	FLANGEBOLT/M12X20	*	4	4				
3	1832-801-220-10	CHUTE/BLOWER COMP	*	1	1				
4	V362-260-008-00	NUT/WASHER/M8	*	4	4				
5	1421-602-005-10	CUSHION,B/ RUBBER	*	2	2				
6	V304-260-008-00	NUT/M8	*	2	2				
7	1832-801-230-00	CHUTE/GUIDE COMP	*	1	1				
8	1809-801-002-10	INSULATOR/CHUTE	*	1	1				
9	V411-260-006-00	WASHER,PL/M6	*	4	4				
10	1118-606-002-10	U-NUT	*	4	4				
11	8654-501-043-00	SPRING/HC058	*	4	4				
12	V200-260-605-00	BOLT/M6X50	*	4	4				
13	V301-260-006-00	NUT/M6	*	4	4				
14	1832-801-250-00	FAN COMP	*	1	1				
15	8669-865-003-00	WASHER/27X79X02	*	1	1				
16	1809-801-004-00	BOLT/LH/M12X1.25X25	*	1	1				
17	1809-801-007-00	S.W/LH/M12	*	1	1				
18	3621-702-003-00	WASHER,PULLEY	*	1	1				

FIG. 73 ORNAMENT(SF235F TYPE)

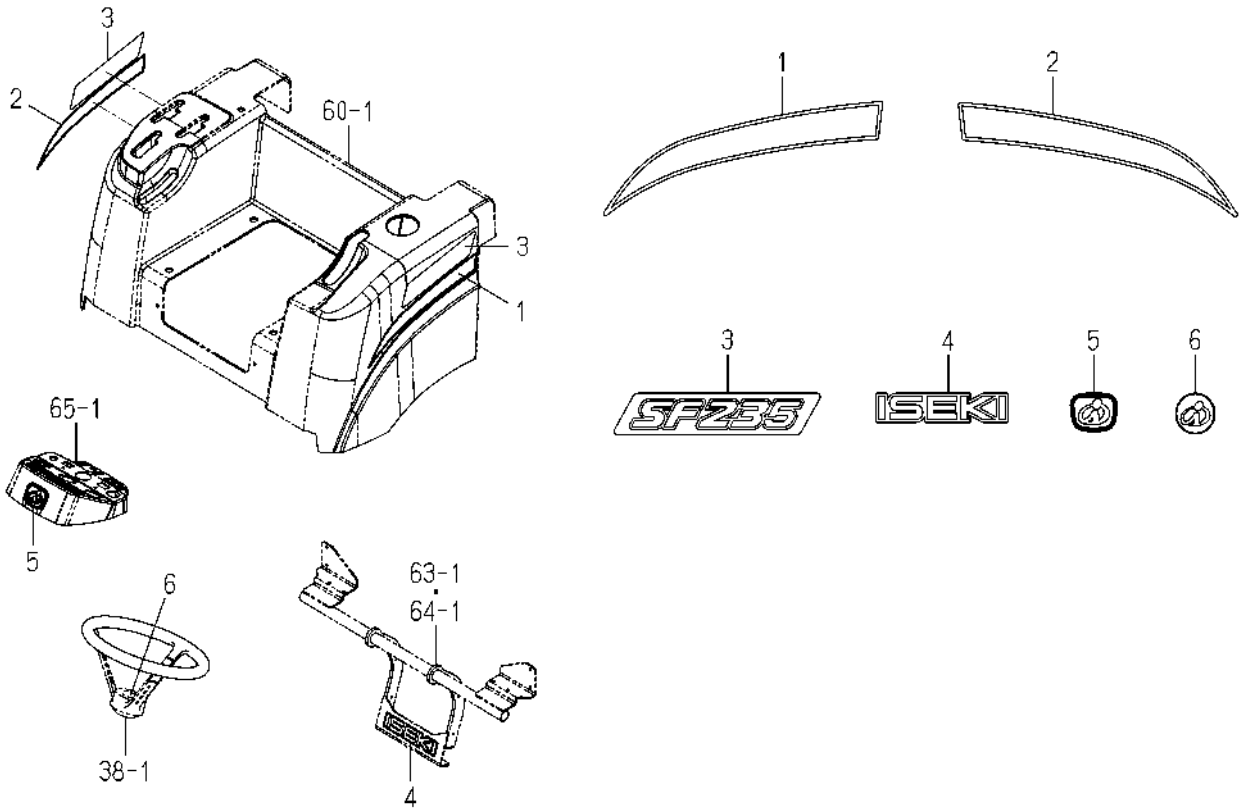

1832-901 -0100

KEY	PART CODE	DESCRIPTION	SPC	TYPE OF MODEL SF224F	TYPE OF MODEL SF235F	ITC	COL	GRP	REMARKS
1	1832-901-001-00	MOLDING/FENDER/LH	*		1				
2	1832-901-002-00	MOLDING/FENDER/RH	*		1				
3	1832-901-003-00	ORNAMENT/235	*		2				
4	1716-901-016-00	ORNAMENT/ISEKI	*		1				
5	3533-901-012-00	ORNAMENT/ISEKI	*		1				
6	1696-901-006-00	ORNAMENT/STEERING	*		1				

FIG. 74 ORNAMENT(SF224F TYPE)

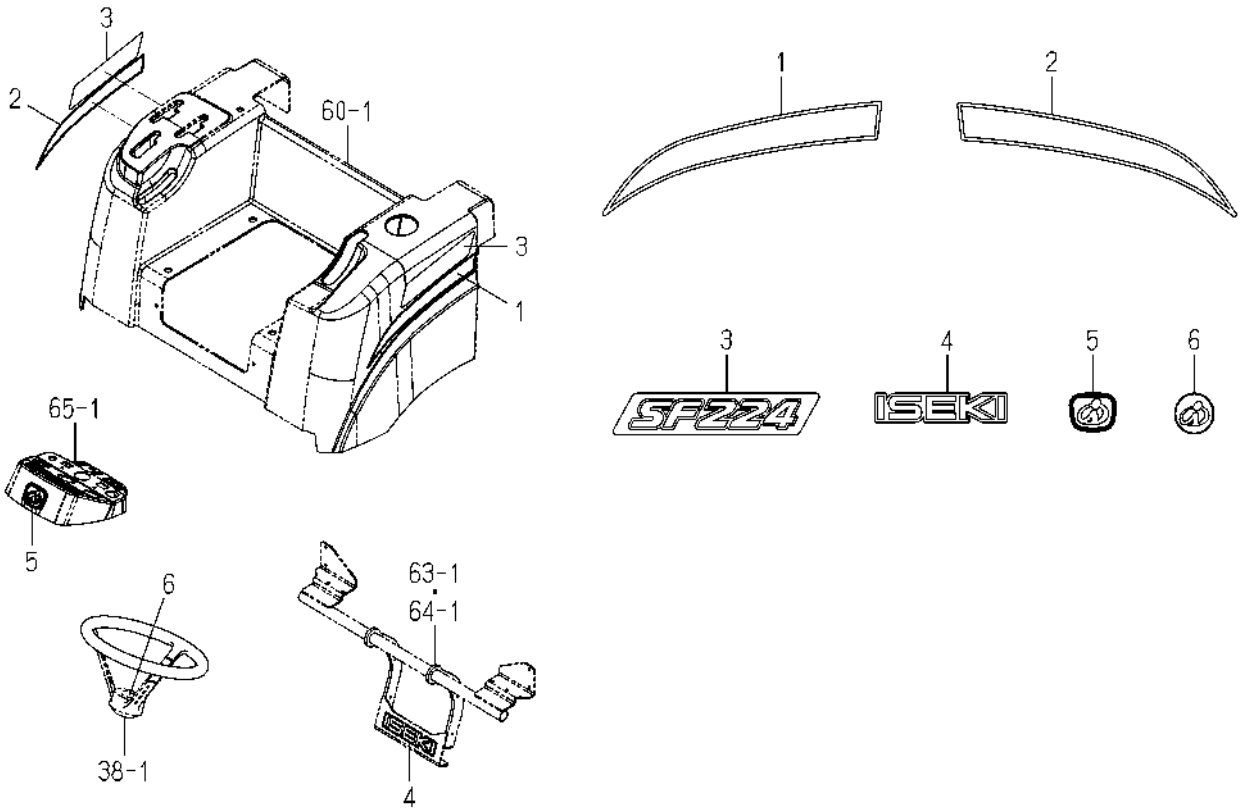

1832-901A-0100

KEY	PART CODE	DESCRIPTION	SPC	TYPE OF MODEL SF224F	TYPE OF MODEL SF235F	ITC	COL	GRP	REMARKS
1	1832-901-001-00	MOLDING/FENDER/LH	*	1					
2	1832-901-002-00	MOLDING/FENDER/RH	*	1					
3	1832-901-013-00	ORNAMENT/224	*	2					
4	1716-901-016-00	ORNAMENT/ISEKI	*	1					
5	3533-901-012-00	ORNAMENT/ISEKI	*	1					
6	1696-901-006-00	ORNAMENT/STEERING	*	1					

FIG. 75 LABEL(CONTROL)

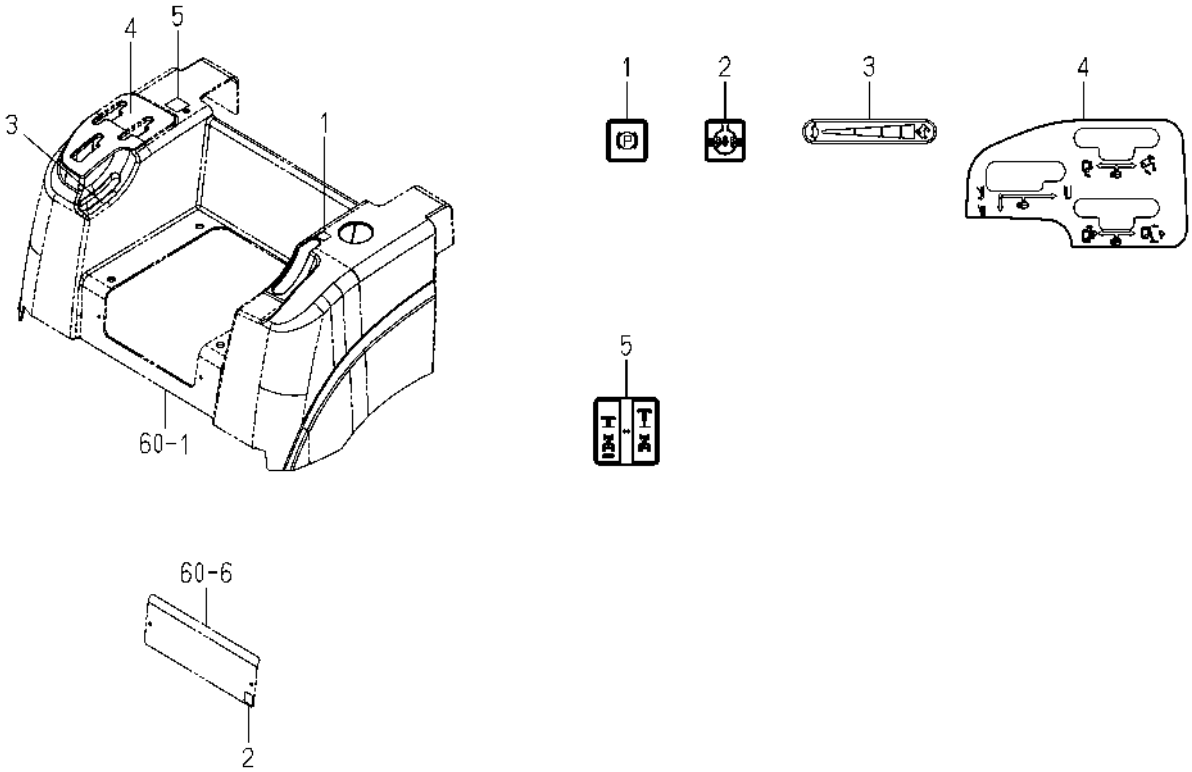

1832-902 -0100

KEY	PART CODE	DESCRIPTION	SPC	TYPE OF MODEL		ITC	COL	GRP	REMARKS
				SF224F	SF235F				
1	1770-902-051-00	LABEL/PARKING	*	1	1				
2	1770-902-004-00	LABEL/DIFF	*	1	1				
3	1757-901-011-00	LABEL/CONTROL/SHROTT	*	1	1				
4	1832-902-001-10	LABEL/CONTROL	*	1	1				
5	1832-902-002-00	LABEL/4WD	*	1	1				

FIG. 76 LABEL(CAUTION)(SF235F TYPE)

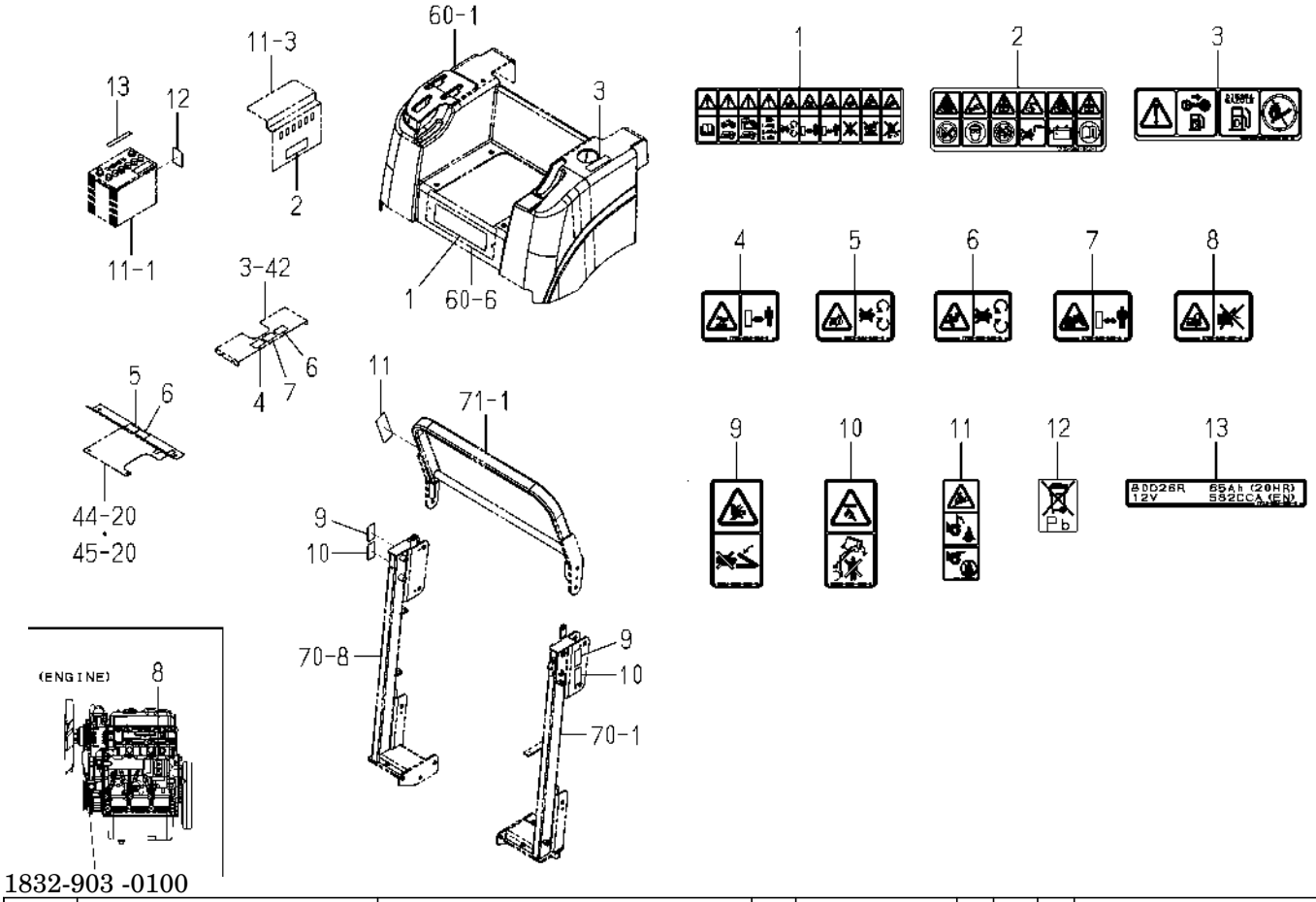

1832-903 -0100

KEY	PART CODE	DESCRIPTION	SPC	TYPE OF MODEL SF224F	TYPE OF MODEL SF235F	ITC	COL	GRP	REMARKS
1	1705-904-004-00	LABEL/CAUTION	*		1				
2	1705-904-002-10	LABEL/BATTERY	*		1				
3	1739-904-004-00	LABEL/FUEL	*		1				
4	1739-904-001-00	LABEL/WARNING/HOT	*		1				
5	1674-904-008-00	LABEL/WARNING/BELT	*		1				
6	1705-902-006-00	LABEL/W/FAN	*		2				
7	1705-902-008-00	LABEL/W/RADIATOR	*		1				
8	1705-902-007-00	LABEL/W/STARTER	*		1				
9	8664-905-003-00	LABEL/CAUTION	*		2				
10	8664-955-002-00	LABEL/CAUTION/L	*		2				
11	1674-904-005-10	LABEL/ROPS	*		1				
12	1817-904-004-00	LABEL/BATTERY	*		1				
13	1774-904-032-00	LABEL/BATTERY/80D26R	*		1				

FIG. 77 LABEL(CAUTION)(SF224F TYPE)

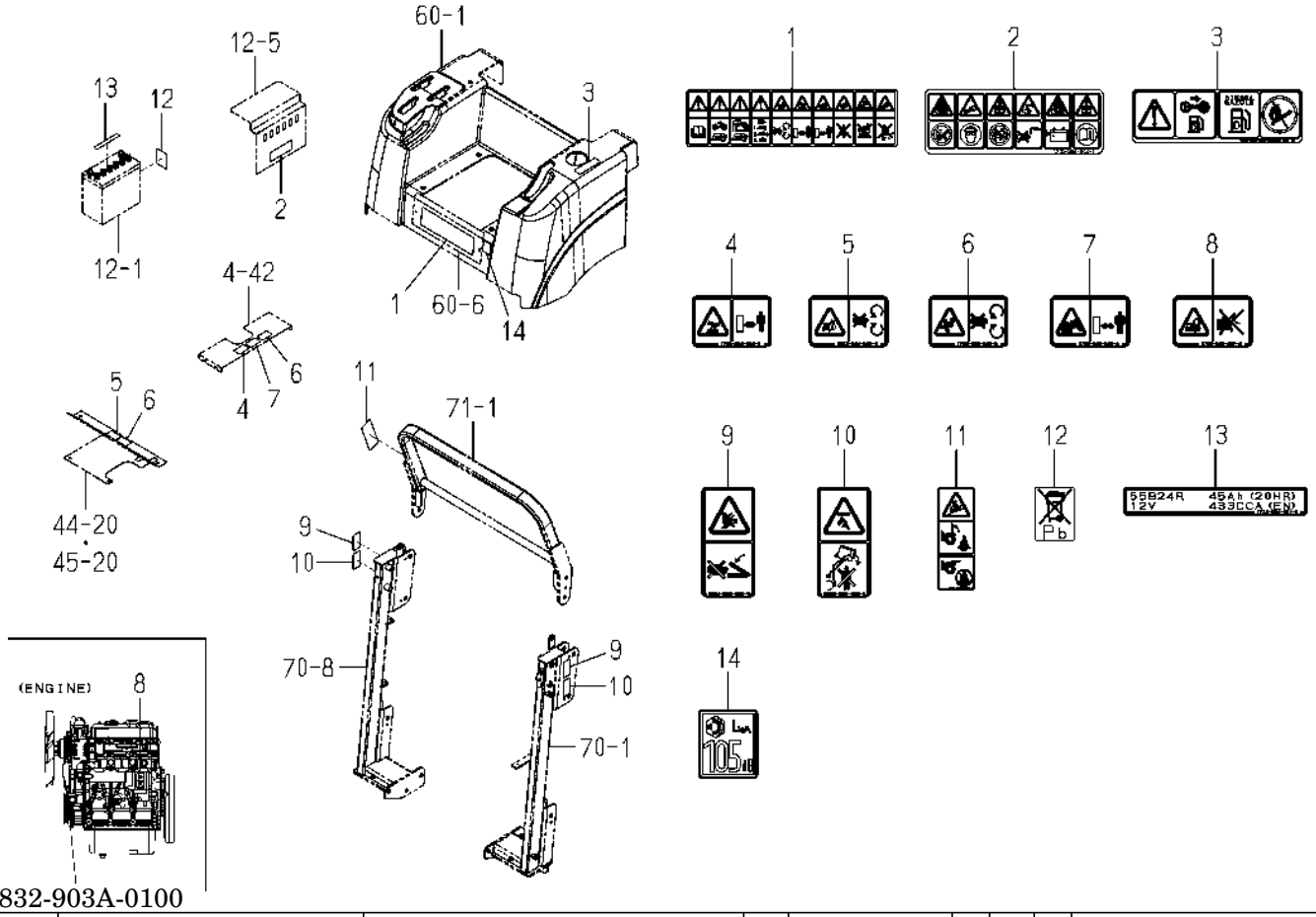

1832-903A-0100

KEY	PART CODE	DESCRIPTION	SPC	TYPE OF MODEL SF224F	TYPE OF MODEL SF235F	ITC	COL	GRP	REMARKS
1	1705-904-004-00	LABEL/CAUTION	*	1					
2	1705-904-002-10	LABEL/BATTERY	*	1					
3	1739-904-004-00	LABEL/FUEL	*	1					
4	1739-904-001-00	LABEL/WARNING/HOT	*	1					
5	1674-904-008-00	LABEL/WARNING/BELT	*	1					
6	1705-902-006-00	LABEL/W/FAN	*	2					
7	1705-902-008-00	LABEL/W/RADIATOR	*	1					
8	1705-902-007-00	LABEL/W/STARTER	*	1					
9	8664-905-003-00	LABEL/CAUTION	*	2					
10	8664-955-002-00	LABEL/CAUTION/L	*	2					
11	1674-904-005-10	LABEL/ROPS	*	1					
12	1817-904-004-00	LABEL/BATTERY	*	1					
13	1774-904-031-10	LABEL/BATTERY/55B24R	*	1					
14	1705-904-011-00	LABEL/NOISE/LWA/105	*	1					

FIG. 78 LABEL(CE)

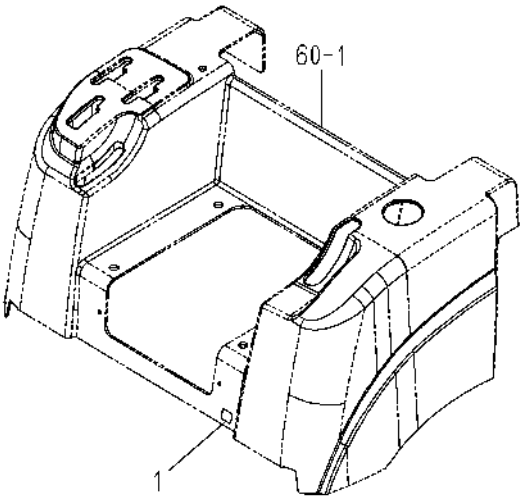

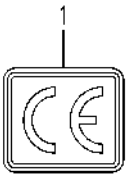

1709-905 -0100

KEY	PART CODE	DESCRIPTION	SPC	TYPE OF MODEL		ITC	COL	GRP	REMARKS
				SF224F	SF235F				
1	2500-901-027-00	LABEL/CE	*	1	1				

FIG. 79 WEIGHT(REAR)SET SYSTEM (EXCEPT B TYPE-STANDARD/ B TYPE-OPTION)

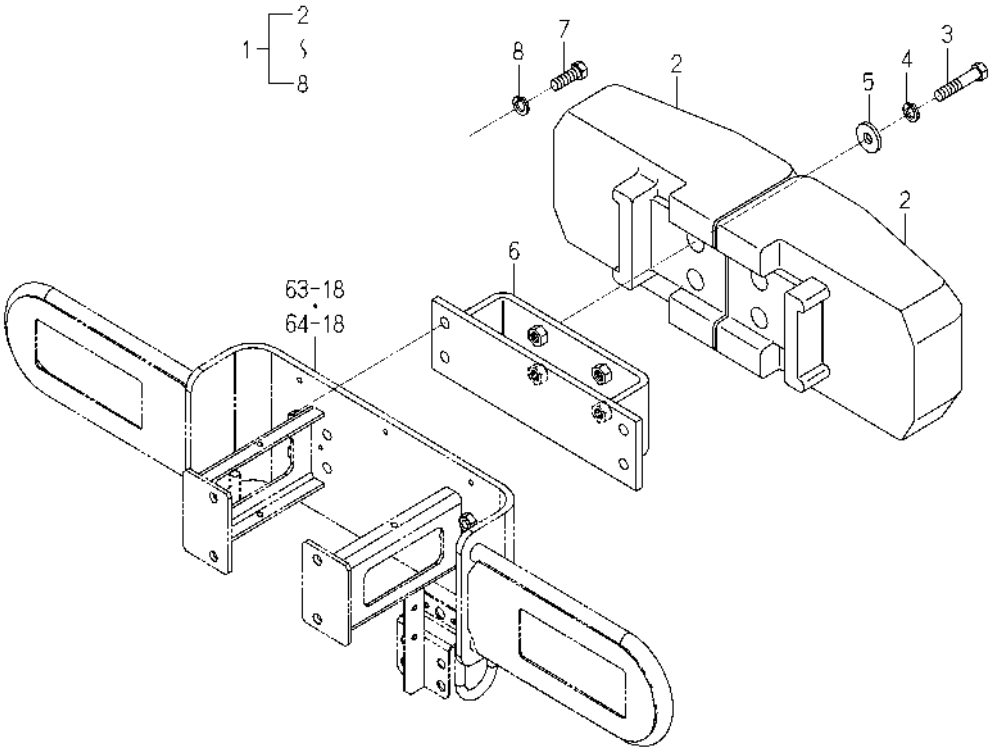

1771-923 -0100

KEY	PART CODE	DESCRIPTION	SPC	TYPE OF MODEL SF224F	TYPE OF MODEL SF235F	ITC	COL	GRP	REMARKS
1	1771-923-200-10	WEIGHT/REAR SET	*	1	1				
2	1636-436-002-00	WEIGHT/40	*	2	2				
3	V201-361-206-00	BOLT/M12X60/7T	*	4	4				
4	V401-160-012-00	WASHER,SP/M12	*	4	4				
5	3621-702-003-00	WASHER,PULLEY	*	4	4				
6	1771-923-210-00	BRACKET/WEIGHT COMP	*	1	1				
7	V201-361-203-50	BOLT/M12X35/7T	*	4	4				
8	V401-160-012-00	WASHER,SP/M12	*	4	4				

FIG. 80 PLATE(BUMPER)&BOLT SYSTEM (OPTION)

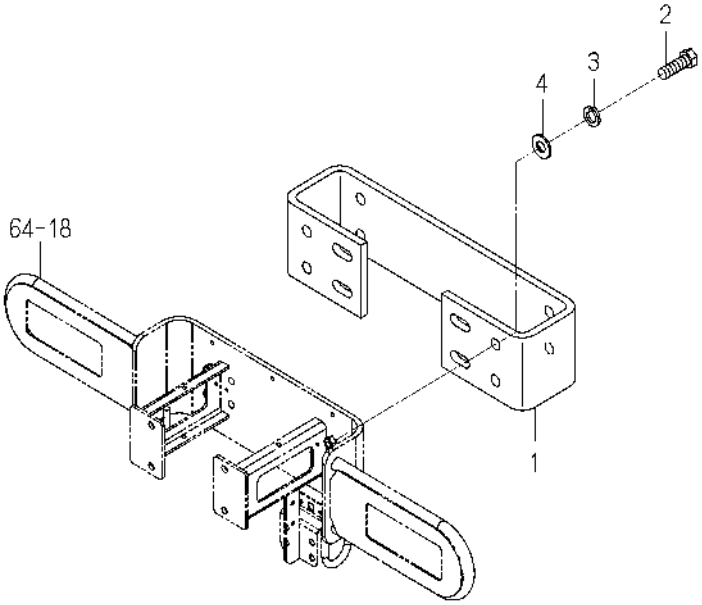

1728-410B-0100

KEY	PART CODE	DESCRIPTION	SPC	TYPE OF MODEL		ITC	COL	GRP	REMARKS
				SF224F	SF235F				
1	1620-410-001-10	PLATE/BUMPER	T	1	1				
2	V201-361-203-50	BOLT/M12X35/7T	T	4	4				
3	V401-160-012-00	WASHER,SP/M12	T	4	4				
4	V411-260-012-00	WASHER,PL/M12	T	4	4				

FIG. 81 WEIGHT(15)SET(OPTION)

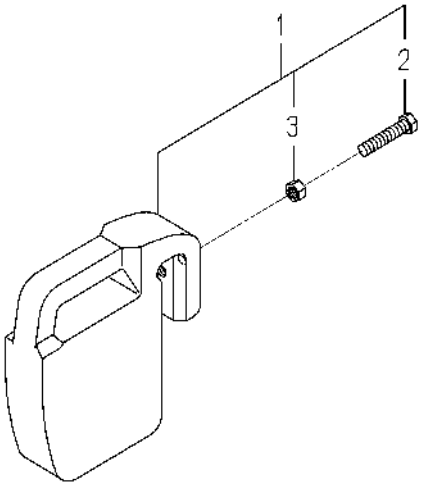

1771-922 -0100

KEY	PART CODE	DESCRIPTION	SPC	TYPE OF MODEL		ITC	COL	GRP	REMARKS
				SF224F	SF235F				
1	1614-922-200-20	WEIGHT/15 SET	T	5	5				
2	W201-261-206-00	BOLT/M12X60	T	5	5				
3	V305-260-012-00	NUT/M12	T	5	5				

FIG. 82 COMPONENT PARTS FOR K500-008-000-00 ON Fig.19

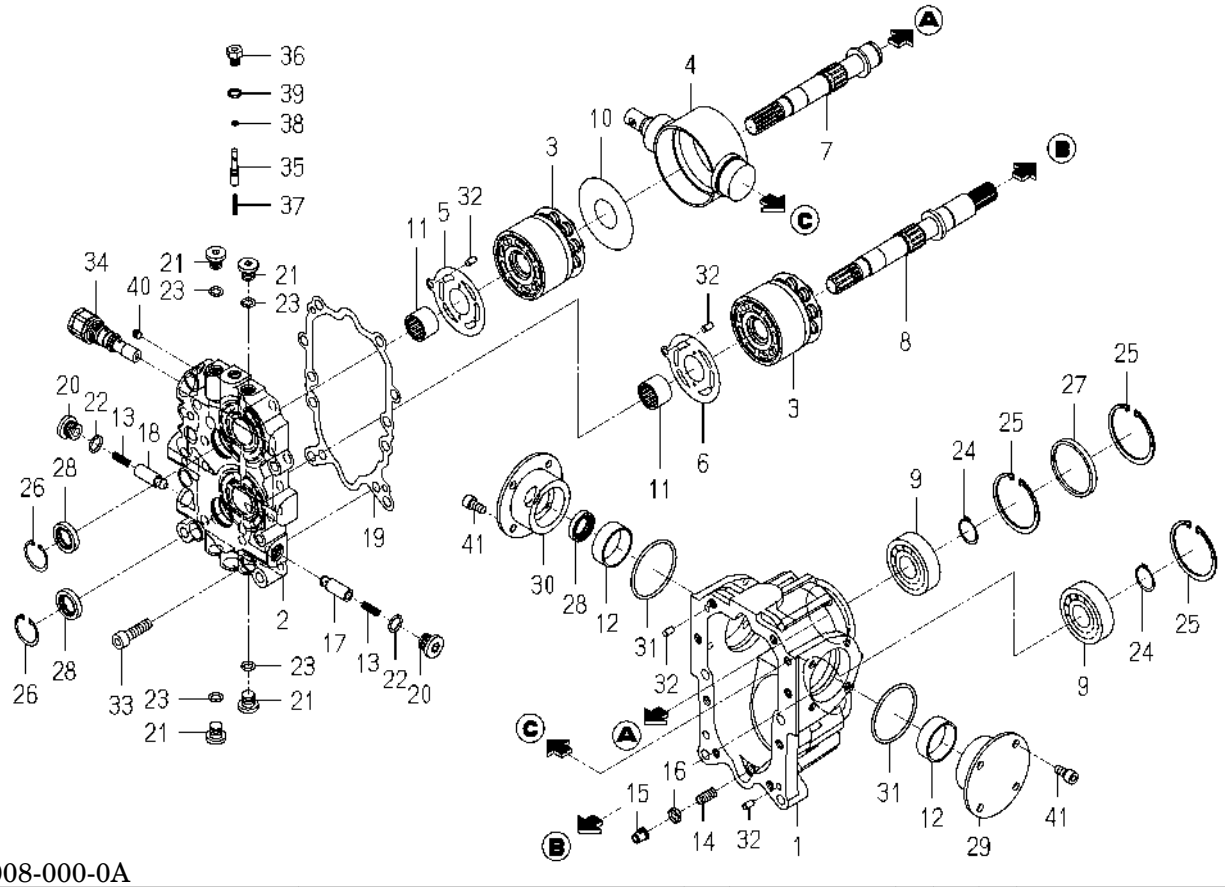

K500-008-000-0A

KEY	PART CODE	DESCRIPTION	SPC	TYPE OF MODEL SF224F	TYPE OF MODEL SF235F	ITC	COL	GRP	REMARKS
1	K500-008-001-00	CASE/HMP1/008	*	1	1				
2	K500-008-004-00	BLOCK/PORT/HMP1/008	*	1	1				
3	K500-006-300-10	BLOCK/CYLINDER/HMP1	*	2	2				
4	K500-006-006-10	PLATE/SWASH/HMP1/006	*	1	1				
5	K510-001-010-00	PLATE/VALVE/PUMP	*	1	1				
6	K510-001-011-00	PLATE/VALVE/MOTOR	*	1	1				
7	K500-008-012-00	SHAFT/PUMP/HMP1/008	*	1	1				
8	K500-008-013-00	SHAFT/MOTOR/HMP1/008	*	1	1				
9	V600-110-630-50	BEARING,RB/6305	*	2	2				
10	K500-006-015-00	PLATE/THRUST/HMP1/00	*	2	2				
11	K510-001-016-00	NEEDLE	*	2	2				
12	K500-006-017-00	BUSH/40X44X15	*	2	2				
13	K510-001-020-00	SPRING/HC030	*	2	2				
14	K510-003-021-00	SPRING/HC021	*	1	1				
15	K510-003-022-00	POPPET/RELIEF	*	1	1				
16	K510-003-037-00	PLATE/SPRING	*	1	1				
17	K510-005-023-00	POPPET/CHECK/0.5	*	1	1				
18	K500-008-023-00	POPPET/CHECK/0.9X2	*	1	1				
19	K500-008-026-00	GASKET/HMP1/008	*	1	1				
20	K510-001-029-00	PLUG(G3/8)	*	2	2				
21	K275-001-003-00	PLUG(PF1/4)	*	4	4				
22	V720-112-401-40	O-RING/1B,P14	*	2	2				
23	V720-112-401-10	O-RING/1B,P11	*	4	4				
24	V704-140-025-00	RING,SNAP/25 C	*	2	2				
25	1710-241-053-00	RING/SNAP/R62	*	3	3				
26	V705-140-032-00	RING,SNAP/32 C	*	2	2				
27	3640-547-007-00	PLUG,CAP/62X6	*	1	1				
28	K510-001-039-00	OIL SEAL	*	3	3				
29	K500-008-034-00	COVER/BUSH/HMP1/008	*	1	1				
30	K500-008-035-00	COVER/TRUNNION/HMP1/	*	1	1				

FIG. 82 COMPONENT PARTS FOR K500-008-000-00 ON Fig.19

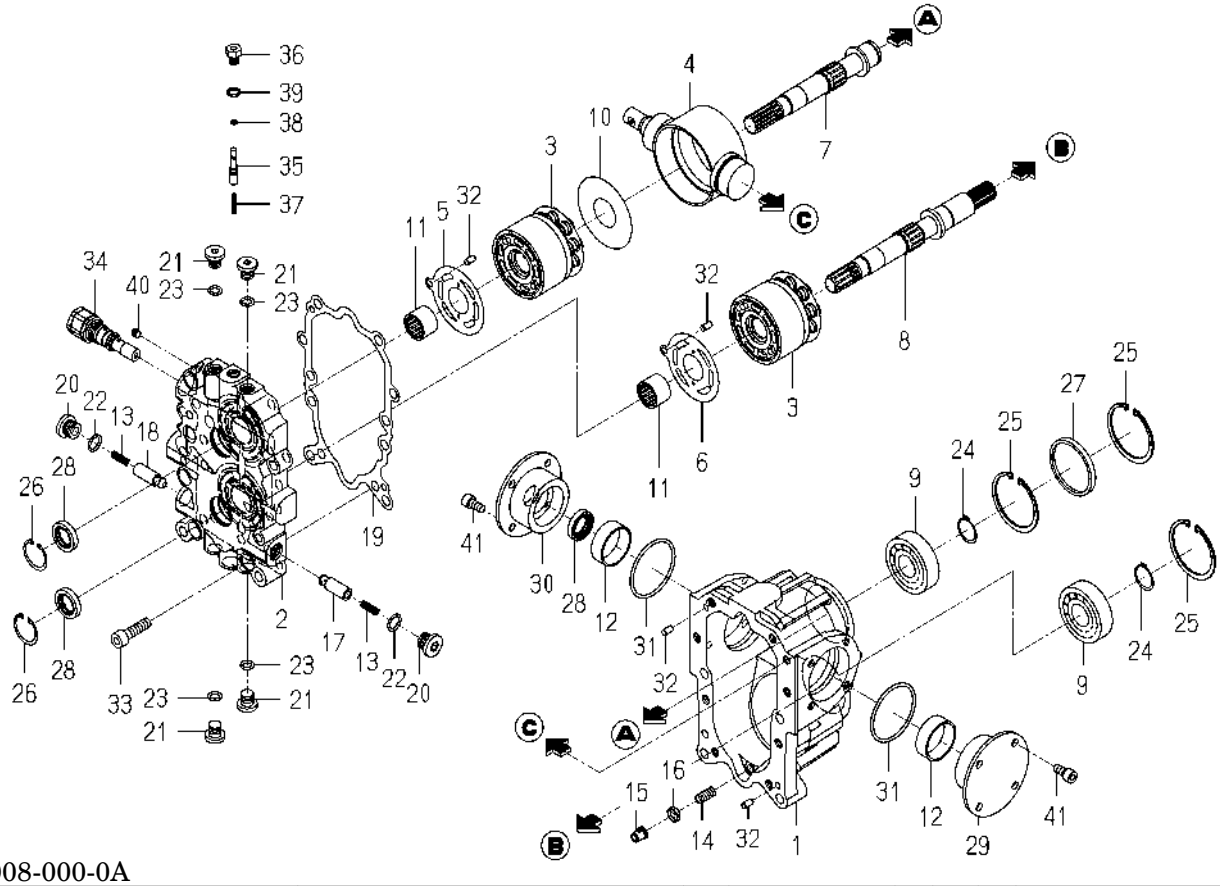

K500-008-000-0A

KEY	PART CODE	DESCRIPTION	SPC	TYPE OF MODEL SF224F	TYPE OF MODEL SF235F	ITC	COL	GRP	REMARKS
31	V721-103-106-00	O-RING/1A,G60	*	2	2				
32	K510-001-036-00	PIN,ST	*	4	4				
33	V220-541-003-50	SCREW,SOCKET/M10X35	*	8	8				
34	K500-008-100-00	VALVE/RELIEF/00 SET	*	1	1				
35	K510-003-301-00	SPOOL	*	1	1				
36	K510-018-302-00	PLUG/M12X1.25	*	1	1				
37	K510-003-303-00	SPRING/HC023	*	1	1				
38	K510-003-304-00	O-RING	*	1	1				
39	V720-111-901-00	O-RING/1B,P10	*	1	1				
40	V780-140-000-1T	PLUG/SCREW/SEAL	*	1	1				
41	K500-007-039-00	SCREW/SOCKET/M8X16	*	8	8				

FIG. 83 COMPONENT PARTS FOR 1672-105-210-10 ON Fig.9

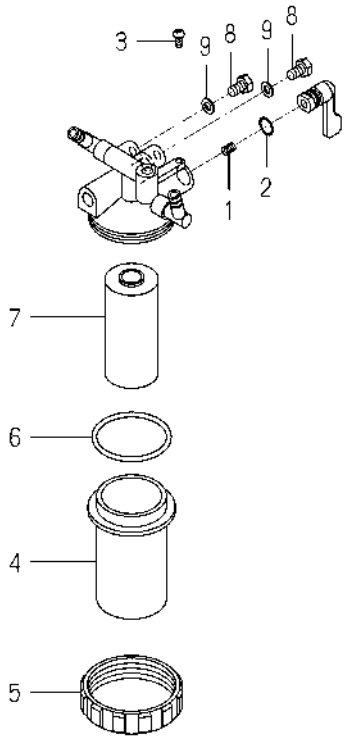

1672-105-210-1E

KEY	PART CODE	DESCRIPTION	SPC	TYPE OF MODEL		ITC	COL	GRP	REMARKS
				SF224F	SF235F				
1	1415-102-007-00	SPRING,VALVE	*	1	1				
2	V720-102-401-00	O-RING/1A,P10A	*	1	1				
3	1415-102-008-00	VIS	*	1	1				
4	1440-103-201-00	CAP	*	1	1				
5	1444-102-204-00	NUT,RING	*	1	1				
6	V720-103-504-40	O-RING/1A,P44	*	1	1				
7	1672-105-211-00	ELEMENT	*	1	1				
8	1572-102-003-00	BOLT/M06X08/APSET	*	2	2				
9	1415-102-013-00	PACKING	*	2	2				

FIG. 84 COMPONENT PARTS FOR 1720-221-210-00 ON Fig.48

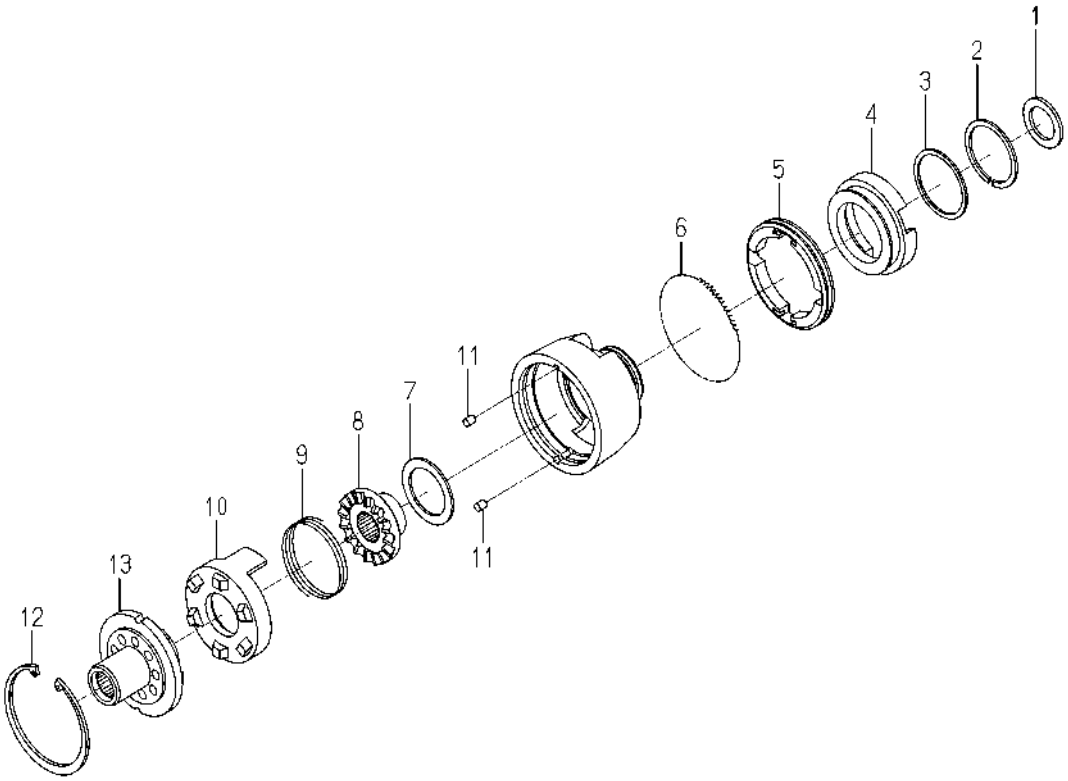

1720-221-210-0

KEY	PART CODE	DESCRIPTION	SPC	TYPE OF MODEL		ITC	COL	GRP	REMARKS
				SF224F	SF235F				
1	1720-221-211-00	WASHER	*	1	1				
2	1720-221-212-00	RING/SNAP/A	*	1	1				
3	1720-221-213-00	WASHER/A	*	1	1				
4	1720-221-214-00	RING/BRAKE	*	1	1				
5	1720-221-215-00	SHOE/BRAKE	*	4	4				
6	1720-221-216-00	SPRING	*	1	1				
7	1720-221-217-00	BUSH	*	1	1				
8	1720-221-218-00	CAM/DRIVEN	*	1	1				
9	1720-221-219-00	SPRING/A	*	1	1				
10	1720-221-221-00	CAM/CENTER	*	1	1				
11	1720-221-222-00	PIN/STRAIGHT	*	2	2				
12	1720-221-224-00	RING/SNAP/B	*	1	1				
13	1720-221-225-00	CAM/DRAIVE	*	1	1				

FIG. 85 COMPONENT PARTS FOR 1725-219-720-20 ON Fig.27,28

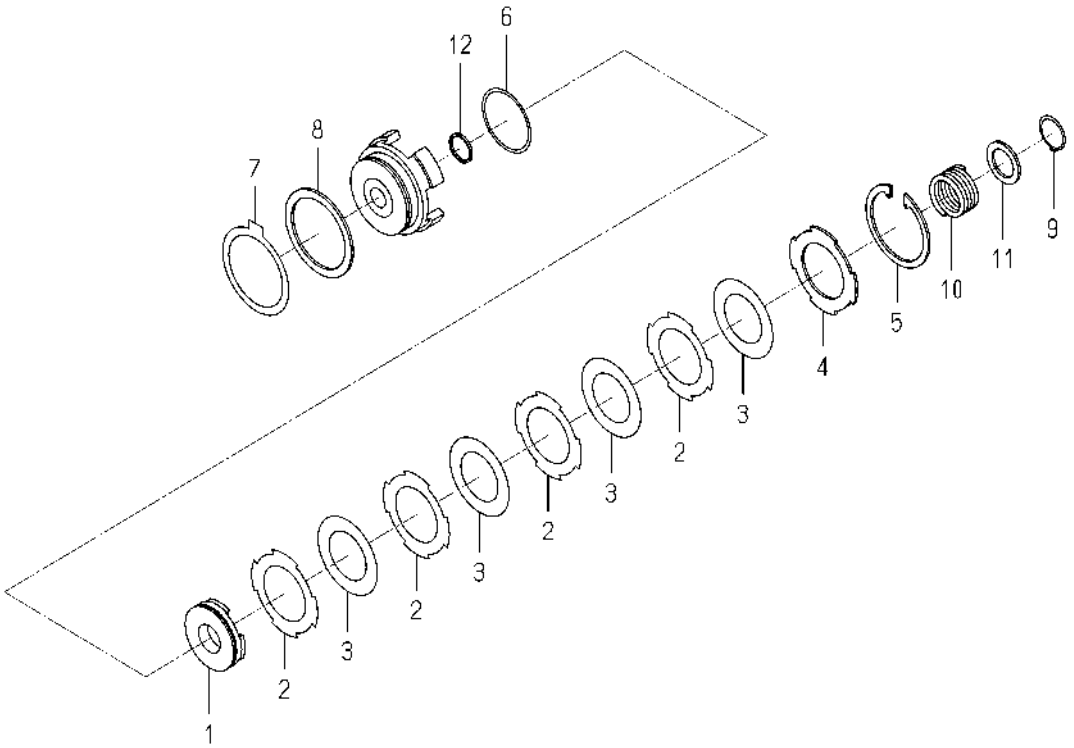

1725-219-720-2C

KEY	PART CODE	DESCRIPTION	SPC	TYPE OF MODEL		ITC	COL	GRP	REMARKS
				SF224F	SF235F				
1	1725-219-722-00	PISTON	*	1	1				
2	1725-219-723-10	PLATE/DISC	*	4	4				
3	1725-219-724-00	PLATE/SEPARATER	*	4	4				
4	1725-219-725-00	PLATE/BACK	*	1	1				
5	1725-219-726-00	RING/SNAP	*	1	1				
6	1725-219-727-00	RING/SEAL	*	1	1				
7	1725-219-728-00	DISC/BRAKE	*	1	1				
8	1725-219-729-00	PLATE/BRAKE	*	1	1				
9	1725-219-731-00	RING/SNAP	*	1	1				
10	1725-219-732-00	SPRING	*	1	1				
11	1725-219-733-00	WASHER	*	1	1				
12	1725-219-734-00	RING/O	*	1	1				

FIG. 86 COMPONENT PARTS FOR 1772-654-210-00 ON Fig.63,64

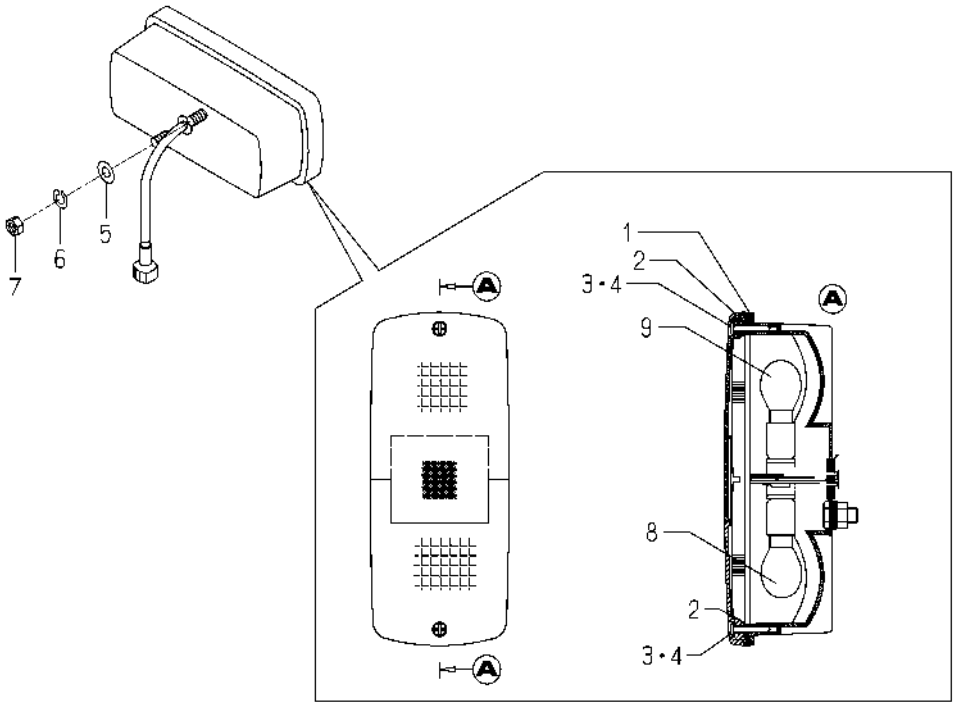

1772-654-210-0B

KEY	PART CODE	DESCRIPTION	SPC	TYPE OF MODEL SF224F	TYPE OF MODEL SF235F	ITC	COL	GRP	REMARKS
1	1772-654-212-00	GASKET	*	2	2				
2	1772-654-213-00	WASHER/RUBBER	*	4	4				
3	1772-654-214-00	SCREW	*	4	4				
4	1772-654-215-00	WASHER	*	4	4				
5	V411-260-008-00	WASHER,PL/M8	*	4	4				
6	V401-160-008-00	WASHER,SP/M8	*	4	4				
7	V304-260-008-00	NUT/M8	*	4	4				
8	1772-654-216-00	BULB/12V21W	*	2	2				
9	1772-654-217-00	BULB/12V21/5W	*	2	2				

FIG. 87 COMPONENT PARTS FOR 1825-127-300-00 ON Fig.26

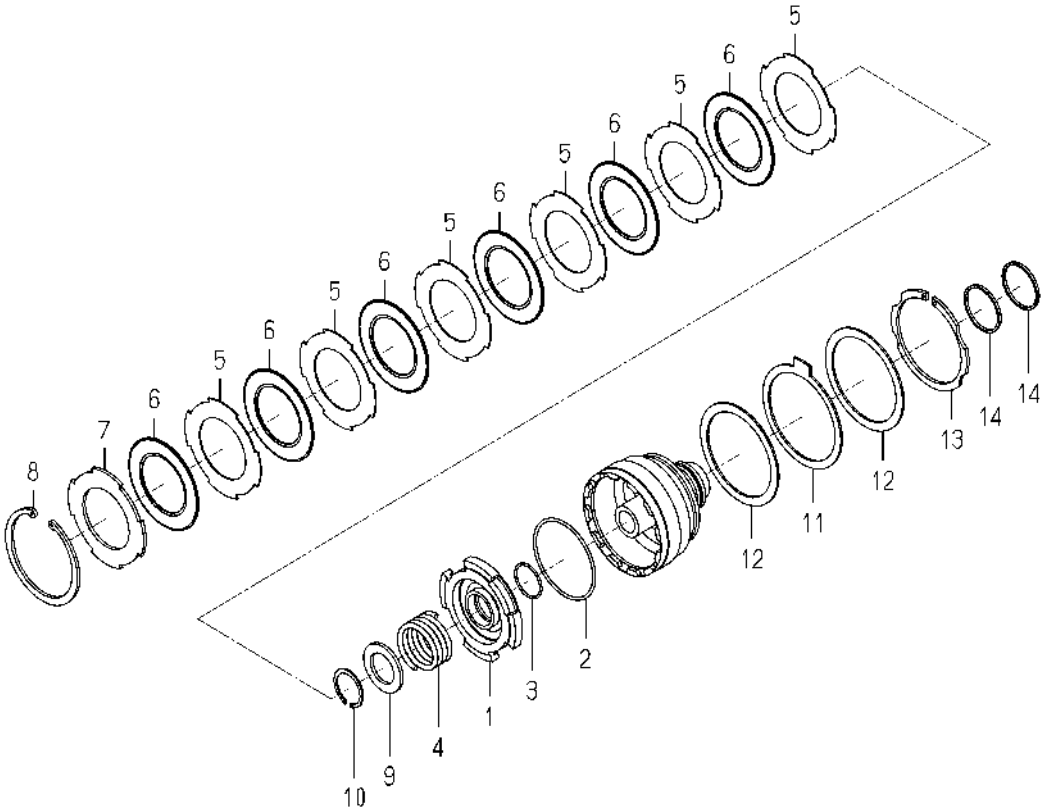

1825-127-300-0F

KEY	PART CODE	DESCRIPTION	SPC	TYPE OF MODEL SF224F	TYPE OF MODEL SF235F	ITC	COL	GRP	REMARKS
1	1825-127-302-00	PISTON	*	1	1				
2	1825-127-303-00	RING/O	*	1	1				
3	1825-127-304-00	RING/O	*	1	1				
4	1688-211-505-00	SPRING	*	1	1				
5	1725-219-232-00	PLATE/SEPARATER	*	6	6				
6	1725-219-215-00	PLATE/DISK	*	6	6				
7	1725-219-216-00	PLATE/BACK	*	1	1				
8	1688-211-506-00	SNAPRING	*	1	1				
9	1825-127-305-00	WASHER	*	1	1				
10	V704-140-030-00	RING,SNAP/30 C	*	1	1				
11	1688-211-509-00	DISK/BRAKE	*	1	1				
12	1825-127-307-00	PRESSURE/BRAKE	*	2	2				
13	1688-211-522-00	SNAPRING/85	*	1	1				
14	1825-127-306-00	SEAL/RING/45X03	*	2	2				

WIRING DIAGRAM (1/2)

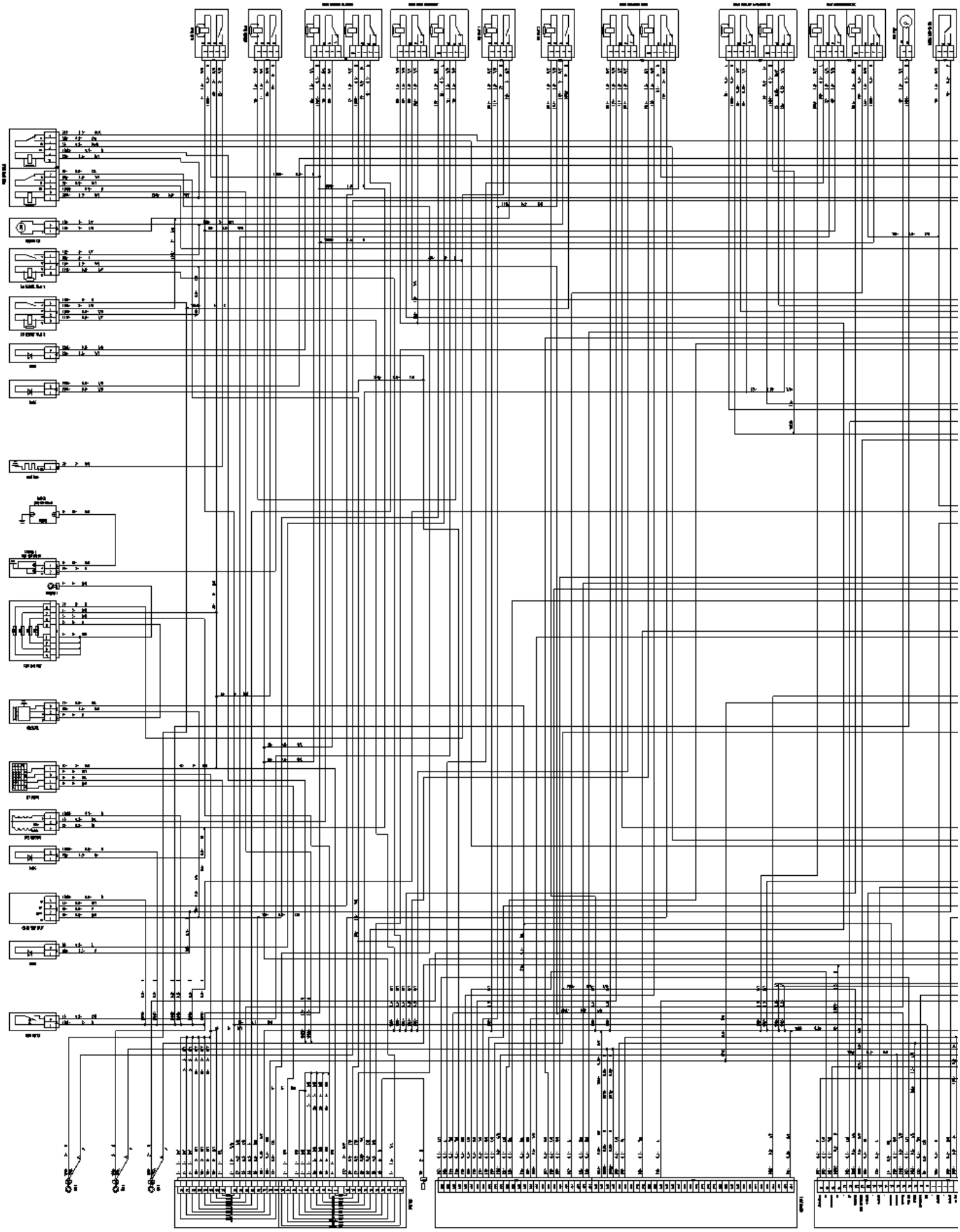

WIRING DIAGRAM (2/2)

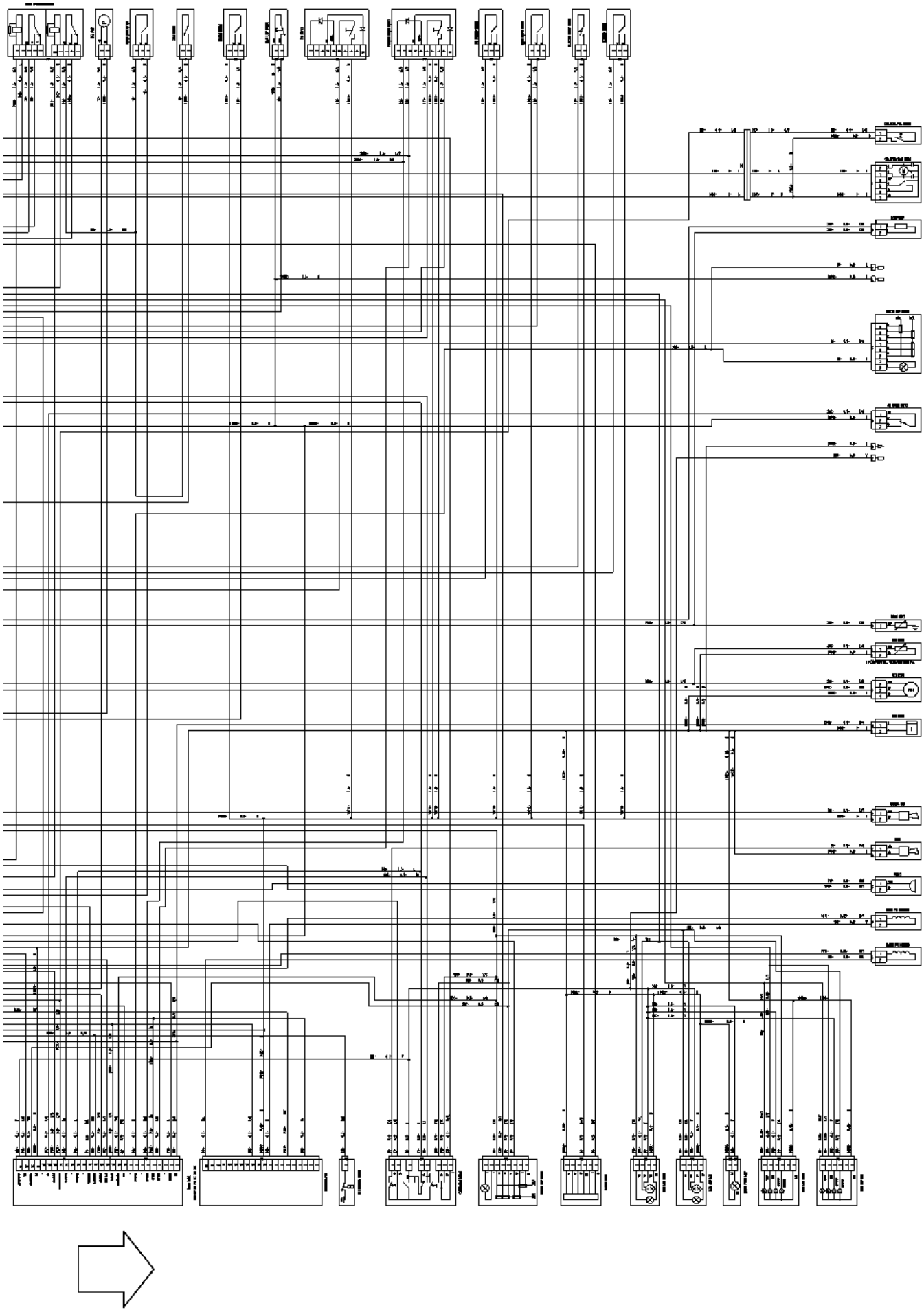

Numerical Index

Part Code	Fig.	Key	Part Code	Fig.	Key	Part Code	Fig.	Key
1373-121-001-00	24	4	6209-610-009-00	6	4	6211-511-023-00	6	11
1425-621-004-00	10	14	6209-625-001-00	6	14	6211-511-024-00	6	12
1729-202-001-00	21	14		27	10	6211-540-018-00	7	1
1729-202-002-00	10	44	6209-625-002-00	10	7	6211-560-007-00	7	3
3625-540-004-00	10	35		27	12	6211-599-012-00	6	13
3640-586-004-00	22	4	6209-630-002-10	25	7		7	2
3805-355-002-20	8	2		27	22		7	4
3817-401-001-00	10	10	6209-730-002-00	16	4	6211-751-001-10	3	2
	12	20	6209-730-005-00	13	3	6211-760-035-20	6	29
	18	7		21	12	6211-766-025-00	6	30
	18	12	6209-740-001-00	10	26	6211-777-007-30	11	1
	21	9	6209-740-005-00	6	17	6212-111-094-20	14	1
6004-010-170-00	1	1	6209-749-001-20	6	15	6212-114-094-20	15	1
6209-000-002-00	12	18		10	41	6212-116-094-20	15	3
6209-000-004-10	6	2	6209-920-002-00	10	20	6212-121-014-20	14	2
6209-000-043-00	16	9		17	12	6212-124-014-10	15	2
6209-000-044-00	2	7		27	13	6212-126-014-10	15	4
6209-030-043-00	21	18	6209-940-004-00	12	14	6212-211-001-10	14	3
6209-030-044-00	19	5	6211-110-057-50	2	1	6212-230-004-10	14	5
6209-046-015-00	16	7	6211-141-029-20	2	6	6212-235-005-00	14	6
6209-050-001-00	10	32		27	3	6212-271-016-00	14	7
6209-050-002-00	10	33	6211-170-004-20	3	1	6212-274-016-00	7	5
6209-300-014-00	2	8	6211-173-003-00	3	3	6212-276-016-00	7	6
6209-360-011-00	22	3		27	4	6212-310-019-60	16	1
6209-360-028-20	3	6	6211-210-113-10	6	1	6212-330-083-10	16	5
6209-360-143-00	22	6	6211-258-001-00	6	8	6212-333-009-00	16	6
6209-409-001-00	10	18		27	8	6212-371-081-00	16	8
6209-409-003-00	12	17	6211-258-002-00	6	9	6212-511-002-00	13	1
6209-440-005-00	25	4		27	9	6212-521-008-00	16	3
6209-440-007-00	24	6	6211-291-015-20	6	25	6212-522-010-00	13	2
6209-490-002-10	3	4	6211-292-001-20	6	26	6212-523-023-00	13	6
6209-500-003-00	10	16		27	11	6212-524-002-40	21	11
	10	25	6211-310-025-50	10	1	6212-530-022-00	10	43
	27	23	6211-311-007-40	10	36	6212-531-014-00	6	6
6209-572-003-00	3	5	6211-312-003-20	10	27	6212-535-010-10	21	15
	27	5		27	14	6212-535-014-00	13	4
6209-580-002-10	21	27	6211-312-004-20	10	37	6212-551-028-00	12	1
6209-587-001-00	14	4		27	15	6212-552-014-00	12	2
6209-600-004-00	10	24	6211-319-003-00	10	39	6212-561-001-10	12	3
6209-605-004-10	2	3	6211-321-022-00	10	47	6212-563-005-00	12	4
6209-605-007-10	6	5	6211-322-002-00	10	48	6212-565-001-00	12	5
	10	2	6211-340-006-10	9	1	6212-569-002-00	2	4
6209-610-001-10	6	3	6211-342-001-30	9	2		27	2
6209-610-007-00	10	3	6211-361-104-00	8	1	6212-571-006-00	12	6
6209-610-008-00	6	7	6211-510-021-00	6	10	6212-575-002-00	12	7

Numerical Index

Part Code	Fig.	Key	Part Code	Fig.	Key	Part Code	Fig.	Key
6212-600-002-30	12	8	6214-145-001-30	27	7	6215-345-036-00	28	42
6212-611-004-10	12	9	6215-300-036-10	20	1	6215-345-037-00	28	43
6212-616-002-00	12	16	6215-311-027-00	28	51	6215-345-038-00	28	44
6212-620-001-20	12	10	6215-315-002-00	20	3	6215-345-039-00	28	45
6212-626-002-10	12	11	6215-330-024-10	28	1	6215-345-040-00	28	46
6212-628-004-00	12	12	6215-331-008-00	28	2	6215-345-041-00	28	47
6212-628-005-00	12	13	6215-332-013-00	28	5	6215-345-042-00	28	48
6213-100-003-30	17	1	6215-339-001-00	28	6	6215-345-043-00	28	49
6213-111-001-30	17	2	6215-342-001-00	28	3	6215-359-001-00	20	2
6213-119-001-00	17	4	6215-343-001-00	28	4	6215-359-002-00	28	50
6213-129-003-00	17	3	6215-345-001-00	28	7	6215-411-126-10	20	4
6213-129-006-00	6	16	6215-345-002-00	28	8	6215-411-127-00	20	5
6213-140-032-10	17	6	6215-345-003-00	28	9	6215-411-128-00	20	6
6213-149-001-00	17	8	6215-345-004-00	28	10	6215-411-198-00	22	2
6213-160-002-20	10	28	6215-345-005-00	28	11	6215-412-004-00	22	1
6213-161-001-20	10	29	6215-345-006-00	28	12	6215-520-001-00	21	17
6213-164-001-00	10	30	6215-345-007-00	28	13	6215-526-004-00	21	19
6213-240-002-20	17	13	6215-345-008-00	28	14	6215-531-023-00	21	24
6213-311-006-00	17	10	6215-345-009-00	28	15	6215-541-001-10	21	20
6213-319-001-00	6	24	6215-345-010-00	28	16	6215-541-016-40	23	2
6213-610-005-50	18	1	6215-345-011-00	28	17	6215-541-024-50	21	25
6213-612-004-00	18	3	6215-345-012-00	28	18	6215-542-004-20	10	21
6213-613-002-10	18	2	6215-345-013-00	28	19	6215-542-005-20	10	23
6213-614-018-00	18	5	6215-345-014-00	28	20	6215-542-006-00	21	22
	27	18	6215-345-015-00	28	21	6215-543-002-10	21	21
6213-614-019-00	18	9	6215-345-016-00	28	22	6215-546-003-30	10	17
	27	19	6215-345-017-00	28	23	6215-548-029-20	23	1
6213-619-001-00	18	8	6215-345-018-00	28	24	6215-549-007-10	21	28
6213-619-003-00	18	4	6215-345-019-00	28	25	6215-549-012-00	21	32
6213-641-022-20	19	2	6215-345-020-00	28	26	6215-549-013-00	6	28
6213-660-023-00	19	1	6215-345-021-00	28	27	6215-600-103-30	21	1
6213-669-008-00	19	4	6215-345-022-00	28	28	6215-611-001-00	29	6
6213-669-022-00	19	3	6215-345-023-00	28	29	6215-612-001-00	29	9
6213-671-054-00	19	6	6215-345-024-00	28	30	6215-619-009-00	21	3
6213-674-046-00	24	2	6215-345-025-00	28	31	6215-619-010-00	21	2
6213-711-004-00	18	20	6215-345-026-00	28	32	6215-619-022-00	29	8
6213-716-001-60	18	15	6215-345-027-00	28	33	6215-621-016-30	21	10
6213-729-013-10	18	13	6215-345-028-00	28	34	6215-622-001-00	29	12
6213-743-002-10	18	16	6215-345-029-00	28	35	6215-629-001-00	29	10
	27	20	6215-345-030-00	28	36	6215-629-002-00	29	11
6214-111-011-20	4	1	6215-345-031-00	28	37	6215-629-003-00	29	18
6214-115-001-20	4	2	6215-345-032-00	28	38	6215-629-004-00	29	19
	27	6	6215-345-033-00	28	39	6215-629-005-00	29	20
6214-141-010-10	5	1	6215-345-034-00	28	40	6215-629-006-00	29	21
6214-145-001-30	5	2	6215-345-035-00	28	41	6215-629-007-00	29	22

Numerical Index

Part Code	Fig.	Key	Part Code	Fig.	Key	Part Code	Fig.	Key
6215-629-008-00	29	23	6281-229-015-00	30	22	V231-360-802-00	18	11
6215-629-009-00	29	24	6281-229-016-00	30	23		18	17
6215-629-010-00	29	25	6281-229-017-00	30	24		24	3
6215-629-011-00	29	26	6281-229-018-00	30	25	V231-360-802-50	18	22
6215-629-012-00	29	27	6281-229-032-00	30	6	V231-360-803-00	10	15
6215-629-013-00	29	28	6281-229-033-00	30	11	V231-360-804-50	10	12
6215-629-014-00	29	29	6281-229-040-00	30	14		18	6
6215-629-015-00	29	30	6281-271-003-00	26	1	V231-360-805-00	12	19
6215-629-016-00	29	31	6281-271-008-00	30	26	V231-360-805-50	10	9
6215-631-019-00	29	7	6281-410-023-10	25	3	V231-360-807-50	10	13
6215-634-001-00	29	16	6281-910-013-00	25	6		18	18
6215-635-001-00	29	14	6281-971-001-10	25	1	V231-360-808-50	10	8
6215-637-001-00	29	13	6282-450-011-00	25	2	V233-361-002-00	11	2
6215-639-004-00	29	15	6287-810-015-30	27	1	V233-361-007-00	24	5
6215-639-005-00	29	17	6294-453-002-00	6	21	V301-260-006-00	10	34
6215-641-006-00	29	5	6513-770-022-10	18	19		21	29
6215-643-006-00	29	1	6901-911-020-00	9	3	V304-260-008-00	10	45
6215-644-007-00	29	2	6901-911-025-00	24	8		10	49
6215-649-002-00	29	4	6902-050-816-00	10	38	V341-120-008-00	10	19
6215-649-019-00	29	3	6904-110-818-00	6	19	V401-160-006-00	21	31
6219-732-017-00	25	5	6904-110-822-00	6	20	V401-160-008-00	10	46
6219-752-044-00	21	5		10	4		10	50
6219-752-045-00	21	4		10	42	V411-260-006-00	21	30
6219-752-046-00	21	6	6904-110-840-00	6	18	V523-101-001-80	16	2
6219-752-047-00	21	7		18	10	V600-110-620-30	21	13
6281-100-023-00	24	7	6904-110-850-00	10	6	V682-200-000-60	2	5
6281-200-015-00	24	1	6904-110-855-00	10	5	V704-140-016-00	12	15
6281-213-013-00	30	7	6909-902-299-00	6	22	V705-140-012-00	10	31
6281-214-007-00	30	12	6909-906-105-10	17	11	V710-140-004-00	21	23
6281-214-008-00	30	13	6911-129-006-00	2	2	V720-101-900-80	21	26
6281-215-001-00	30	17	J061-210-015-00	18	14	V720-102-401-50	17	7
6281-216-001-00	30	18	J062-076-082-00	22	5		27	17
6281-217-002-00	30	16	P117-303-003-00	10	22	V720-102-401-80	8	3
6281-221-004-00	30	4	V201-360-802-00	21	8	V723-102-005-00	10	40
6281-222-002-00	30	1	V210-560-601-20	13	5		27	16
6281-229-002-00	30	2		21	16	V723-102-005-50	18	21
6281-229-003-00	30	3	V210-560-602-50	17	5		27	21
6281-229-004-00	30	5	V211-560-802-00	10	51	V782-160-000-4T	6	23
6281-229-006-00	30	8	V211-560-802-50	5	3			
6281-229-007-00	30	9	V230-360-601-00	8	4			
6281-229-008-00	30	10	V230-360-601-20	6	27			
6281-229-011-00	30	15	V230-360-601-60	25	8			
6281-229-012-00	30	19	V231-360-801-60	10	11			
6281-229-013-00	30	20		17	9			
6281-229-014-00	30	21	V231-360-802-00	4	3			

Numerical Index

Part Code	Fig.	Key	Part Code	Fig.	Key	Part Code	Fig.	Key
1373-121-001-00	24	4	6209-610-003-00	6	6	6211-341-126-00	9	1
1425-621-004-00	10	15	6209-610-004-00	10	3	6211-342-002-10	9	2
	17	16	6209-610-007-00	6	3	6211-361-076-00	8	1
1729-202-001-00	21	12	6209-610-009-00	6	5	6211-510-008-00	6	11
1729-202-002-00	10	45	6209-625-002-00	10	7	6211-511-007-00	6	12
3640-586-004-00	22	4		26	12	6211-511-008-00	6	13
3805-355-002-20	8	2	6209-625-003-20	6	15	6211-530-008-00	7	1
3817-401-001-00	10	11		26	10	6211-540-008-00	7	3
	12	20	6209-630-002-10	25	7	6211-599-004-00	6	14
	18	3		26	21		7	2
	18	9	6209-730-002-00	16	4		7	4
	21	7	6209-730-005-00	13	3	6211-751-001-10	3	5
6005-010-285-00	1	1		21	10	6211-751-002-00	6	31
6115-639-008-00	28	50	6209-740-005-00	6	18	6211-760-057-10	6	29
6209-000-005-00	2	7	6209-740-006-00	10	27	6211-766-025-00	6	30
6209-000-006-00	6	2	6209-740-008-00	6	35	6211-777-007-30	11	1
6209-000-043-00	16	9	6209-749-001-20	6	16	6212-111-095-40	14	1
6209-030-043-00	21	16		10	42	6212-114-095-40	15	1
6209-030-044-00	19	4	6209-920-002-00	10	21	6212-116-095-40	15	3
6209-030-091-00	9	3	6211-110-084-40	2	1	6212-121-028-30	14	2
6209-046-015-00	16	7	6211-141-057-10	2	6	6212-124-028-30	15	2
6209-050-001-00	10	34		26	3	6212-126-028-30	15	4
6209-050-002-00	10	35	6211-170-007-30	3	1	6212-211-002-00	14	3
6209-300-014-00	2	8	6211-173-005-00	3	6	6212-230-011-30	14	5
6209-360-011-00	22	3		26	4	6212-235-004-10	14	6
6209-360-109-10	3	9	6211-179-011-20	3	2	6212-251-003-30	26	22
6209-360-143-00	22	6	6211-210-116-00	6	1	6212-271-009-00	14	7
6209-360-145-00	17	14	6211-258-001-00	6	9	6212-273-009-00	7	5
6209-409-001-00	10	19		26	8	6212-274-009-00	7	6
6209-440-005-00	25	4	6211-258-002-00	6	10	6212-310-049-00	16	1
6209-440-007-00	24	6		26	9	6212-330-091-20	16	5
6209-490-002-10	3	7	6211-291-010-00	3	3	6212-333-007-10	16	6
6209-500-003-00	10	17	6211-291-015-20	6	25	6212-371-081-00	16	8
	10	26	6211-292-001-20	6	26	6212-511-005-10	13	1
	26	13		26	11	6212-521-008-00	16	3
6209-572-003-00	3	8	6211-299-012-00	6	37	6212-522-004-20	13	2
	26	5	6211-310-075-00	10	1	6212-523-006-50	13	6
6209-580-002-10	21	26	6211-311-013-20	10	37	6212-524-006-30	21	9
6209-600-004-00	10	25	6211-312-005-10	10	28	6212-530-022-00	10	44
6209-605-003-20	10	2		26	14	6212-531-008-30	6	8
6209-605-004-10	2	3	6211-312-006-10	10	38	6212-535-007-00	13	4
6209-605-007-10	6	7		26	15	6212-535-009-00	21	13
	6	36	6211-319-003-00	10	40	6212-551-020-10	12	1
6209-610-001-10	6	4	6211-321-022-00	10	48	6212-552-008-00	12	2
6209-610-003-00	2	2	6211-322-002-00	10	49	6212-561-003-00	12	3

Numerical Index

Part Code	Fig.	Key	Part Code	Fig.	Key	Part Code	Fig.	Key
6212-563-005-00	12	4	6213-743-002-10	18	13	6215-542-005-20	10	24
6212-565-001-00	12	5		26	19	6215-542-006-00	21	20
6212-569-002-00	2	4	6214-110-003-00	4	1	6215-543-002-10	21	19
	26	2	6214-115-003-10	4	2	6215-546-003-30	10	18
6212-571-002-30	12	6		26	6	6215-548-121-00	23	1
6212-575-003-00	12	7	6214-141-023-00	5	1	6215-549-013-00	6	28
6212-600-019-00	12	8	6214-145-004-20	5	2	6215-549-031-10	21	22
6212-611-014-00	12	9		26	7	6215-549-039-00	21	31
6212-620-017-00	12	10	6215-300-045-10	20	1	6215-549-076-10	21	27
6212-626-003-00	12	11	6215-311-036-00	27	16	6215-600-104-20	21	1
6212-628-022-00	12	12	6215-315-002-00	20	2	6215-619-023-00	28	49
6212-628-023-00	12	13	6215-315-005-00	20	4	6215-619-024-00	28	51
6212-629-006-00	12	14	6215-315-006-00	20	3	6215-621-017-10	21	8
6212-629-007-00	12	15	6215-315-007-00	20	5	6215-622-003-00	28	10
6212-629-008-00	12	16	6215-330-028-00	27	1	6215-629-017-00	28	11
6212-629-009-00	12	17	6215-332-014-00	27	15	6215-629-035-00	28	12
6212-629-010-00	12	18	6215-339-004-00	27	14	6215-629-036-00	28	24
6213-100-010-00	17	1	6215-342-013-00	27	13	6215-629-037-00	28	25
6213-119-001-00	17	3	6215-343-010-00	27	12	6215-629-038-00	28	26
6213-129-003-00	17	2	6215-345-044-00	27	2	6215-629-039-00	28	27
6213-129-006-00	6	17	6215-345-045-00	27	3	6215-629-040-00	28	28
6213-140-005-20	17	5	6215-345-046-00	27	4	6215-629-041-00	28	29
6213-149-003-20	17	7	6215-345-047-00	27	5	6215-629-042-00	28	30
6213-160-005-00	10	29	6215-345-048-00	27	6	6215-629-043-00	28	31
6213-161-003-10	10	30	6215-345-049-00	27	7	6215-629-044-00	28	32
6213-164-001-00	10	31	6215-345-050-00	27	8	6215-629-045-00	28	33
6213-240-011-00	17	9	6215-345-051-00	27	9	6215-629-046-00	28	34
6213-342-007-00	6	34	6215-345-052-00	27	10	6215-629-047-00	28	35
6213-342-013-00	6	33	6215-345-053-00	27	11	6215-629-048-00	28	36
6213-610-011-20	18	1	6215-359-003-00	27	17	6215-629-049-00	28	37
6213-614-001-10	26	18	6215-359-004-00	27	18	6215-629-050-00	28	38
6213-614-013-00	18	2	6215-359-006-00	28	52	6215-629-051-00	28	39
6213-614-014-00	18	5	6215-411-133-00	20	6	6215-629-052-00	28	40
6213-619-006-00	18	4	6215-411-134-00	20	7	6215-629-053-00	28	41
6213-641-022-20	19	2	6215-411-135-00	20	8	6215-629-054-00	28	42
6213-660-023-00	19	1	6215-411-136-00	22	2	6215-629-055-00	28	43
6213-669-008-00	19	3	6215-412-004-00	22	1	6215-629-056-00	28	44
6213-671-058-00	19	5	6215-520-007-10	21	15	6215-629-058-00	28	45
6213-674-012-20	24	2	6215-526-004-00	21	17	6215-629-059-00	28	46
6213-711-004-00	18	17	6215-531-019-00	21	23	6215-629-060-00	28	16
6213-716-001-60	18	12	6215-537-002-10	21	32	6215-629-061-00	28	17
6213-721-015-00	6	24	6215-541-001-10	21	18	6215-629-062-00	28	18
6213-721-023-00	3	10	6215-541-016-40	23	2	6215-629-063-00	28	19
6213-729-026-00	17	13	6215-541-045-10	21	24	6215-629-064-00	28	20
6213-729-031-00	18	10	6215-542-004-20	10	22	6215-629-065-00	28	21

Numerical Index

Part Code	Fig.	Key	Part Code	Fig.	Key	Part Code	Fig.	Key
6215-629-066-00	28	22	6281-214-007-00	30	12	6904-110-855-00	10	5
6215-629-067-00	28	23	6281-214-008-00	30	13	6909-111-508-00	29	21
6215-631-015-00	28	1	6281-215-001-00	30	17	6909-950-115-00	14	4
6215-634-003-00	28	13	6281-216-001-00	30	18	J061-210-015-00	18	11
6215-635-004-00	28	7	6281-217-002-00	30	16	J061-216-020-00	17	15
6215-635-005-00	28	48	6281-221-004-00	30	4	J062-076-082-00	22	5
6215-637-004-00	28	47	6281-222-002-00	30	1	P117-303-003-00	10	23
6215-639-008-00	28	14	6281-229-002-00	30	2	V195-164-008-30	3	4
6215-639-009-00	28	15	6281-229-003-00	30	3	V210-560-601-20	13	5
6215-641-002-00	28	2	6281-229-004-00	30	5		21	14
6215-643-005-00	28	3	6281-229-006-00	30	8	V211-560-802-00	10	52
6215-644-009-00	28	5	6281-229-007-00	30	9	V211-560-802-50	5	3
6215-649-008-00	28	4	6281-229-008-00	30	10	V220-540-602-00	17	4
6215-649-011-00	28	9	6281-229-011-00	30	15	V230-360-601-00	8	4
6215-649-013-00	28	8	6281-229-012-00	30	19	V230-360-601-20	6	27
6215-649-014-00	28	6	6281-229-013-00	30	20	V230-360-601-60	25	8
6219-732-017-00	25	5	6281-229-014-00	30	21	V231-360-801-60	10	12
6219-752-044-00	21	3	6281-229-015-00	30	22		17	8
6219-752-045-00	21	2	6281-229-016-00	30	23	V231-360-802-00	18	8
6219-752-046-00	21	4	6281-229-017-00	30	24		18	14
6219-752-047-00	21	5	6281-229-018-00	30	25		21	6
6221-700-007-00	17	10	6281-229-032-00	30	6		24	3
6221-726-010-00	17	12	6281-229-033-00	30	11	V231-360-802-50	4	3
6221-726-015-00	17	11	6281-229-040-00	30	14		18	19
6281-100-002-50	24	7	6281-229-041-00	29	22	V231-360-803-00	10	16
6281-111-005-00	29	1	6281-271-008-00	30	26	V231-360-804-50	18	7
6281-115-008-00	29	10	6281-410-023-10	25	3	V231-360-805-00	10	13
6281-115-010-00	29	23	6281-910-013-00	25	6	V231-360-805-50	12	19
6281-115-016-00	29	20	6281-971-001-10	25	1	V231-360-806-00	10	14
6281-116-004-00	29	11	6282-450-011-00	25	2	V231-360-807-00	10	10
6281-121-006-00	29	2	6287-810-032-10	26	1	V231-360-807-50	10	9
6281-123-005-00	29	8	6294-453-002-00	6	22		18	15
6281-124-007-10	29	5	6513-770-022-10	18	16	V231-360-808-50	10	8
6281-129-003-00	29	19	6581-117-007-00	29	12	V233-361-002-00	11	3
6281-129-038-00	29	3	6581-129-092-00	29	17	V233-361-007-00	24	5
6281-129-039-00	29	4	6581-129-099-00	29	6	V251-340-806-00	6	21
6281-129-040-00	29	7	6901-911-020-00	11	2	V301-260-006-00	10	36
6281-129-041-10	29	9	6901-931-240-00	24	8		21	28
6281-129-042-00	29	15	6902-050-816-00	10	39	V304-260-008-00	10	46
6281-129-043-00	29	16	6904-110-822-00	6	20		10	50
6281-129-044-00	29	18		10	4	V304-260-012-00	24	9
6281-129-062-00	29	14		10	43	V341-120-008-00	10	20
6281-151-025-10	29	13	6904-110-840-00	6	19	V401-160-006-00	21	30
6281-200-015-00	24	1		18	6	V401-160-008-00	10	47
6281-213-013-00	30	7	6904-110-850-00	10	6		10	51

Numerical Index

6005-097-245-00

Part Code	Fig.	Key	Part Code	Fig.	Key	Part Code	Fig.	Key
V411-260-006-00	21	29						
V523-101-001-80	16	2						
V600-110-620-30	21	11						
V682-200-000-60	2	5						
V705-140-012-00	10	32						
V710-140-004-00	21	21						
V720-101-900-80	21	25						
V720-102-401-80	8	3						
	10	33						
V720-103-502-20	17	6						
	26	17						
V720-103-502-50	6	32						
V723-102-005-00	10	41						
	26	16						
V723-102-005-50	18	18						
	26	20						
V782-160-000-4T	6	23						

Numerical Index

Part Code	Fig.	Key	Part Code	Fig.	Key	Part Code	Fig.	Key
1102-611-006-10	60	7	1560-240-007-40	16	6	1672-301-002-00	21	2
1118-606-002-10	72	10	1560-531-020-00	48	27	1672-301-003-00	21	8
1342-402-006-00	67	19	1560-630-024-00	71	12	1672-301-004-00	21	10
1376-402-003-00	67	20	1560-666-004-00	63	23	1673-431-001-10	26	22
1376-606-005-00	60	3	1560-695-021-00	30	18	1673-525-002-30	71	7
1404-503-006-00	54	13	1560-695-022-00	30	22	1674-619-300-10	63	15
1415-102-007-00	83	1	1564-216-004-10	20	4		64	15
1415-102-008-00	83	3	1572-102-003-00	83	8	1674-619-310-00	63	16
1415-102-013-00	83	9	1575-261-018-00	27	8		64	16
1416-621-037-00	10	5		28	8	1674-654-270-00	63	26
1421-602-005-10	72	5	1575-616-005-00	70	4		64	25
1421-603-004-00	3	19	1593-117-003-10	13	5	1674-654-271-00	63	27
	4	19	1600-505-007-10	13	4		64	26
1423-616-004-00	3	22	1600-624-004-10	67	21	1674-654-272-00	63	28
	4	22	1614-129-003-00	66	44		64	27
1425-433-018-00	25	5	1614-203-015-00	20	2	1674-904-005-10	76	11
1427-301-002-20	21	6	1614-222-007-00	26	16		77	11
1427-301-005-00	21	9	1614-223-221-00	19	2	1674-904-008-00	76	5
1427-301-007-00	21	11	1614-702-551-20	71	8		77	5
1427-310-001-00	34	6	1614-702-552-00	71	9	1675-112-002-00	11	2
1427-310-220-10	34	7	1614-922-200-20	81	1		12	4
1432-616-002-00	60	9	1620-410-001-10	80	1	1675-116-001-00	13	11
1434-310-220-00	34	5	1632-273-200-00	27	17	1675-506-002-00	55	46
1440-103-201-00	83	4		28	17	1683-271-560-00	30	20
1442-313-202-00	36	2	1636-436-002-00	79	2	1684-112-230-00	12	1
1444-102-204-00	83	5	1636-611-011-00	62	4	1685-604-003-00	3	30
1444-122-002-00	35	35	1636-631-008-00	69	4		4	30
1444-307-007-00	52	17	1646-111-210-20	9	13		44	15
	52	28	1646-226-053-00	30	2		45	15
	52	39	1646-640-580-00	30	33	1688-211-057-00	27	9
1444-314-008-00	20	15	1650-104-200-10	7	1		28	9
1444-314-009-10	29	5		8	1	1688-211-505-00	87	4
1444-328-272-00	36	4	1650-104-201-00	7	3	1688-211-506-00	87	8
1444-328-273-00	36	3		8	3	1688-211-509-00	87	11
1444-411-006-00	21	7	1650-104-203-10	7	4	1688-211-522-00	87	13
1480-207-011-00	33	20		8	4	1689-205-005-10	22	3
1518-306-203-10	49	58	1650-104-210-00	7	2	1689-271-006-00	30	3
1518-432-250-10	49	57		8	2	1689-272-240-00	31	15
1524-122-001-10	35	8	1650-135-002-00	35	6	1689-272-260-00	31	1
1544-104-205-00	7	5	1650-509-280-00	55	44	1689-613-260-00	65	2
	8	5	1650-509-310-00	56	19	1690-102-210-00	3	31
1544-120-008-10	16	8	1650-650-222-00	67	5		4	31
1544-304-006-10	21	5	1659-650-200-20	11	1	1690-102-212-00	3	32
1560-132-007-30	30	21	1672-105-210-10	9	1		4	32
	35	36	1672-105-211-00	83	7	1690-102-213-00	3	33

Numerical Index

Part Code	Fig.	Key
1690-102-213-00	4	33
1690-102-214-00	3	34
	4	34
1690-102-215-00	3	35
	4	35
1690-102-216-00	3	36
	4	36
1690-102-217-00	3	37
	4	37
1690-241-003-00	16	5
1690-650-320-00	66	19
1696-901-006-00	73	6
	74	6
1703-670-320-00	65	3
1703-670-322-00	65	4
1703-670-323-00	65	5
1703-670-324-00	65	6
1703-670-325-00	65	7
1703-670-326-00	65	8
1704-740-008-10	60	5
1705-408-230-00	54	15
	55	12
	55	55
1705-902-006-00	76	6
	77	6
1705-902-007-00	76	8
	77	8
1705-902-008-00	76	7
	77	7
1705-904-002-10	76	2
	77	2
1705-904-004-00	76	1
	77	1
1705-904-011-00	77	14
1710-241-053-00	33	16
	82	25
1716-105-001-00	9	7
1716-501-006-10	16	9
	16	13
1716-601-009-00	3	21
	4	21
1716-680-222-00	66	29
	66	33
	66	39
	66	47
1716-680-330-10	66	28
	66	32
	66	38
	66	46
1716-901-016-00	73	4
	74	4
1719-312-001-00	3	24
	4	24
	46	9
1719-650-250-00	66	1
	66	3
	66	11
1720-221-210-00	48	13
1720-221-211-00	84	1
1720-221-212-00	84	2
1720-221-213-00	84	3
1720-221-214-00	84	4
1720-221-215-00	84	5
1720-221-216-00	84	6
1720-221-217-00	84	7
1720-221-218-00	84	8
1720-221-219-00	84	9
1720-221-221-00	84	10
1720-221-222-00	84	11
1720-221-224-00	84	12
1720-221-225-00	84	13
1720-221-230-00	48	14
1724-102-012-00	3	29
	4	29
1724-304-005-00	20	13
1725-103-002-00	5	7
	6	7
1725-105-330-10	9	11
1725-201-806-00	49	32
	49	51
1725-218-109-00	49	4
1725-219-121-00	49	6
	49	39
	49	43
1725-219-122-00	49	46
1725-219-215-00	87	6
1725-219-216-00	87	7
1725-219-232-00	87	5
1725-219-720-20	27	6
	28	6
1725-219-722-00	85	1
1725-219-723-10	85	2
1725-219-724-00	85	3
1725-219-725-00	85	4
1725-219-726-00	85	5
1725-219-727-00	85	6
1725-219-728-00	85	7
1725-219-729-00	85	8
1725-219-731-00	85	9
1725-219-732-00	85	10
1725-219-733-00	85	11
1725-219-734-00	85	12
1725-304-713-00	49	23
	49	27
1725-308-103-00	49	30
	49	37
1725-432-101-00	49	1
1725-432-107-00	49	5
1725-432-108-00	49	16
1725-432-110-00	49	3
1725-432-113-00	49	15
1725-432-114-00	49	17
	49	36
1725-432-711-00	49	8
1725-432-712-10	49	9
1725-432-713-00	49	10
1725-432-714-00	49	11
1725-432-715-00	49	12
1725-432-801-00	49	14
1725-433-202-10	31	11
	31	27
	35	31
	36	14
	49	19
1725-434-005-00	49	33
1725-434-013-00	49	50
1725-434-047-00	49	34
1725-434-101-00	49	20
1725-434-106-00	49	47
1725-434-107-00	49	48
1725-434-108-00	49	53
1725-434-111-00	49	24
1725-434-113-00	49	45
1725-434-114-00	49	21
	49	25

Numerical Index

Part Code	Fig.	Key	Part Code	Fig.	Key	Part Code	Fig.	Key
1725-434-115-00	49	22	1729-509-001-00	55	34	1770-621-530-00	65	19
	49	26	1729-601-280-10	58	9	1770-902-004-00	75	2
1725-434-116-00	49	29	1729-602-006-00	3	43	1770-902-051-00	75	1
	49	52		4	43	1771-105-001-00	9	5
1725-434-121-00	49	42	1729-604-003-00	3	28	1771-215-001-00	22	6
1725-434-122-00	49	40		4	28	1771-215-210-00	22	2
	49	44	1729-702-003-00	57	12	1771-244-011-10	26	24
1725-434-123-00	49	49	1729-705-009-00	65	24	1771-246-052-00	29	3
1725-434-124-00	49	54	1729-741-007-00	60	2	1771-307-051-20	33	1
1725-436-320-00	50	2	1739-401-001-00	40	5	1771-407-001-10	40	2
1725-436-600-00	50	1	1739-401-700-00	38	1	1771-407-200-00	40	1
1725-436-601-00	50	6	1739-407-074-00	40	3	1771-503-003-00	52	7
1725-436-610-00	50	3	1739-530-270-00	56	24	1771-510-250-00	56	3
1725-436-611-00	50	4	1739-681-220-20	66	15	1771-510-251-00	56	4
1725-436-612-00	50	5	1739-904-001-00	76	4	1771-923-200-10	79	1
1725-509-260-00	55	7		77	4	1771-923-210-00	79	6
1725-611-087-00	63	3	1739-904-004-00	76	3	1772-652-001-00	65	27
	64	3		77	3	1772-652-220-10	65	26
1725-680-220-10	66	43	1740-313-300-10	36	1	1772-654-001-00	63	21
1725-690-071-00	67	14	1740-313-301-00	36	5		64	21
1728-102-220-00	3	12	1740-407-530-00	55	52	1772-654-002-10	63	22
	4	12	1740-517-600-00	56	15		64	22
1728-204-002-00	22	1	1740-517-610-00	56	22	1772-654-210-00	63	20
1728-204-073-30	22	5	1740-680-530-20	66	17		64	20
1728-307-024-00	33	9	1741-604-012-00	44	5	1772-654-212-00	86	1
1728-307-025-00	33	12		45	5	1772-654-213-00	86	2
1728-307-026-10	33	14	1742-504-004-00	35	33	1772-654-214-00	86	3
1728-310-052-00	34	2	1742-606-001-10	70	5	1772-654-215-00	86	4
1728-317-251-00	37	2	1742-662-001-00	69	8	1772-654-216-00	63	7
1728-407-076-10	40	6	1746-902-004-00	65	18		63	12
1728-408-001-00	41	15	1747-640-067-00	31	2		64	7
1728-441-701-10	51	2	1752-102-005-00	3	20		64	12
1728-508-280-10	55	1		4	20		86	8
1729-111-006-10	10	7	1752-508-005-00	54	6	1772-654-217-00	86	9
1729-111-283-00	10	9	1752-606-004-00	58	8	1772-654-250-10	66	23
1729-111-284-00	10	10	1754-407-001-00	56	7	1772-654-251-00	66	24
1729-202-002-00	27	5	1755-111-300-00	10	4	1772-654-280-10	66	25
	27	10	1757-901-011-00	75	3	1772-654-281-00	66	26
	28	5	1763-601-003-00	44	3	1772-654-282-00	66	27
	28	10		45	3	1773-267-002-00	47	7
1729-202-003-00	18	7	1764-603-002-00	46	2	1773-401-202-10	38	2
1729-202-005-00	33	11		46	5	1773-434-012-00	49	2
1729-202-007-00	27	15	1770-102-004-00	3	3	1773-702-001-00	71	3
	28	15		4	3	1773-702-002-00	71	11
1729-202-014-00	26	27	1770-111-004-00	10	12	1774-111-310-10	10	8

Numerical Index

Part Code	Fig.	Key	Part Code	Fig.	Key	Part Code	Fig.	Key
1774-111-311-00	10	11	1809-553-240-20	57	3	1832-102-051-00	4	8
1774-272-071-00	31	16	1809-553-280-00	53	8	1832-102-052-00	4	9
1774-650-212-00	63	6		57	5	1832-102-210-20	3	16
	63	11	1809-603-001-00	59	1		4	16
	64	6	1809-603-002-00	59	2	1832-102-220-00	3	2
	64	11	1809-606-002-00	60	6		4	2
1774-680-250-00	66	13	1809-650-006-00	63	4	1832-102-230-10	3	26
1774-904-031-10	77	13		64	4		4	26
1774-904-032-00	76	13	1809-650-012-00	63	30	1832-102-240-00	3	38
1776-432-003-00	49	7	1809-650-230-00	63	5		4	38
1782-103-051-00	5	8		64	5	1832-102-310-00	3	6
	6	8	1809-650-232-00	63	8	1832-102-320-00	4	6
1796-604-073-00	3	44		63	13	1832-102-330-00	3	1
	4	44		64	8		4	1
1800-652-400-00	66	5		64	13	1832-103-003-00	5	2
	66	6	1809-650-233-00	63	9		6	2
	66	7		63	14	1832-103-210-10	5	5
	66	8		64	9	1832-103-300-00	5	1
	66	9		64	14	1832-103-500-00	6	1
	66	10	1809-650-240-00	63	10	1832-103-510-10	6	5
1801-509-530-00	56	11		64	10	1832-104-001-00	7	7
1805-202-025-00	21	12	1809-670-220-00	65	9	1832-104-002-00	7	9
1805-508-260-00	54	1	1809-690-204-00	67	12		8	10
1806-102-008-00	44	10	1809-690-205-00	67	15	1832-104-051-00	8	7
	45	10	1809-801-002-10	72	8	1832-105-001-00	9	15
1809-102-027-00	3	4	1809-801-004-00	72	16	1832-111-001-00	10	1
	4	4	1809-801-007-00	72	17	1832-112-001-10	11	3
1809-102-330-00	3	14	1809-801-280-00	66	40		12	5
	4	14	1817-904-004-00	76	12	1832-112-051-00	12	2
1809-111-002-00	10	3		77	12	1832-112-210-00	11	8
1809-112-210-00	11	6	1825-127-300-00	26	6	1832-112-510-00	12	10
1809-117-002-00	13	2	1825-127-302-00	87	1	1832-112-520-00	12	8
1809-405-003-00	39	4	1825-127-303-00	87	2	1832-117-210-00	13	1
1809-405-004-20	39	10	1825-127-304-00	87	3	1832-117-220-00	13	3
1809-405-008-00	39	13	1825-127-305-00	87	9	1832-117-230-00	13	8
1809-408-260-10	41	16	1825-127-306-00	87	14	1832-118-210-10	14	1
1809-410-001-00	58	7	1825-127-307-00	87	12	1832-120-210-00	15	1
1809-503-003-00	52	15	1832-101-210-00	1	1	1832-201-001-00	16	1
	52	26	1832-101-220-00	1	2	1832-201-002-00	16	2
	52	37	1832-101-510-00	2	1	1832-201-210-00	16	11
1809-503-220-10	52	11	1832-101-520-00	2	2	1832-203-001-00	17	1
1809-509-006-00	55	47	1832-102-001-00	3	42	1832-204-001-00	18	1
1809-509-450-00	55	54		4	42	1832-204-002-00	18	4
1809-553-210-20	57	1	1832-102-004-00	3	8		26	1
1809-553-230-00	57	7	1832-102-005-00	3	9	1832-204-003-00	18	6

Numerical Index

Part Code	Fig.	Key	Part Code	Fig.	Key	Part Code	Fig.	Key
1832-213-001-00	20	6	1832-306-002-00	32	3	1832-411-002-10	44	13
1832-213-002-00	20	3	1832-306-210-00	32	12		45	13
1832-213-210-00	20	9	1832-307-001-00	33	5	1832-411-003-00	44	16
1832-213-900-00	20	1	1832-307-002-00	33	13		45	16
1832-214-001-00	21	1	1832-307-210-00	33	19	1832-411-004-00	44	18
1832-214-002-00	21	13	1832-310-001-00	34	1		45	18
1832-216-210-10	23	1	1832-310-210-00	34	4	1832-411-005-00	44	20
1832-216-220-00	23	6	1832-310-220-00	34	8	1832-411-006-00	45	20
1832-241-001-00	24	1	1832-312-002-00	35	18	1832-411-007-00	44	7
	25	1	1832-312-003-00	35	30		45	7
1832-244-001-00	26	3	1832-312-210-00	35	7	1832-411-240-20	44	1
1832-244-002-00	26	11	1832-312-220-00	35	1		45	1
1832-244-003-00	26	21	1832-312-230-00	35	13	1832-411-250-20	44	8
1832-244-004-00	26	18	1832-312-240-10	35	21		45	8
1832-244-005-00	26	13	1832-312-260-00	35	28	1832-411-260-10	44	2
1832-244-006-00	26	26		36	11		45	2
1832-244-007-00	26	28	1832-312-270-00	35	24	1832-412-001-00	46	7
1832-244-200-00	26	7	1832-312-280-00	35	10	1832-412-002-00	46	8
1832-244-230-00	26	23	1832-313-001-10	36	16	1832-412-210-10	46	1
1832-245-001-00	27	4	1832-313-210-00	36	7	1832-412-230-10	46	4
	28	4	1832-313-220-00	36	10	1832-430-001-00	47	6
1832-245-200-00	27	1	1832-313-230-00	36	13	1832-430-210-00	47	1
	28	1	1832-317-200-00	37	1	1832-430-220-00	47	3
1832-245-210-00	27	7	1832-317-230-00	37	3	1832-430-230-00	47	11
1832-245-220-00	27	13	1832-405-001-00	39	12	1832-431-001-00	48	15
1832-245-500-00	28	7	1832-405-210-00	39	1	1832-431-002-00	48	19
1832-245-510-00	28	13	1832-405-230-00	39	3	1832-431-003-00	48	3
1832-246-210-00	29	1	1832-405-240-00	39	5	1832-431-004-00	48	8
1832-271-001-00	30	29	1832-405-250-00	39	11	1832-431-005-00	48	9
1832-271-002-00	30	16	1832-405-260-00	39	7	1832-431-006-00	48	12
1832-271-210-00	30	1	1832-408-001-00	41	12	1832-431-007-00	48	25
1832-271-230-00	30	9	1832-410-001-00	42	19	1832-431-210-00	48	1
1832-271-240-00	30	7	1832-410-002-00	42	20	1832-431-220-00	48	23
1832-271-250-00	30	25	1832-410-210-10	42	6	1832-431-230-10	48	30
1832-271-260-00	30	11		43	6	1832-433-200-00	49	18
1832-272-001-10	31	7	1832-410-250-10	42	13	1832-433-250-00	49	60
	31	23		43	13	1832-434-001-00	49	28
1832-272-003-00	31	12	1832-410-310-10	42	1	1832-434-002-00	49	31
	31	28		43	1	1832-434-003-00	49	56
1832-272-210-00	31	4	1832-410-410-10	42	9	1832-434-004-00	49	55
1832-272-220-10	31	18		43	9	1832-434-101-00	49	41
1832-272-250-00	31	31	1832-410-450-10	42	17	1832-434-102-00	49	38
1832-272-260-10	31	10		43	17	1832-441-001-00	51	6
1832-272-270-10	31	26	1832-411-001-10	44	11	1832-441-200-00	51	1
1832-306-001-00	32	1		45	11	1832-441-230-00	51	3

Numerical Index

Part Code	Fig.	Key	Part Code	Fig.	Key	Part Code	Fig.	Key
1832-503-001-00	52	18	1832-670-201-00	65	22	2500-901-027-00	78	1
1832-503-002-00	52	29	1832-670-202-00	65	23	2504-135-008-10	30	12
	52	40	1832-670-210-10	65	1		30	26
1832-503-003-00	52	4	1832-670-310-00	65	11	2508-350-007-10	3	39
1832-503-004-00	52	43	1832-670-320-00	65	12		4	39
1832-503-210-00	52	3	1832-670-330-00	65	13	2514-102-008-00	3	40
1832-503-220-00	52	10	1832-670-340-00	65	14		4	40
1832-503-230-00	52	21	1832-680-230-00	66	31	2514-201-011-00	15	2
1832-503-240-00	52	32	1832-690-200-10	67	1	2515-665-210-00	66	21
1832-503-250-00	52	1	1832-690-202-00	67	2	2521-730-025-00	44	4
1832-503-270-10	52	22	1832-690-203-00	67	3		45	4
	52	33	1832-690-210-00	68	1	3104-210-004-10	35	37
1832-503-280-00	52	46	1832-695-001-00	69	10	3504-418-007-10	30	30
1832-504-210-00	53	10	1832-695-200-00	69	5	3533-901-012-00	73	5
1832-508-210-00	54	3	1832-695-210-20	69	1		74	5
1832-508-220-00	53	11	1832-695-250-00	69	7	3621-702-003-00	72	18
	54	17	1832-701-210-10	70	1		79	5
1832-509-002-00	55	33	1832-701-230-10	70	8	3623-150-003-10	1	4
1832-509-003-00	55	16	1832-702-002-00	71	2		2	4
1832-509-230-00	55	30	1832-702-210-00	71	1	3623-263-001-00	1	8
1832-509-240-00	55	51	1832-702-250-00	71	5		2	8
1832-509-270-00	55	27	1832-702-251-00	71	6	3626-370-005-00	54	9
1832-509-280-00	55	6	1832-801-210-00	72	1	3640-547-007-00	82	27
1832-509-290-00	55	15	1832-801-220-10	72	3	3642-496-007-10	66	45
1832-509-310-00	55	50	1832-801-230-00	72	7	3650-261-001-00	41	17
1832-509-320-00	55	14	1832-801-250-00	72	14	3650-262-202-00	67	13
1832-509-330-00	55	11	1832-901-001-00	73	1	3650-270-214-00	65	20
	56	2		74	1	3656-202-006-10	3	45
	56	8	1832-901-002-00	73	2		4	45
1832-510-001-00	56	25		74	2	3666-202-005-10	9	16
1832-510-220-00	56	21	1832-901-003-00	73	3		69	2
1832-601-001-00	58	5	1832-901-013-00	74	3	3670-236-003-00	58	3
1832-601-002-00	58	6	1832-902-001-10	75	4	3676-356-001-00	16	16
1832-601-210-00	58	1	1832-902-002-00	75	5	3768-185-022-10	53	7
1832-603-001-00	59	4	1836-432-204-00	49	35	3814-354-015-10	54	14
1832-606-001-00	60	1	2144-419-022-00	30	13	3814-371-004-00	56	5
1832-606-002-00	60	8		30	27	3817-116-005-00	20	7
1832-611-210-10	61	1	2144-519-009-10	35	38	3821-262-202-00	67	7
1832-630-001-00	62	1	2145-586-002-00	52	12	3821-262-203-00	67	8
1832-630-002-00	62	3		52	23	3821-262-204-00	67	9
1832-650-001-00	63	32		52	34	3821-262-209-00	67	10
1832-650-210-00	63	1	2186-536-212-00	65	17	3824-232-021-00	59	3
	64	1	2213-312-013-00	15	3	3824-247-202-00	67	6
1832-650-310-00	63	18		48	2	3824-247-204-00	67	11
	64	18	2500-210-016-00	30	15	3829-248-003-00	70	6

Numerical Index

Part Code	Fig.	Key	Part Code	Fig.	Key	Part Code	Fig.	Key
3829-260-303-00	67	4	J061-116-025-00	54	7	K500-007-039-00	82	41
3829-282-610-00	66	36	J061-230-038-00	3	11	K500-008-000-00	19	1
3829-311-200-10	9	9		4	11	K500-008-001-00	82	1
3829-387-410-00	55	9	J061-236-044-00	3	10	K500-008-004-00	82	2
	55	48		4	10	K500-008-012-00	82	7
3843-261-200-20	65	15	J061-247-055-00	8	9	K500-008-013-00	82	8
3843-261-201-00	65	16	J061-252-063-00	7	8	K500-008-023-00	82	18
	65	25		7	10	K500-008-026-00	82	19
3864-351-200-00	54	10		8	8	K500-008-034-00	82	29
4101-102-038-00	3	25		8	11	K500-008-035-00	82	30
	4	25	J062-087-093-00	9	14	K500-008-100-00	82	34
4335-512-004-00	63	29	J062-111-120-00	9	12	K510-001-010-00	82	5
	64	28	J062-119-126-00	9	6	K510-001-011-00	82	6
6901-911-020-00	2	3		9	8	K510-001-016-00	82	11
6901-931-225-00	1	3	J062-138-148-00	16	10	K510-001-020-00	82	13
	42	3		16	14	K510-001-029-00	82	20
	42	7	J062-147-159-00	3	13	K510-001-036-00	82	32
	42	16		4	13	K510-001-039-00	82	28
	43	3	K167-005-000-20	41	1	K510-003-021-00	82	14
	43	7	K167-005-001-10	41	3	K510-003-022-00	82	15
	43	16	K167-005-200-10	41	2	K510-003-037-00	82	16
6901-931-235-00	42	8	K167-005-300-10	41	4	K510-003-301-00	82	35
	42	10	K167-005-310-10	41	7	K510-003-303-00	82	37
	43	8	K182-007-002-00	53	3	K510-003-304-00	82	38
	43	10	K182-012-001-10	53	2	K510-005-023-00	82	17
7827-205-010-00	33	18	K182-013-000-30	53	1	K510-018-302-00	82	36
8650-203-001-10	57	2	K182-034-002-00	41	5	P103-521-006-10	55	42
	57	4		41	8		56	9
8654-501-043-00	72	11	K182-034-003-00	41	6		56	13
8663-201-004-00	20	11		41	9	P113-201-007-00	63	24
8663-201-005-00	20	8	K200-152-110-20	55	18		64	23
	20	12	K200-282-000-00	55	17	V111-165-001-20	66	4
8664-555-003-00	53	12	K220-002-000-00	56	17	V111-176-002-00	63	31
	56	1	K250-090-002-00	55	28	V120-265-001-60	70	7
8664-905-003-00	76	9	K250-090-003-00	55	29	V120-366-001-20	3	27
	77	9	K275-001-003-00	55	2		4	27
8664-955-002-00	76	10		82	21	V120-366-002-00	58	4
	77	10	K290-001-001-00	55	23	V195-164-008-30	65	10
8669-865-003-00	72	15	K290-001-002-00	55	24	V200-260-605-00	72	12
8680-201-009-00	18	2	K290-001-003-00	55	25	V201-260-803-50	3	23
	18	5	K290-003-000-30	55	21		4	23
	26	2	K500-006-006-10	82	4	V201-260-806-50	9	2
	26	12	K500-006-015-00	82	10	V201-260-807-50	55	38
	33	2	K500-006-017-00	82	12	V201-260-808-00	55	39
	33	6	K500-006-300-10	82	3	V201-260-810-50	32	9

Numerical Index

Part Code	Fig.	Key
V201-261-004-00	39	8
V201-360-803-00	31	33
V201-360-804-00	48	29
V201-360-805-50	31	34
V201-360-812-00	17	5
V201-361-203-00	64	19
V201-361-203-50	79	7
	80	2
V201-361-206-00	79	3
V201-461-003-50	49	67
V201-461-203-50	70	2
	70	9
V203-361-003-00	5	3
	6	3
V210-360-601-60	3	5
	3	7
	4	5
	4	7
	66	22
	66	30
	66	34
	66	37
	66	41
	66	48
V210-360-602-00	55	5
V210-360-603-50	55	3
V211-260-801-60	13	12
	16	15
	56	6
V211-260-802-00	32	7
	60	4
V211-261-002-50	52	2
V211-360-801-60	3	41
	4	41
	9	17
	11	7
	12	9
	29	6
	31	3
	31	17
	44	6
	44	9
	44	17
	44	19
	44	21
V211-360-801-60	45	6
	45	9
	45	17
	45	19
	45	21
	46	3
	46	6
	60	10
V211-360-802-00	3	17
	4	17
	7	6
	8	6
	67	18
V211-361-002-50	42	21
	54	2
	54	5
V211-361-003-00	10	2
V211-370-801-60	44	12
	44	14
	45	12
	45	14
V211-560-801-60	53	9
	57	6
	57	8
V211-560-802-00	30	8
	31	32
	42	18
	43	18
V211-561-002-00	32	13
	35	27
V211-561-002-50	36	15
V211-561-003-00	32	11
	41	13
V211-561-004-00	41	14
V211-660-801-60	41	18
V211-660-802-50	5	6
	6	6
	61	2
V211-660-803-50	40	4
V211-661-002-50	37	7
	42	2
	43	2
	49	62
V211-661-003-00	26	25
V220-541-003-50	82	33
V230-360-601-00	52	16
	52	27
	52	38
V230-360-601-20	29	2
	29	4
V230-360-601-60	63	17
	64	17
	67	17
V231-360-801-20	12	3
	63	33
V231-360-801-60	3	15
	4	15
	22	7
	36	6
	39	6
	48	26
	48	31
	52	47
	58	2
	62	2
V231-360-802-50	16	4
	24	3
	25	3
	26	20
	35	32
	48	22
V231-360-804-00	17	3
	32	6
V231-361-002-00	35	9
	39	2
V231-361-007-00	63	2
	64	2
V231-361-202-00	72	2
V231-361-202-50	63	19
V251-341-002-00	33	22
	42	5
	43	5
V251-341-203-20	42	4
	43	4
V301-260-006-00	11	4
	12	6
	55	4
	72	13
V304-260-008-00	30	17
	30	19

Numerical Index

Part Code	Fig.	Key
V304-260-008-00	30	24
	35	34
	48	28
	54	11
	57	13
	71	13
	72	6
	86	7
V304-260-010-00	13	7
	39	9
V304-260-012-00	1	5
	2	5
V304-260-016-00	57	11
V304-460-008-00	31	35
V304-460-010-00	37	6
	42	15
	43	15
	49	66
V304-460-012-00	30	32
	42	12
	43	12
V305-260-012-00	30	6
	81	3
V327-261-216-00	49	64
V327-262-110-00	50	7
V360-260-004-00	10	6
V360-260-005-00	66	2
	66	12
V360-260-006-00	9	10
	11	5
	12	7
	66	14
	66	16
	66	18
	66	20
	66	35
	67	16
	69	9
V362-260-008-00	3	18
	3	46
	4	18
	4	46
	11	9
	12	11
	30	34

Part Code	Fig.	Key
V362-260-008-00	56	12
	58	10
	66	42
	69	3
	69	6
	69	11
	72	4
V363-260-010-00	30	10
	47	2
V401-160-008-00	9	3
	17	4
	21	4
	30	23
	32	8
	54	12
	55	40
	86	6
V401-160-010-00	5	4
	6	4
	37	5
	42	14
	43	14
	48	11
	50	8
V401-160-012-00	1	6
	2	6
	30	5
	30	31
	42	11
	43	11
	79	4
	79	8
	80	3
V401-160-014-00	51	5
V401-160-016-00	57	10
	70	3
	70	10
V411-260-005-00	52	8
V411-260-006-00	13	9
	23	2
	31	5
	31	19
	35	2
	35	14
	35	25

Part Code	Fig.	Key
V411-260-006-00	47	13
	52	13
	52	24
	52	35
	72	9
V411-260-008-00	9	4
	14	2
	23	7
	30	35
	31	8
	31	13
	31	24
	31	29
	35	11
	35	19
	35	39
	36	8
	36	17
	47	9
	47	12
	52	19
	52	30
	52	41
	55	41
	86	5
V411-260-010-00	13	6
	37	4
	47	4
	48	10
	52	5
	52	44
V411-260-012-00	1	7
	2	7
	63	25
	64	24
	80	4
V411-260-014-00	51	4
V411-260-016-00	49	63
	57	9
	71	4
V411-260-022-00	23	4
	31	21
	35	4
	35	16
	35	22

Numerical Index

Part Code	Fig.	Key
V500-162-002-00	52	14
	52	25
	52	36
V500-162-501-50	13	10
V500-162-502-00	14	3
	23	8
	30	36
	31	9
	31	14
	31	25
	31	30
	35	12
	35	20
	35	40
	36	9
	36	18
	47	5
	47	10
	47	14
	50	9
V500-162-502-50	52	6
	52	45
V500-164-003-00	35	23
	49	65
V523-100-801-60	19	3
	21	3
V523-101-002-20	16	3
	17	2
	24	2
	25	2
	26	19
	32	5
	32	10
	48	21
V530-160-803-20	35	29
	36	12
V560-160-005-00	52	9
V560-160-008-00	52	20
	52	31
	52	42
V580-140-301-80	47	8
V600-110-620-30	26	9
V600-110-620-40	26	5
	26	8
	26	14

Part Code	Fig.	Key
V600-110-620-40	27	2
	27	14
	28	2
	28	14
	48	16
V600-110-620-60	26	4
	33	15
V600-110-630-50	20	10
	82	9
V600-111-600-40	27	11
	28	11
V600-150-620-10	30	4
V704-140-016-00	34	3
V704-140-017-00	26	10
V704-140-018-00	30	14
	30	28
V704-140-020-00	27	3
	27	12
	28	3
	28	12
V704-140-022-00	23	5
	31	22
	34	10
	35	5
	35	17
V704-140-025-00	33	10
	82	24
V704-140-030-00	20	5
	33	21
	87	10
V705-140-032-00	82	26
V705-140-034-00	26	15
V705-140-045-00	48	5
V705-140-047-00	48	18
V705-140-052-00	26	29
	33	3
	33	7
V707-140-062-00	20	14
V707-140-072-00	25	4
	27	16
	28	16
V720-102-401-00	83	2
V720-102-401-80	34	9
V720-102-402-00	71	10
V720-103-502-40	22	4

Part Code	Fig.	Key
V720-103-502-40	48	24
V720-103-502-60	16	12
V720-103-504-40	83	6
V720-111-900-70	55	36
V720-111-901-00	82	39
V720-112-401-10	54	16
	55	8
	55	10
	55	13
	55	45
	55	49
	55	53
	55	56
	82	23
V720-112-401-20	55	35
V720-112-401-40	55	31
	55	32
	55	43
	56	10
	56	14
	56	16
	56	18
	56	20
	56	23
	82	22
V720-112-401-50	19	6
V720-112-401-60	55	20
V720-112-402-00	55	22
V720-112-402-20	55	19
V721-103-103-50	54	8
V721-103-104-50	54	4
V721-103-105-00	19	4
V721-103-106-00	82	31
V721-103-106-50	48	7
V721-103-107-00	19	5
V723-102-003-40	26	17
V723-102-004-20	41	11
V723-102-005-00	65	21
V723-112-003-80	41	10
V724-124-304-20	53	5
V730-104-804-20	53	6
V744-120-350-70	48	17
V744-120-400-80	33	17
V744-120-420-80	18	3
V744-125-450-80	48	6

Numerical Index

Part Code	Fig.	Key	Part Code	Fig.	Key	Part Code	Fig.	Key
V744-130-450-80	33	4						
	33	8						
V760-150-000-00	23	3						
	31	6						
	31	20						
	35	3						
	35	15						
	35	26						
	49	61						
V780-140-000-1T	55	26						
	82	40						
V780-140-000-20	55	37						
V782-160-000-2B	48	20						
V782-160-000-4B	48	4						
	49	59						
V782-160-000-6B	32	2						
V782-160-000-8B	16	7						
	32	4						
V793-142-480-60	53	4						
W201-261-206-00	81	2						

Alpabetical Index

6004-097-690-00

Description	Fig.	Key
ADAPTER/ 255X065 ASSY	23	1
ARM/ CONTROL	21	28
ARM/ FLOATING COMP	21	20
ARM/ TENSION	23	2
BALL, STEEL	2	5
BEARING, RB/ 6203	21	13
BEARING/ BALL	10	44
	21	14
	30	6
	30	11
BEARING/ CONNECTING R	14	7
BEARING/ CRANK/ LOWER	6	12
BEARING/ CRANK/ UPPER	6	11
BEARING/ CRANKSET	6	10
BEARING/ THRUST/ CRANK	6	13
	7	2
	7	4
BELT/ VNR5A36.5	19	6
BODY/ NOZZLE HOLDER	28	2
BODY/ OILPUMP	17	2
BOLT	2	7
	6	2
	10	38
	12	18
	30	9
	30	10
	30	19
	30	20
	30	21
	30	22
	30	24
BOLT, JOINT	17	11
BOLT, S/ M6X12/ 7T	13	5
	21	16
BOLT, S/ M6X25/ 7T	17	5
BOLT, S/ M8X20/ 7T	10	51
BOLT, S/ M8X25/ 7T	5	3
BOLT, SEMS/ M10X20, 7T	9	3
BOLT, SEMS/ M10X25, 7T	24	8
BOLT/ CONNECTINGROD	14	6
BOLT/ CRANK	16	9
BOLT/ FLANGE	16	7
BOLT/ M6	10	32
	10	33
BOLT/ M6X10	21	18
BOLT/ M8X20/ 7T	21	8
BOLT/ WASHERHEAD	29	8
BOLT/ WS	17	4
	19	5
BRACKET ROCKER SHAFT	12	12
BRACKET, ROCKER SHAFT	12	13
BRG/ CONROD/ UN050 SET	7	5
BRG/ CONROD/ UN100 SET	7	6
BRG/ CRANK/ UN050 SET	7	1
BRG/ CRANK/ UN100 SET	7	3
BRUSH	30	17
BUSH	30	15
CAMSHAFT/ INJECTION P	21	10
CAP, BLANK/ 30	10	35
CAP, OIL FILLER	3	2
CAP, SEALING	2	2
CARTRIDGE/ OILFILTER	17	13
CLAMP, STRAINER	17	8
CLAMP/ WIRE/ 10-15	18	14
CLIP/ HOSE/ 7.6-8.2	22	5
COLLOR	30	3
CONNECTINGROD ASSY	14	5
CONNECTOR, OIL FILTER	6	24
CONNECTOR/ FUEL	22	1
CONNECTOR/ GLOWPLUG	25	5
CORRUGATEDTUBE	22	6
COVER, BEARING	30	5
COVER/ CYLINDER HEAD	3	1
COVER/ END/ REAR	30	13
COVER/ HYDRAULIC	10	47
COVER/ INJECTIONPUMP	6	25
CRANKSHAFT ASSY	16	1
CUP/ SEALING/ 12	6	7
CUP/ SEALING/ 16	10	3
CUP/ SEALING/ 28	6	3
CUP/ SEALING/ 36	6	4
CUTTER, VALVE	12	5
CYLINDERBLOCK ASSY	6	1
CYLINDERHEAD ASSY	2	1
DOWEL	6	21
ELEMENT ASSY	29	7
FAN/ COOLING	19	1
FLANGEBOLT/ M10X20	11	2
FLANGEBOLT/ M10X70	24	5
FLANGEBOLT/ M6X10	8	4
FLANGEBOLT/ M6X12	6	27
FLANGEBOLT/ M6X16	25	8
FLANGEBOLT/ M8X16	10	11
	17	9
FLANGEBOLT/ M8X20	4	3
	18	11
	18	17
	24	3
FLANGEBOLT/ M8X25	18	22
FLANGEBOLT/ M8X30	10	15
FLANGEBOLT/ M8X45	10	12
	18	6
FLANGEBOLT/ M8X50	12	19
FLANGEBOLT/ M8X55	10	9
FLANGEBOLT/ M8X75	10	13
	18	18
FLANGEBOLT/ M8X85	10	8
FLYWEIGHT	21	17
FLYWHEEL ASSY	16	5
FRAME/ DRIVEEND ASSY	30	7
FRAME/ END/ REAR	30	12
GASKET	3	5
	18	2
	25	7
	27	5
	27	22
GASKET, EXH. MANIFOLD	5	2
	27	7
GASKET, INLET MANIFOL	4	2
	27	6
GASKET, NOZZLE	20	3
GASKET/ COVER	6	26
	10	48
	27	11
GASKET/ CYLINDERHEAD	2	6
	27	3
GASKET/ DELIVERYVALVE	29	4
GASKET/ GEARCASE	10	27
	27	14
GASKET/ HOUSING	18	16
	27	20
GASKET/ PLATE	10	37
	27	15
GASKET/ SPACER	18	9
	27	19

Alpabetical Index

Description	Fig.	Key
GASKET/ WATERPUMP	18	5
	27	18
GEAR/ CAMSHAFT	13	2
GEAR/ CRANK	16	3
GEAR/ IDLE ASSY	13	6
GEAR/ INJECTIONPUMP	21	11
GEARCASE ASSY	10	1
GENERATOR ASSY	24	1
GLOWPLUG	25	3
GUIDE/ LEVELGAGE COMP	6	30
HANGER	11	1
HOLDER/ BRUSH ASSY	30	16
HOLDER/ DELIVERYVALVE	29	2
HOLDER/ JE/ 9-9	10	14
HOLDER/ NOZZLE ASSY	28	1
HOLDER/ RECTIFIE ASSY	30	14
HOSE/ RUBBER	3	6
	18	13
	22	3
HOUSING ASSY	29	6
HOUSING/ THERMOSTAT	18	15
INJECTIONNOZZLE ASSY	20	1
INJECTIONPUMP ASSY	21	1
KEY/ 07X05X09	13	3
	21	12
KEY/ 07X05X20	16	4
LEVELGAGE	6	29
LEVER/ CONTROL COMP	21	25
MANIFOLD(INLET) ASSY	4	1
MANIFOLD, EXH	5	1
NIPPLE	6	22
NOZZLE ASSY	28	51
NUT	12	17
	28	50
	30	2
	30	23
	30	25
NUT, CAP/ M8	10	19
NUT/ CAP	3	4
NUT/ FLANGE	25	4
NUT/ FLANGE/ M10	24	6
NUT/ M08	10	10
	12	20
	18	7
	18	12

Description	Fig.	Key
NUT/ M08	21	9
NUT/ M6	10	34
	21	29
NUT/ M8	10	18
	10	45
	10	49
NUT/ NOZZLERETAINING	28	5
OILPAN COMP	8	1
OILPUMP ASSY	17	1
ORING	29	3
O-RING/ 1A, P15	17	7
	27	17
O-RING/ 1A, P18	8	3
O-RING/ 1A, P8	21	26
O-RING/ 1A, S50	10	40
	27	16
O-RING/ 1A, S55	18	21
	27	21
PACKING	10	20
	17	12
	27	13
PIECE, DISTANCE	28	6
PIN	6	17
	6	28
	10	23
PIN, CONTROL	21	22
PIN, GROOVE	10	26
PIN, NOZZLE HOLDER	28	3
PIN, PISTON	14	3
PIN, ST, B/ 10X18	16	2
PIN/ ARM	10	21
PIN/ IDLEGEAR	6	6
PIN/ INJECTIONPUMP	29	10
PIN/ SNAP	10	22
PIN/ STRAIGHT	6	16
	17	3
PIN/ TUBE	6	15
	10	41
PIPE, OIL	17	10
PIPE/ FUEL	22	2
PIPE/ INJECTION ASSY	20	4
	20	5
	20	6
PIPE/ WATEROUTLET	18	20
PISTON	14	1

Description	Fig.	Key
PISTON(OV/ 050)	15	1
PISTON(OV/ 100)	15	3
PISTON/ VALVE/ RELIEF	10	29
PLATE	29	11
	30	8
PLATE/ ADJUST	24	2
PLATE/ ADJUSTING	29	9
PLATE/ FRONT	10	36
PLATE/ REAR COMP	9	1
PLATE/ TAPPET/ AD 0.2	29	23
PLATE/ TAPPET/ AD 0.25	29	27
PLATE/ TAPPET/ AD 0.3	29	24
PLATE/ TAPPET/ AD 0.35	29	28
PLATE/ TAPPET/ AD 0.4	29	25
PLATE/ TAPPET/ AD 0.45	29	29
PLATE/ TAPPET/ AD 0.5	29	26
PLATE/ TAPPET/ AD 0.55	29	30
PLATE/ TAPPET/ AD 0.6	29	18
PLATE/ TAPPET/ AD 0.65	29	31
PLATE/ TAPPET/ AD 0.7	29	19
PLATE/ TAPPET/ AD 0.8	29	20
PLATE/ TAPPET/ AD 0.9	29	21
PLATE/ TAPPET/ AD 1.0	29	22
PLATE/ THRUST	13	4
PLATE/ THRUST/ INJECTI	21	15
PLATE/ WATER PUMP	18	3
PLUG	12	11
PLUG/ M14X1.5	8	2
PLUG/ PT1/2	2	3
PLUG/ PT1/8	6	5
	10	2
PLUG/ SCREW	10	24
PLUG/ SCREW SEAL	6	23
POINTER	9	2
PULLEY	30	1
PULLEY/ CRANK	16	8
PULLEY/ WATERPUMP	19	2
RACK/ CONTROL ASSY	29	13
REGULATOR ASSY	26	1
	30	26
REPAIR/ ENGINE SET	27	1
RESISTANCE/ 1.0	22	4
RING, SNAP	14	4
RING, SNAP/ 12 C	10	31
RING, SNAP/ 16 C	12	15

Alpabetical Index

6004-097-690-00

Description	Fig.	Key
RING, SNAP/4 E	21	23
RING/PISTON SET	14	2
RINGGEAR	16	6
RINGPISTON/OV050 SET	15	2
RINGPISTON/OV100 SET	15	4
RINK/CONTROL	21	21
ROCKERARM	12	9
ROCKERSHAFT ASSY	12	8
ROD, PUSH	12	7
ROTOR ASSY	30	4
SCREW ADJUST	12	16
SCREW HOLLOW	21	3
SCREW WATER PUMP	18	4
SEAL, BEARING CAP	6	8
	27	8
SEAL, BEARING CAP/7	6	9
	27	9
SEAL, CYL. HEAD COVER	3	3
	27	4
SEAL, OIL	2	4
	6	14
	10	7
	27	2
	27	10
	27	12
SEAT/SPRING/LOWER	29	17
SEAT/SPRING/UPPER	29	15
SEAT/VALVESPRING	12	4
SHAFT, CAM	13	1
SHAFT/HYDRAULIC ASSY	10	43
SHAFT/ROCKERARM ASSY	12	10
SHIM/INJECTIONPUMP	21	4
	21	5
	21	6
	21	7
SHORTBLOCKENGIN ASSY	1	1
SLEEVE/PLUNGER	29	14
SOLENOID	25	6
SPACER	10	39
SPACER, PUMP. WATER	18	8
SPACER/FAN	19	3
SPACER/FAN/48	19	4
SPRING	12	14
	30	18
SPRING, RETURN	21	27
SPRING, STARTING	21	32
SPRING/DELIVERYVALVE	29	1
SPRING/NOZZLEHOLDER	28	4
SPRING/PUMPPLUNGER	29	16
SPRING/RELIEF VALVE	10	30
SPRING/VALVE	12	3
SPRINNG/GOVERNOR	21	24
STARTER ASSY	24	7
STOPPER/FULLLOAD	10	17
STRAINER	17	6
STUD	2	8
	6	19
	6	20
	10	4
	10	5
	10	6
	10	42
STUD/M8X40	6	18
	18	10
SWITCH/OILPRESSURE	25	1
TAPPET	12	6
TAPPET/INJECTIO ASSY	29	12
THERMOMETER	25	2
THERMOSTAT	18	19
THRUSTPIECE	21	19
VALVE ASSY	29	5
VALVE/EXHAUST	12	2
VALVE/INTAKE	12	1
VALVE/RELIEF ASSY	10	28
WASHER	20	2
WASHER, PL/M6	21	30
WASHER, SP/M6	21	31
WASHER, SP/M8	10	46
	10	50
WASHER/0.9	28	7
WASHER/0.925	28	8
WASHER/0.95	28	9
WASHER/0.975	28	10
WASHER/08X14X01	10	16
	10	25
	27	23
WASHER/1.0	28	11
WASHER/1.025	28	12
WASHER/1.05	28	13
WASHER/1.075	28	14
WASHER/1.1	28	15
WASHER/1.125	28	16
WASHER/1.15	28	17
WASHER/1.175	28	18
WASHER/1.2	28	19
WASHER/1.225	28	20
WASHER/1.25	28	21
WASHER/1.275	28	22
WASHER/1.3	28	23
WASHER/1.325	28	24
WASHER/1.35	28	25
WASHER/1.375	28	26
WASHER/1.4	28	27
WASHER/1.425	28	28
WASHER/1.45	28	29
WASHER/1.475	28	30
WASHER/1.5	28	31
WASHER/1.525	28	32
WASHER/1.55	28	33
WASHER/1.575	28	34
WASHER/1.6	28	35
WASHER/1.625	28	36
WASHER/1.65	28	37
WASHER/1.675	28	38
WASHER/1.7	28	39
WASHER/1.725	28	40
WASHER/1.75	28	41
WASHER/1.775	28	42
WASHER/1.8	28	43
WASHER/1.825	28	44
WASHER/1.85	28	45
WASHER/1.875	28	46
WASHER/1.9	28	47
WASHER/1.925	28	48
WASHER/1.95	28	49
WASHER/9X22X2	24	4
WASHER/AIR BLEEDER	21	2
WATERPUMP ASSY	18	1

Alpabetical Index

6005-097-245-00

Description	Fig.	Key
ADAPTER/240X100 ASSY	23	1
ARM/CONTROL	21	27
ARM/FLOATING COMP	21	18
ARM/TENSION	23	2
ARMATURE/STARTE ASSY	29	2
BALL	29	17
BALL, STEEL	2	5
BEARING	29	3
	29	4
BEARING, RB/6203	21	11
BEARING/BALL	10	45
	21	12
	30	6
	30	11
BEARING/CONNECTING R	14	7
BEARING/CRANK SET	6	11
BEARING/CRANK/LOWER	6	13
BEARING/CRANK/UPPER	6	12
BEARING/THRUST/CRANK	6	14
	7	2
	7	4
BELT/VNR5A40.0	19	5
BOLT	2	7
	6	2
	10	39
	12	18
	28	9
	28	51
	30	9
	30	10
	30	19
	30	20
	30	21
	30	22
	30	24
BOLT, S/M6X12/7T	13	5
	21	14
BOLT, S/M8X20/7T	10	52
BOLT, S/M8X25/7T	5	3
BOLT, SEMS/M10X20, 7T	11	2
BOLT, SEMS/M12X40/7T	24	8
BOLT/CONNECTINGROD	14	6
BOLT/CRANK	16	9
BOLT/FLANGE	16	7
BOLT/M6	10	34
BOLT/M6	10	35
BOLT/M6X10	21	16
BOLT/THROUGH	29	16
BOLT/WS	9	3
	17	3
	19	4
	29	15
BRACKET/ROCKERSHAFT	12	12
	12	13
BRG/CONROD/UN025 SET	7	5
BRG/CONROD/UN050 SET	7	6
BRG/CRANK/UN025 SET	7	1
BRG/CRANK/UN050 SET	7	3
BRUSH	30	17
BUSH	30	15
BUSH/CONNECTINGROD	26	22
BUSHING/DRAIN	29	20
CAMSHAFT	13	1
CAMSHAFT/INJPUMP	21	8
CAP, OIL FILLER	3	5
CAP/OILFILLER	6	31
CARTRIDGE/OILFILTER	17	9
CLAMP/STRAINER	17	7
CLAMP/WIRE/10-15	18	11
CLAMP/WIRE/16-20	17	15
CLIP/HOSE/7.6-8.2	22	5
CLUTCH/STARTER ASSY	29	5
COLLOR	30	3
CONNECTINGROD ASSY	14	5
CONNECTOR/FUEL	22	1
CONNECTOR/GLOWPLUG	25	5
CONNECTOR/OILCOOLER	17	11
CONTROLRACK	28	47
CONTROLSLEEVE	28	48
CORRUGATEDTUBE	22	6
COVER	29	23
COVER, BEARING	30	5
COVER/BLOWBY	3	3
COVER/CYLINDER HEAD	3	1
COVER/END/REAR	30	13
COVER/HYDRAULIC	10	48
COVER/INJECTIONPUMP	6	25
CRANKSHAFT ASSY	16	1
CUP/SEALING/16	6	3
CUP/SEALING/20	10	3
CUP/SEALING/28	6	4
CUP/SEALING/36	6	5
CUP/SEALING/50	2	2
	6	6
CUTTER, VALVE	12	5
CYLINDERBLOCK ASSY	6	1
CYLINDERHEAD ASSY	2	1
DOWEL	6	22
EYEBOLT	28	49
EYEBOLT/OILJET ASSY	6	34
FAN/COOLING	19	1
FLANGEBOLT/M10X20	11	3
FLANGEBOLT/M10X70	24	5
FLANGEBOLT/M6X10	8	4
FLANGEBOLT/M6X12	6	27
FLANGEBOLT/M6X16	25	8
FLANGEBOLT/M8X16	10	12
	17	8
FLANGEBOLT/M8X20	18	8
	18	14
	21	6
	24	3
FLANGEBOLT/M8X25	4	3
	18	19
FLANGEBOLT/M8X30	10	16
FLANGEBOLT/M8X45	18	7
FLANGEBOLT/M8X50	10	13
FLANGEBOLT/M8X55	12	19
FLANGEBOLT/M8X60	10	14
FLANGEBOLT/M8X70	10	10
FLANGEBOLT/M8X75	10	9
	18	15
FLANGEBOLT/M8X85	10	8
FLYWEIGHT ASSY	21	15
FLYWHEEL ASSY	16	5
FRAME/DRIVEEND ASSY	30	7
FRAME/END/REAR	30	12
FRAME/STARTEREND	29	10
GASKET	3	8
	20	5
	25	7
	26	5
	26	21
	27	17
	28	4

Alpabetical Index

6005-097-245-00

Description	Fig.	Key
GASKET	28	50
	28	52
GASKET, NOZZLE	20	2
GASKET, WATER PUMP	26	18
GASKET/COVER	6	26
	10	49
	26	11
GASKET/CYLINDERHEAD	2	6
	26	3
GASKET/EXH MANIFOLD	5	2
	26	7
GASKET/GEARCASE	10	28
	26	14
GASKET/HOUSING	18	13
	26	19
GASKET/INLETMANIFOLD	4	2
	26	6
GASKET/PLATE	10	38
	26	15
GASKET/SPACER	18	5
GASKET/WATERPUMP	18	2
GEAR/CAMSHAFT	13	2
GEAR/CRANK	16	3
GEAR/IDLE ASSY	13	6
GEAR/INJECTIONPUMP	21	9
GEARCASE ASSY	10	1
GENERATOR ASSY	24	1
GLOWPLUG	25	3
GUIDE/LEVELGAGE COMP	6	30
HANGER	11	1
HEATSHILD/NOZZLE	20	3
HOLDER/BRUSH ASSY	30	16
HOLDER/DELIVERYVALVE	28	5
HOLDER/JE/9-9	10	15
	17	16
HOLDER/NOZZLEASSY	27	1
HOLDER/RECTIFIE ASSY	30	14
HOLDER/STARTER ASSY	29	11
HOSE/OILCOOLER/IN	17	13
HOSE/OILCOOLER/OUT	17	14
HOSE/RUBBER	3	9
	18	10
	22	3
HOUSING/STARTER ASSY	29	9
HOUSING/THERMOSTAT	18	12

Description	Fig.	Key
INJECTIONNOZZLE ASSY	20	1
INJECTIONPUMP ASSY	21	1
KEY/07X05X09	13	3
	21	10
KEY/07X05X20	16	4
LEVELGAGE	6	29
LEVER/CONTROL COMP	21	24
MANIFOLD/EXHAUST	5	1
MANIFOLD/INLET ASSY	4	1
NOZZLE	27	16
NUT	12	17
	27	18
	29	21
	29	22
	30	2
	30	23
	30	25
NUT, CAP/M8	10	20
NUT/CAP	3	7
NUT/FLANGE	25	4
NUT/FLANGE/M10	24	6
NUT/M08	10	11
	12	20
	18	3
	18	9
	21	7
NUT/M12	24	9
NUT/M6	10	36
	21	28
NUT/M8	10	19
	10	46
	10	50
NUT/NOZZLERETAINING	27	15
OILCOOLERASSY	17	10
OILPAN COMP	8	1
OILPUMP ASSY	17	1
OILSEAL	6	15
	26	10
ORIFICE	3	10
O-RING	29	19
ORING	28	6
	28	8
O-RING/1A, P18	8	3
	10	33
O-RING/1A, P22A	17	6

Description	Fig.	Key
O-RING/1A, P22A	26	17
O-RING/1A, P25	6	32
O-RING/1A, P8	21	25
O-RING/1A, S50	10	41
	26	16
O-RING/1A, S55	18	18
	26	20
PACKING	10	21
PIN	6	18
	6	28
	10	24
	28	11
PIN, CONTROL	21	20
PIN, ST, B/10X18	16	2
PIN/ARM	10	22
PIN/GROOVE	10	27
PIN/IDLEGEAR	6	8
PIN/PISTON	14	3
PIN/SNAP	10	23
PIN/SPRING	6	35
PIN/STRAIGHT	6	17
	17	2
PIN/TUBE	6	16
	10	42
PINION/STARTER	29	8
PIPE/FUEL	22	2
PIPE/INJECTION ASSY	20	6
	20	7
	20	8
PIPE/OILJET	6	33
PIPE/WATER/HOUSING	6	24
PIPE/WATEROUTLET	18	17
PISTON	14	1
PISTON(OV/050)	15	1
PISTON(OV/100)	15	3
PISTON/VALVE/RELIEF	10	30
PLATE	30	8
PLATE/ADJUST	24	2
PLATE/FRONT	10	37
PLATE/REAR	9	1
PLATE/T=2.60	28	16
PLATE/T=2.65	28	17
PLATE/T=2.70	28	18
PLATE/T=2.75	28	19
PLATE/T=2.80	28	20

Description	Fig.	Key
PLATE/ T=2.85	28	21
PLATE/ T=2.90	28	22
PLATE/ T=2.95	28	23
PLATE/ T=3.00	28	24
PLATE/ T=3.05	28	25
PLATE/ T=3.10	28	26
PLATE/ T=3.15	28	27
PLATE/ T=3.20	28	28
PLATE/ T=3.25	28	29
PLATE/ T=3.30	28	30
PLATE/ T=3.35	28	31
PLATE/ T=3.40	28	32
PLATE/ T=3.45	28	33
PLATE/ T=3.50	28	34
PLATE/ T=3.55	28	35
PLATE/ T=3.60	28	36
PLATE/ T=3.65	28	37
PLATE/ T=3.70	28	38
PLATE/ T=3.75	28	39
PLATE/ T=3.80	28	40
PLATE/ T=3.85	28	41
PLATE/ T=3.90	28	42
PLATE/ T=3.95	28	43
PLATE/ T=4.00	28	44
PLATE/ T=4.05	28	45
PLATE/ T=4.10	28	46
PLATE/ THRUST	13	4
PLATE/ THRUST/ INJ PUMP	21	13
PLUG	12	11
PLUG/ CYLINDERBLOCK	6	37
PLUG/ M14X1.5	8	2
PLUG/ PT1/2	2	3
PLUG/ PT1/4	10	2
PLUG/ PT1/8	6	7
	6	36
PLUG/ SCREW	10	25
PLUG/ SCREW SEAL	6	23
PLUNGER ASSY	28	1
POINTER	9	2
PULLEY	30	1
PULLEY/ CRANK	16	8
PULLEY/ WATERPUMP	19	2
PUSHROD	12	7
REGULATOR ASSY	30	26
REPAIR/ ENGINESET	26	1

Description	Fig.	Key
RESISTANCE/ 1.0	22	4
RETAINER	29	7
RING SNAP	14	4
RING, SNAP/ 12 C	10	32
RING, SNAP/ 4 E	21	21
RING/ PISTONSET	14	2
RING/ SNAP	12	15
RINGGEAR	16	6
RINGPISTON/ OV050 SET	15	2
RINGPISTON/ OV100 SET	15	4
RINK/ CONTROL	21	19
ROCKERARM	12	9
ROCKERSHAFT ASSY	12	8
RORA	29	6
ROTOR ASSY	30	4
RUBBERFLANGE	3	2
SCREW	29	14
SCREW, SOCKET/ M6X20	17	4
SCREW ADJUST	12	16
SCREW TAPPING	3	4
SEAL, BEARING CAP	6	9
	26	8
SEAL, BEARING CAP/ 7	6	10
	26	9
SEAL, OIL	2	4
	10	7
	26	2
	26	12
SEAL/ CYL HEAD/ UNDER	3	6
	26	4
SEAT/ VALVESPRING	12	4
SHAFT/ HYDRAULIC ASSY	10	44
SHAFT/ ROCKERARM ASSY	12	10
SHIM/ 0.10	27	2
SHIM/ 0.20	27	3
SHIM/ 0.30	27	4
SHIM/ 0.40	27	5
SHIM/ 0.50	27	6
SHIM/ 0.52	27	7
SHIM/ 0.54	27	8
SHIM/ 0.56	27	9
SHIM/ 0.58	27	10
SHIM/ 0.80	27	11
SHIM/ INJECTIONPUMP	21	2
	21	3

Description	Fig.	Key
SHIM/ INJECTIONPUMP	21	4
	21	5
SHORTBLOCKENGIN ASSY	1	1
SLEEVEFLANGE	28	7
SNAPRING	28	12
SOLENOID	25	6
SPACER	10	40
	27	14
SPACER/ FAN/ 48	19	3
SPACER/ WATERPUMP	18	4
SPRING	12	14
	30	18
SPRING, BRUSH	29	12
SPRING, RETURN	21	26
SPRING/ DELIVERYVALVE	28	3
SPRING/ GOVERNOR	21	23
SPRING/ IDLE	21	32
SPRING/ PLUNGER	28	13
SPRING/ RELIEF VALVE	10	31
SPRING/ RETURN	29	18
SPRING/ SETTING	21	22
SPRING/ STARTING	21	31
SPRING/ VALVE	12	3
SPRINGNOZZLE	27	12
SPRINGSEAT	27	13
	28	14
	28	15
STARTER ASSY	24	7
STOPPER/ FULLLOAD	10	18
STRAINER	17	5
STUD	2	8
	6	20
	10	4
	10	5
	10	6
	10	43
STUD/ M8X40	6	19
	18	6
STUD/ M8X60/ 7T	6	21
SWITCH/ MAGNETIC ASSY	29	13
SWITCH/ OILPRESSURE	25	1
TAPPET	12	6
	28	10
THERMOMETER	25	2
THERMOSTAT	18	16

Alpabetical Index

6005-097-245-00

Description	Fig.	Key	Description	Fig.	Key	Description	Fig.	Key
THRUSTPIECE	21	17						
VALVE, DELIVERY	28	2						
VALVE/ EXHAUST	12	2						
VALVE/ INTAKE	12	1						
VALVE/ RELIEF ASSY	10	29						
WASHER, PL/ M6	21	29						
WASHER, SP/ M6	21	30						
WASHER, SP/ M8	10	47						
	10	51						
WASHER/ 08X14X01	10	17						
	10	26						
	26	13						
WASHER/ 9X22X2	24	4						
WASHER/ CORRUGATE	20	4						
WASHER/ OILCOOLER	17	12						
WATERPUMP ASSY	18	1						
YOKE/ STARTER ASSY	29	1						

Description	Fig.	Key
ADAPTER(3/8X1/4)	56	5
ADAPTER/90DEG/3/8	54	9
ADAPTER/90DEG/PUMP	53	7
ADAPTER/G1/4	55	16
ADAPTER/G1/4 ASSY	55	7
ADAPTER/G1/4-MI ASSY	55	52
ADAPTER/G1/4XG3/8	55	30
ADAPTER/G3/8ASSY	56	15
	56	22
ADAPTER/L/G1/4 ASSY	54	15
	55	12
	55	55
ADAPTER/L/G1/4XR1/4	41	15
ADAPTER/L/PF3/8 ASSY	56	19
ADAPTER/L/PT1/8	55	46
ADAPTER/PF1/4 ASSY	55	44
ADAPTER/PT1/8	55	47
ADAPTER/R3/8-G1/4	56	7
ADAPTER/T	53	12
	56	1
ADAPTOR(G3/8) ASSY	54	14
ADPTER/G1/4.1/4	55	9
	55	48
ARM	66	29
	66	33
	66	39
	66	47
ARM/4WD COMP	47	3
	48	23
ARM/BRAKE COMP	35	1
ARM/BRAKE/SHAFT COMP	35	28
	36	11
ARM/COUNTER/BRAKE	35	13
ARM/COUNTER/FRONT	31	10
ARM/COUNTER/REA ASSY	31	26
ARM/DIFF COMP	22	2
ARM/DUMP/COLLECTOR	52	32
ARM/HST ASSY	30	25
ARM/HST/F COMP	31	4
ARM/HST/R COMP	31	18
ARM/LIFT/COLLECTOR	52	21
ARM/LIFT/LH ASSY	57	1
ARM/LIFT/MOWER COMP	52	10
ARM/LIFT/RH ASSY	57	3
ARM/MIRROR ASSY	63	16

Description	Fig.	Key
ARM/MIRROR ASSY	64	16
ARM/NEUTRAL ASSY	30	11
ARM/PARKING COMP	36	10
ARM/SPOOL COMP	52	3
ARM/TRUNNION COMP	30	1
BAND	63	23
	67	14
	71	8
BAND, WIRE/140	67	20
BAND, WIRE/250	67	19
BAR/ROCK COMP	39	7
BATTERY/55B24R ASSY	12	1
BATTERY/80D26R ASSY	11	1
BEARING, RB/16004	27	11
	28	11
BEARING, RB/6201SS	30	4
BEARING, RB/6203	26	9
BEARING, RB/6204	26	5
	26	8
	26	14
	27	2
	27	14
	28	2
	28	14
	48	16
BEARING, RB/6206	26	4
	33	15
BEARING, RB/6305	20	10
	82	9
BEARING/6010/KBC	49	14
BEARING/6205/KBC	49	32
	49	51
BEARING/6206/KBC	49	29
	49	52
BEARING/6304/KBC	49	46
BEARING/BALL	18	7
	20	2
	26	27
	27	5
	27	10
	27	15
	28	5
	28	10
	28	15
	33	11

Description	Fig.	Key
BEARING/BALL	49	2
BEARING/BALL/6010C	21	12
BEARING/BALL/6909	49	34
BEARING/BALL/HPS	18	2
	18	5
	21	13
	26	2
	26	12
	26	28
	33	2
	33	6
BLOCK/CYLINDER/HMP1	82	3
BLOCK/PORT/HMP1/008	82	2
BODY/VALVE/PTO	55	33
BOLT, S/M10X20/7T	32	13
	35	27
BOLT, S/M10X25	52	2
BOLT, S/M10X25/7T	36	15
BOLT, S/M10X30/7T	32	11
	41	13
BOLT, S/M10X40/7T	41	14
BOLT, S/M8X16	13	12
	16	15
	56	6
BOLT, S/M8X16/7T	53	9
	57	6
	57	8
BOLT, S/M8X20	32	7
	60	4
BOLT, S/M8X20/7T	30	8
	31	32
	42	18
	43	18
BOLT, SEMS/M10X20, 7T	2	3
BOLT, SEMS/M12X25/7T	1	3
	42	3
	42	7
	42	16
	43	3
	43	7
	43	16
BOLT, SEMS/M12X35/7T	42	8
	42	10
	43	8
	43	10

Alpabetical Index

1832-097-100-00

Description	Fig.	Key
BOLT, SP/ M10X25	42	21
	54	2
	54	5
BOLT, SP/ M10X25/ 7T	37	7
	42	2
	43	2
	49	62
BOLT, SP/ M10X30	10	2
BOLT, SP/ M10X30/ 7T	26	25
BOLT, SP/ M6X16	3	5
	3	7
	4	5
	4	7
	66	22
	66	30
	66	34
	66	37
	66	41
	66	48
BOLT, SP/ M6X20	55	5
BOLT, SP/ M6X35	55	3
BOLT, SP/ M8X16	3	41
	4	41
	9	17
	11	7
	12	9
	29	6
	31	3
	31	17
	44	6
	44	9
	44	12
	44	14
	44	17
	44	19
	44	21
	45	6
	45	9
	45	12
	45	14
	45	17
	45	19
	45	21
	46	3
	46	6

Description	Fig.	Key
BOLT, SP/ M8X16	60	10
BOLT, SP/ M8X16/ 7T	41	18
BOLT, SP/ M8X20	3	17
	4	17
	7	6
	8	6
	67	18
BOLT, SP/ M8X25/ 7T	5	6
	6	6
	61	2
BOLT, SP/ M8X35/ 7T	40	4
BOLT/ BATTERY	11	2
	12	4
BOLT/ LH/ M12X1.25X25	72	16
BOLT/ M06X08/ APSET	83	8
BOLT/ M10X190	48	12
BOLT/ M10X21	39	4
BOLT/ M10X30/ 7T, P1.25	5	3
	6	3
BOLT/ M10X35/ 9T	49	67
BOLT/ M10X40	39	8
BOLT/ M12X30/ 7T	64	19
BOLT/ M12X35/ 7T	79	7
	80	2
BOLT/ M12X35/ 9T	70	2
	70	9
BOLT/ M12X60	81	2
BOLT/ M12X60/ 7T	79	3
BOLT/ M14X1.5X30	51	6
BOLT/ M16X120	71	2
BOLT/ M6X50	72	12
BOLT/ M8X105	32	9
BOLT/ M8X120/ 7T	17	5
BOLT/ M8X25	21	5
BOLT/ M8X30/ 7T	31	33
BOLT/ M8X35	3	23
	4	23
BOLT/ M8X40/ 7T	48	29
BOLT/ M8X55/ 7T	31	34
BOLT/ M8X65	9	2
BOLT/ M8X75	55	38
BOLT/ M8X80	55	39
BOLT/ S/ M12X30	49	22
	49	26
BOLT/ SEAL/ M8X30X9T	15	3

Description	Fig.	Key
BOLT/ SEAL/ M8X30X9T	48	2
BOLT/ SM/ M10X23	30	2
BOLT/ SP/ M10X30	49	54
BOOT	66	27
BOOT/ COVER/ COLUMN	59	4
BRACKET/ COVER COMP	39	5
BRACKET/ LEVER/ 4WD	47	1
BRACKET/ LEVER/ ACCELE	13	3
BRACKET/ MOUNT/ L COMP	1	1
	2	1
BRACKET/ MOUNT/ R COMP	1	2
	2	2
BRACKET/ MUFFLER/ 224	6	5
BRACKET/ MUFFLER/ 235	5	5
BRACKET/ NEUTRAL COMP	30	7
BRACKET/ VALVE COMP	52	1
BRACKET/ WEIGHT COMP	79	6
BRAKE/ 114 ASSY	34	4
BRAKE/ SHOE ASSY	34	5
BULB/ 12V/ 5W	63	27
	64	26
BULB/ 12V21/ 5W	86	9
BULB/ 12V21W	63	7
	63	12
	64	7
	64	12
	86	8
BULB/ 12V3.4W	65	20
BULB/ 12V4W	63	8
	63	13
	64	8
	64	13
BULB/ H4/ 60/ 55W	63	6
	63	11
	64	6
	64	11
BUMPER/ REAR COMP	63	18
	64	18
BUSH	84	7
BUSH, LEVER	3	19
	4	19
BUSH/ 10X12X15	19	2
BUSH/ 18X20X20	30	12
	30	26
BUSH/ 20X23X20	57	2

Description	Fig.	Key
BUSH/ 20X23X20	57	4
BUSH/ 22X25X25	31	11
	31	27
	35	31
	36	14
	49	19
BUSH/ 40X44X15	82	12
BUTTON	36	4
BUZZER	66	21
CABLE/ 4WD/ LOCK ASSY	47	11
CABLE/ ACCELERATOR	13	8
CABLE/ ACCELERATOR/ AU	14	1
CABLE/ BATTERY ASSY	11	8
	12	10
CABLE/ DIFF ASSY	23	6
CABLE/ EARTH ASSY	11	6
	12	8
CAM/ CENTER	84	10
CAM/ DRIVE	84	13
CAM/ DRIVEN	84	8
CAP	3	32
	4	32
	83	4
CAP, BLANK/ 72	25	5
CAP, OIL	49	57
CAP, PTO SHAFT	29	5
CAP/ NONLEAK ASSY	10	8
CAP/ OIL(30)	16	16
CAP/ PIPE	63	4
	64	4
CAP/ WHEEL	38	2
CASE, DIFF	21	6
CASE/ 4WD	48	3
CASE/ BLOWER COMP	72	1
CASE/ CHAIN/ A	32	1
CASE/ CHAIN/ B	32	3
CASE/ CONTROLLER COMP	69	1
CASE/ DIFFERENTIAL/ FR	49	8
CASE/ FINAL/ LOWER/ LH	49	38
CASE/ FINAL/ LOWER/ RH	49	41
CASE/ FINAL/ UPPER/ LH	49	20
CASE/ FINAL/ UPPER/ RH	49	24
CASE/ HMP1/ 008	82	1
CASE/ TRANSMISSION/ LH	16	1
CASE/ TRANSMISSION/ RH	16	2
CHAIN/ ROLLER60X060	33	13
CHUTE/ BLOWER COMP	72	3
CHUTE/ GUIDE COMP	72	7
CLAMP/ 28X55	41	17
CLAMP/ WIRE/ 30-38	3	11
	4	11
CLAMP/ WIRE/ 36-44	3	10
	4	10
CLAMP/ WIRE/ 47-55	8	9
CLAMP/ WIRE/ 52-63	7	8
	7	10
	8	8
	8	11
CLAMP/ WORM/ 16-25	54	7
CLEANER/ AIR ASSY	7	1
	8	1
CLIP	7	3
	8	3
CLIP/ BAND/ 4.5	67	15
CLIP/ HOSE/ 11.1-12.0	9	12
CLIP/ HOSE/ 11.9-12.6	9	6
	9	8
CLIP/ HOSE/ 13.8-14.8	16	10
	16	14
CLIP/ HOSE/ 14.7-15.9	3	13
	4	13
CLIP/ HOSE/ 8.7-9.3	9	14
CLUMP	3	36
	4	36
CLUTCH ASSY	48	13
CLUTCH/ DIFFLOCK	22	1
CLUTCH/ PTO ASSY	26	6
	27	6
	28	6
COLLAR, PINION THRUST	21	9
COLLAR, THRUST	21	11
COLLAR/ 08X12X15	40	3
COLLAR/ 12X22X80	39	12
COLLAR/ 48X52X17	49	5
COLLAR/ 50X62X08	20	6
COLLAR/ 53X61X06	20	3
COLUMN/ STEERING/ LOWE	39	1
COLUMN/ STEERING/ UPPE	39	3
CONNECTOR/ SUCTION	54	3
CONTROLLER ASSY	69	5
CONTROLLER/ PTO ASSY	69	7
CONTROLLER/ STEERING	40	1
COOLER/ OIL ASSY	56	11
COUPLING/ PTO	27	4
	28	4
COUPRING/ 16X27X55	26	22
COVER ASSY	7	2
	8	2
COVER, BRAKE	34	7
COVER/ 4WD COMP	48	30
COVER/ BATTERY	11	3
	12	5
COVER/ BUSH/ HMP1/ 008	82	29
COVER/ CHUTE/ SIDE	44	20
COVER/ CHUTE/ SIDE/ W	45	20
COVER/ COLUMN/ F	59	1
COVER/ COLUMN/ R	59	2
COVER/ CONTROLLER	69	10
COVER/ DUST	50	4
COVER/ ENGINE COMP	58	1
COVER/ FRONT	60	6
COVER/ FUSE	67	11
COVER/ RADIATOR COMP	3	26
	4	26
COVER/ RADIATOR/ UPPER	3	42
	4	42
COVER/ REAR/ UNDER	44	13
	45	13
COVER/ REAR/ UPPER	44	11
	45	11
COVER/ REARLIGHT	63	32
COVER/ ROD/ A SET	41	4
COVER/ ROD/ B SET	41	7
COVER/ SIDE/ LH/ F COMP	44	2
	45	2
COVER/ SIDE/ LH/ R COMP	44	1
	45	1
COVER/ SIDE/ RH COMP	44	8
	45	8
COVER/ SIDEPTO	29	3
COVER/ TANK	10	12
COVER/ TRUNNION/ HMP1/	82	30
COVER/ WHEEL	49	53
CUSHION, B/ RUBBER	72	5
CUSHION/ RUBBER/ 10X25	3	22

Alpabetical Index

1832-097-100-00

Description	Fig.	Key
CUSHION/ RUBBER/ 10X25	4	22
CYLINDER ASSY	41	1
CYLINDER/ 013 ASSY	53	1
DAMPER/ OIL ASSY	30	33
DIODE/ 3.0A	67	13
DISC/ BRAKE	85	7
DISK/ BRAKE	87	11
DRUM/ BRAKE	34	1
DUMPER/ HOOD ASSY	58	9
DUST SEAL	41	6
	41	9
DUST SEAL SER42	53	4
ELBOW 90DEG ASSY	55	42
	56	9
	56	13
ELEMENT	83	7
ELEMENT ASSY	7	4
	8	4
FAN COMP	72	14
FAN/ RADIATOR/ 22 ASSY	4	6
FAN/ RADIATOR/ 23 ASSY	3	6
FENDER/ SF2	60	1
FILTER/ FUEL	10	7
FILTER/ FUEL ASSY	9	1
FILTER/ OIL ASSY	56	3
	56	4
FILTER/ PORT/ 09	55	34
FILTER/ SUCTION/ 400	54	1
FLANGEBOLT/ M10X20	35	9
	39	2
FLANGEBOLT/ M10X70	63	2
	64	2
FLANGEBOLT/ M12X20	72	2
FLANGEBOLT/ M12X25	63	19
FLANGEBOLT/ M6X10	52	16
	52	27
	52	38
FLANGEBOLT/ M6X12	29	2
	29	4
FLANGEBOLT/ M6X16	63	17
	64	17
	67	17
FLANGEBOLT/ M8X12	12	3
	63	33
FLANGEBOLT/ M8X16	3	15

Description	Fig.	Key
FLANGEBOLT/ M8X16	4	15
	22	7
	36	6
	39	6
	48	26
	48	31
	52	47
	58	2
	62	2
FLANGEBOLT/ M8X25	16	4
	24	3
	25	3
	26	20
	35	32
	48	22
FLANGEBOLT/ M8X40	17	3
	32	6
FLOOR	62	1
FRAME/ FLOOR COMP	42	9
	43	9
FRAME/ LH COMP	70	1
FRAME/ LOWER COMP	42	6
	43	6
FRAME/ MAIN COMP	42	1
	43	1
FRAME/ RADIATOR COMP	3	16
	4	16
FRAME/ RH COMP	70	8
FRAME/ UPPER COMP	42	13
	43	13
	71	1
FUSE(BLADE/ 32V15A)	67	8
FUSE/ BLADE/ 32V05A	67	6
FUSE/ BLADE/ 32V10A	67	7
FUSE/ BLADE/ 32V20A	67	9
FUSE/ SLOW BLOW 40A	67	5
FUSE/ SLOW BLOW 60A	67	4
FUSE/ SLOWBLOW 50A	67	3
GASKET	5	2
	6	2
	86	1
GASKET/ HMP1/ 008	82	19
GAUGE, OIL LEVEL	16	6
GAUGE/ FUEL ASSY	10	4
GAUGE/ LEBEL	16	5

Description	Fig.	Key
GEAR/ BEVEL/ 09	49	45
GEAR/ BEVEL/ 11	49	28
GEAR/ BEVEL/ 14	21	10
GEAR/ BEVEL/ 15	49	10
GEAR/ BEVEL/ 17	49	31
GEAR/ BEVEL/ 21	49	16
GEAR/ BEVEL/ 35	49	48
GEAR/ HELICAL/ 28	18	1
	18	6
	26	3
GEAR/ HELICAL/ 31	18	4
	26	1
GEAR/ HELICAL/ 31 COMP	27	1
	28	1
GEAR/ INPUT SET	20	1
GEAR/ SPUR/ 24 COMP	20	9
GEAR/ SPUR/ 26 COMP	26	7
GEAR/ SPUR/ 33	26	11
GEAR/ SPUR/ 34	26	13
GEAR/ SPUR/ 40 COMP	27	13
	28	7
GEAR/ SPUR/ 42	21	1
GEAR/ SPUR/ 45 COMP	27	7
	28	13
GRIP	52	17
	52	28
	52	39
	58	3
GRIP/ 4WD	47	7
GRIP/ ORANGE	36	5
GRIP/ THROTTLE	13	2
GROMMET/ 13X17X05	60	5
GROMMET/ 17X21X05	60	2
GROMMET/ 17X21X3	70	4
GROMMET/ 9	63	29
	64	28
GUARD/ HOSE	9	15
GUARD/ RUBBER	46	7
GUARD/ UNDER/ FRONT	44	16
	45	16
GUARD/ UNDER/ REAR	44	18
	45	18
GUIDE/ CHAIN	33	14
GUIDE/ LEVER COMP	52	46
HARNESS/ JOINT ASSY	68	1

Description	Fig.	Key
HARNESS/ LAMP	63	28
	64	27
HARNESS/ LAMP ASSY	65	19
HARNESS/ MAIN ASSY	67	1
HARNESS/ OILPRESSURE	67	21
HOLDER	13	11
	65	4
HORN ASSY	66	17
	66	19
HOSE ASSY	56	24
HOSE/ 07X12X1250 ASSY	9	11
HOSE/ 08X13X300	9	7
HOSE/ 08X13X600	9	5
HOSE/ 290 ASSY	3	12
	4	12
HOSE/ BREATHER	16	9
	16	13
HOSE/ CLEANER/ INLET	7	9
	8	10
HOSE/ CLEANER/ OUTLET/	7	7
	8	7
HOSE/ DRAIN/ MOTER	54	6
HOSE/ FUEL/ 2450 ASSY	9	13
HOSE/ FV-M ASSY	55	54
HOSE/ HYDRO/ 1000 ASSY	55	14
HOSE/ HYDRO/ 1200 ASSY	53	11
	54	17
HOSE/ HYDRO/ 1550 ASSY	55	15
HOSE/ HYDRO/ 1700 ASSY	55	50
HOSE/ HYDRO/ 1800 ASSY	55	6
HOSE/ HYDRO/ 3200 ASSY	41	16
HOSE/ HYDRO/ 600 ASSY	55	11
	56	2
	56	8
HOSE/ HYDRO/ 750 ASSY	53	10
HOSE/ RADIATOR/ IN/ 224	4	8
HOSE/ RADIATOR/ IN/ 235	3	8
HOSE/ RADIATOR/ OUT/ 22	4	9
HOSE/ RADIATOR/ OUT/ 23	3	9
HOSE/ RUBBER	3	34
	3	35
	3	37
	4	34
	4	35
	4	37

Description	Fig.	Key
HOUSING/ AXLE ASSY	49	18
HST/ SFH/ 23 ASSY	19	1
HUB/ 12X22X30	48	8
HUB/ 12X22X97	48	9
HUB/ BRAKE/ SHAFT COMP	35	24
HUB/ PARKING ASSY	36	13
INSULATOR	3	4
	4	4
	57	12
	65	5
	71	11
	71	12
INSULATOR/ 10X10X450	3	3
	4	3
INSULATOR/ 1100	58	5
INSULATOR/ 15	40	5
INSULATOR/ 15X15X280	3	20
	4	20
INSULATOR/ 15X55X03	58	8
INSULATOR/ 16X300	58	7
INSULATOR/ 210	44	5
	45	5
INSULATOR/ 220	3	45
	4	45
INSULATOR/ 240	46	2
	46	5
INSULATOR/ 30X35X150	3	43
	4	43
INSULATOR/ 550	44	4
	45	4
INSULATOR/ 595	58	6
INSULATOR/ 791	3	39
	4	39
INSULATOR/ 90	3	30
	4	30
	44	15
	45	15
INSULATOR/ CHUTE	72	8
INSULATOR/ LAMP	63	21
	64	21
INSULATOR/ MOUNT/ LH	1	4
	2	4
INSULRATOR/ 45X45X90	3	44
	4	44
JOINT BALL M08LH	30	22

Description	Fig.	Key
JOINT BALL M08RH	30	18
KEY	65	16
	65	25
KNOB/ SET/ M06X15	60	7
LABEL/ 4WD	75	5
LABEL/ BATTERY	76	2
	76	12
	77	2
	77	12
LABEL/ BATTERY/ 55B24R	77	13
LABEL/ BATTERY/ 80D26R	76	13
LABEL/ CAUTION	76	1
	76	9
	77	1
	77	9
LABEL/ CAUTION/ L	76	10
	77	10
LABEL/ CE	78	1
LABEL/ CONTROL	75	4
LABEL/ CONTROL/ SHROTT	75	3
LABEL/ CONTROL/ START/	65	18
LABEL/ DIFF	75	2
LABEL/ FUEL	76	3
	77	3
LABEL/ FUSE	67	2
LABEL/ METER	65	22
LABEL/ NOISE/ LWA/ 105	77	14
LABEL/ PANEL	65	23
LABEL/ PARKING	75	1
LABEL/ ROPS	76	11
	77	11
LABEL/ W FAN	76	6
	77	6
LABEL/ W RADIATOR	76	7
	77	7
LABEL/ W STARTER	76	8
	77	8
LABEL/ WARNING/ BELT	76	5
	77	5
LABEL/ WARNING/ HOT	76	4
	77	4
LAMP/ COMBINATION/ REA	63	20
	64	20
LAMP/ HEAD/ LH ASSY	63	5
	64	5

Alpabetical Index

1832-097-100-00

Description	Fig.	Key
LAMP/ HEAD/ RH ASSY	63	10
	64	10
LAMP/ MONITOR ASSY	65	9
LAMP/ NUMBERPLAT SET	63	26
	64	25
LEVER/ ACCELERATOR	13	1
LEVER/ COLLECTOR COMP	52	22
	52	33
LEVER/ LIFT COMP	52	11
LEVER/ PARKING ASSY	36	1
LEVER/ TILT	39	13
LINING/ 13X50X03	13	4
LINKPIN	71	7
MAT/ STEP	62	3
METAL/ 4WD	48	19
METAL/ HST	17	1
METAL/ PTO/ B	26	24
METAL/ PTO/ BLOWER	24	1
	25	1
METAL/ PTO/ MOWER	26	18
METER/ FUEL ASSY	65	3
METER/ HOUR ASSY	65	2
MIRROR ASSY	63	15
	64	15
MOLDING/ FENDER/ LH	73	1
	74	1
MOLDING/ FENDER/ RH	73	2
	74	2
MUDGUARD/ LH COMP	46	1
MUDGUARD/ RH COMP	46	4
MUFFLER COMP	5	1
	6	1
NEEDLE	82	11
NET/ COOLER/ OIL	56	25
NIPPLE, GREASE	23	3
	31	6
	31	20
	35	3
	35	15
	35	26
	49	61
NUT	65	7
	66	24
	66	26
NUT, CASTLE/ M10 P1.25	50	7
NUT, CASTLE/ M16 P=1.5	49	64
NUT, RING	83	5
NUT/ LH/ M08	30	21
	35	36
NUT/ M10	13	7
	39	9
NUT/ M10/ 7T	37	6
	42	15
	43	15
	49	66
NUT/ M12	1	5
	2	5
	30	6
	81	3
NUT/ M12/ 7T	30	32
	42	12
	43	12
NUT/ M12X1.25	50	6
NUT/ M16	57	11
	71	3
NUT/ M6	11	4
	12	6
	55	4
	72	13
NUT/ M8	30	17
	30	19
	30	24
	35	34
	48	28
	54	11
	57	13
	71	13
	72	6
	86	7
NUT/ M8/ 7T	31	35
NUT/ RING	65	17
NUT/ WASHER/ M10	30	10
	47	2
NUT/ WASHER/ M4	10	6
NUT/ WASHER/ M5	66	2
	66	12
NUT/ WASHER/ M6	9	10
	11	5
	12	7
	66	14
NUT/ WASHER/ M6	66	16
	66	18
	66	20
	66	35
	67	16
	69	9
NUT/ WASHER/ M8	3	18
	3	46
	4	18
	4	46
	11	9
	12	11
	30	34
	56	12
	58	10
	66	42
	69	3
	69	6
	69	11
	72	4
OIL SEAL	82	28
O-RING	82	38
O-RING/ 1A, G35	54	8
O-RING/ 1A, G45	54	4
O-RING/ 1A, G50	19	4
O-RING/ 1A, G60	82	31
O-RING/ 1A, G65	48	7
O-RING/ 1A, G70	19	5
O-RING/ 1A, P10A	83	2
O-RING/ 1A, P18	34	9
O-RING/ 1A, P20	71	10
O-RING/ 1A, P24	22	4
	48	24
O-RING/ 1A, P26	16	12
O-RING/ 1A, P44	83	6
O-RING/ 1A, S34	26	17
O-RING/ 1A, S42	41	11
O-RING/ 1A, S50	65	21
O-RING/ 1B, P10	82	39
O-RING/ 1B, P11	54	16
	55	8
	55	10
	55	13
	55	45
	55	49

Description	Fig.	Key
O-RING/1B, P11	55	53
	55	56
	82	23
O-RING/1B, P12	55	35
O-RING/1B, P14	55	31
	55	32
	55	43
	56	10
	56	14
	56	16
	56	18
	56	20
	56	23
	82	22
O-RING/1B, P15	19	6
O-RING/1B, P16	55	20
O-RING/1B, P20	55	22
O-RING/1B, P22	55	19
O-RING/1B, P7	55	36
O-RING/1B, S38	41	10
O-RING/AS568/013	55	23
O-RING/AS568/014	55	24
O-RING/AS568/015	55	25
ORNAMENT/224	74	3
ORNAMENT/235	73	3
ORNAMENT/ISEKI	73	4
	73	5
	74	4
	74	5
ORNAMENT/STEERING	73	6
	74	6
PACKING	3	33
	4	33
	10	10
	49	58
	83	9
PACKING PS-42	53	5
PACKING, OIL PUMP	54	13
PACKING/PISTON	41	3
PACKING/RUBBER	10	5
PACKINGA	10	11
PAD	35	8
PAD/50	9	16
	69	2
PAD/HST	31	2

Description	Fig.	Key
PAD/HST/R	31	16
PAD/PS	40	2
PANEL/SWITCH COMP	65	1
PEDAL/BRAKE COMP	35	7
PEDAL/DIFF COMP	23	1
PEDAL/HST/F COMP	31	1
PEDAL/HST/RH COMP	31	15
PIN ASSY	71	5
PIN, SPLIT/2.5X15	13	10
PIN, SPLIT/2.5X20	14	3
	23	8
	30	36
	31	9
	31	14
	31	25
	31	30
	35	12
	35	20
	35	40
	36	9
	36	18
	47	5
	47	10
	47	14
	50	9
PIN, SPLIT/2.5X25	52	6
	52	45
PIN, SPLIT/2X20	52	14
	52	25
	52	36
PIN, SPLIT/4X30	35	23
	49	65
PIN, SPRING/3X18 W	47	8
PIN, ST	82	32
PIN, ST, B/10X22	16	3
	17	2
	24	2
	25	2
	26	19
	32	5
	32	10
	48	21
PIN, ST, B/8X16	19	3
	21	3
PIN/05X17	52	7

Description	Fig.	Key
PIN/10X101	52	4
PIN/10X141	52	43
PIN/10X21	22	3
PIN/12X75	49	11
PIN/14X63 COMP	53	8
	57	5
PIN/19X124	71	6
PIN/6X42	52	12
	52	23
	52	34
PIN/B	49	23
	49	27
PIN/CAM/BRAKE COMP	34	8
PIN/COUNTER/HST	30	29
PIN/COUNTER/HST COMP	31	31
PIN/GROOVE	35	29
	36	12
PIN/M16X112 COMP	57	7
PIN/PARALLEL/08X32	21	2
PIN/PIVOT COMP	49	60
PIN/SNAP	52	9
	52	20
	52	31
	52	42
PIN/SPRING	49	12
PIN/STRAIGHT	84	11
PINION/BEVEL/09	49	1
PINION/BEVEL/11	49	9
PINION/BEVEL/12	21	8
PIPE, BREATHER	16	8
PIPE/COOLER COMP	56	21
PIPE/FILLER/OIL	16	11
PIPE/PTO/MOWER COMP	55	51
PISTON	85	1
	87	1
PISTON STOPPER	53	3
PISTON/012	53	2
PLATE	10	9
	48	25
PLATE, SWITCH	66	45
PLATE/ADJUST COMP	30	9
PLATE/BACK	85	4
	87	7
PLATE/BRAKE	85	8
PLATE/BRAKE COMP	35	10

Alpabetical Index

1832-097-100-00

Description	Fig.	Key
PLATE/ BUMPER	80	1
PLATE/ CONTROLLER	40	6
PLATE/ COVER	44	7
	45	7
PLATE/ DISC	85	2
PLATE/ DISK	87	6
PLATE/ GUARD/ RADIATOR	3	38
	4	38
PLATE/ I/ 16X1105	31	12
	31	28
PLATE/ I/ 16X217	31	7
	31	23
PLATE/ I/ 19X115	46	8
PLATE/ I/ 19X140	52	29
	52	40
PLATE/ I/ 19X254	52	18
PLATE/ I/ 19X517	36	16
PLATE/ I/ 19X927	35	18
PLATE/ I/ 22X130	10	3
PLATE/ L/ 220X30	12	2
PLATE/ PARKING COMP	36	7
PLATE/ SEPARATER	85	3
	87	5
PLATE/ SPRING	82	16
PLATE/ SWASH/ HMP1/ 006	82	4
PLATE/ SWITCH COMP	66	40
PLATE/ THRUST/ HMP1/ 00	82	10
PLATE/ U/ 70X85	63	22
	64	22
PLATE/ VALVE/ MOTOR	82	6
PLATE/ VALVE/ PUMP	82	5
PLUG	65	8
PLUG(G3/ 8)	82	20
PLUG(PF1/ 4)	55	2
	82	21
PLUG, CAP/ 62X6	82	27
PLUG/ 52X10	49	40
	49	44
PLUG/ M12X1.25	82	36
PLUG/ SCREW	55	37
PLUG/ SCREW R1/ 4	49	42
PLUG/ SCREW SEAL	16	7
	32	2
	32	4
	48	4

Description	Fig.	Key
PLUG/ SCREW SEAL	48	20
	49	59
	55	26
	82	40
POPPET/ 1.3	55	29
POPPET/ CHECK/ 0.5	82	17
POPPET/ CHECK/ 0.9X2	82	18
POPPET/ RELIEF	82	15
PRESSURE/ BRAKE	87	12
PUMP/ FUEL ASSY	9	9
PUNP/ GEAR/ 5.2/ L ASSY	54	10
R.B.B/ 6908/ KOYO	49	35
RACKEND ASSY	50	3
RADIATOR ASSY	3	1
	4	1
RBB/ FLANGE	35	30
RELAY ASSY	66	1
	66	3
	66	11
RELAY/ 5P ASSY	66	5
	66	6
	66	7
	66	8
	66	9
	66	10
RELAY/ FLASHER/ EEC	66	15
RELIEFVALVE/ 090 ASSY	55	27
RESERVETANK ASSY	3	31
	4	31
RESISTER/ 8	67	12
RING	71	9
RING, SNAP/ 16 C	34	3
RING, SNAP/ 17 C	26	10
RING, SNAP/ 18 C	30	14
	30	28
RING, SNAP/ 20 C	27	3
	27	12
	28	3
	28	12
RING, SNAP/ 22 C	23	5
	31	22
	34	10
	35	5
	35	17
RING, SNAP/ 25 C	33	10

Description	Fig.	Key
RING, SNAP/ 25 C	82	24
RING, SNAP/ 30 C	20	5
	33	21
	87	10
RING, SNAP/ 32 C	82	26
RING, SNAP/ 34 C	26	15
RING, SNAP/ 45 C	48	5
RING, SNAP/ 47 C	48	18
RING, SNAP/ 52 C	26	29
	33	3
	33	7
RING, SNAP/ R62	20	14
RING, SNAP/ R72	25	4
	27	16
	28	16
RING/ 22	27	9
	28	9
RING/ 25	27	8
	28	8
RING/ 36	50	5
RING/ BACK UP	53	6
RING/ BRAKE	84	4
RING/ O	85	12
	87	2
	87	3
RING/ O/ 1A/ G90	49	21
	49	25
RING/ SEAL	85	6
RING/ SNAP	85	5
	85	9
RING/ SNAP/ A	84	2
RING/ SNAP/ B	84	12
RING/ SNAP/ CR52	49	6
	49	39
	49	43
RING/ SNAP/ CR62	49	30
	49	37
RING/ SNAP/ CS25	49	4
RING/ SNAP/ CS40	49	17
	49	36
RING/ SNAP/ CS50	49	15
RING/ SNAP/ R62	33	16
	82	25
RIVET/ SCREW ASSY	62	4
ROD	36	2

Description	Fig.	Key
ROD PACKING	41	5
	41	8
ROD/127 COMP	39	11
ROD/4WD	47	6
ROD/M08X110 COMP	30	20
ROD/M08X120	35	33
ROD/M08X47	30	16
ROD/M08X72/LH	35	37
ROD/PISTON	41	2
RODEND/137 ASSY	50	1
RODEND/B ASSY	50	2
RUBBER, CUSHION	60	9
S.WLH/M12	72	17
SCREW	86	3
SCREW, SEMS/M5X16	70	7
SCREW, SOCKET/M10X35	82	33
SCREW, SP/M6X12	3	27
	4	27
SCREW, SP/M6X20	58	4
SCREW M03X20	66	44
SCREW M5X12	66	4
SCREW M6X20	63	31
SCREW SOCKET	15	2
SCREW SOCKET/M8X16	82	41
SCREW TAPPING	65	10
SCREW TAPPING/3.5X13	65	27
SCREW TRUSS/M06X16	65	24
SCREW TRUSS/M08X20	59	3
SEAL(62)	20	15
SEAL, OIL	27	17
	28	17
SEAL, OIL/TC20357	48	17
SEAL, OIL/TC20408	33	17
SEAL, OIL/TC20428	18	3
SEAL, OIL/TC25458	48	6
SEAL, OIL/TC30458	33	4
	33	8
SEAL/OIL	26	16
	33	18
	49	7
SEAL/OIL ASSY	49	33
	49	50
SEAL/RING/45X03	87	14
SEAT ASSY	61	1
SENSOR/STRAWL/165	66	36

Description	Fig.	Key
SHAFT, DIFF. PINION	21	7
SHAFT/100	49	56
SHAFT/450	49	55
SHAFT/465	26	21
SHAFT/4WD ASSY	48	1
SHAFT/BRAKE COMP	35	21
SHAFT/DIFF/LH	33	1
SHAFT/DIFF/RH	33	5
SHAFT/INPUT SET	15	1
SHAFT/MOTOR/HMP1/008	82	8
SHAFT/OUTPUT	48	15
SHAFT/PTO	26	26
SHAFT/PUMP/HMP1/008	82	7
SHAFT/WHEEL	49	47
SHAFT/WHEEL COMP	33	19
SHIM	20	7
SHIM/0.1	20	11
SHIM/0.2	20	8
	20	12
SHIM/0.3	5	8
	6	8
SHIM/0.6/B	5	7
	6	7
SHOE/BRAKE	84	5
SHROUD COMP	3	2
	4	2
SLEEVE ASSY	48	14
SNAPRING	87	8
SNAPRING/85	87	13
SPOOL	82	35
SPRING	3	28
	4	28
	36	3
	84	6
	85	10
	87	4
SPRING, DISK	13	5
SPRING, TENSION	34	6
SPRING, VALVE	83	1
SPRING/A	84	9
SPRING/HC021	82	14
SPRING/HC023	82	37
SPRING/HC030	82	13
SPRING/HC045	55	28
SPRING/HC058	72	11

Description	Fig.	Key
SPRING/HE060	35	38
SPRING/HE068	48	27
SPRING/HE073	22	5
SPRING/HE095	35	6
SPRING/HE108	30	15
SPRING/PLATE	52	15
	52	26
	52	37
SPROCKET/11	33	9
SPROCKET/29	33	12
STAY/CASE COMP	32	12
STAY/COLLECTOR/LH	42	19
STAY/COLLECTOR/RH	42	20
STAY/CONTROLLER	69	8
STAY/COVER/SIDE/P	29	1
STAY/CYLINDER	41	12
STAY/DEFFCABLE	22	6
STAY/FENDER	60	8
STAY/GUARD/CONTAINER	42	17
	43	17
STAY/LAMP/FRONT COMP	63	1
	64	1
STAY/PLUG	3	14
	4	14
STAY/ROCK	39	10
STAY/SWITCH/HST COMP	66	31
STOPPER/B	63	30
STUD/M10X20/7T	33	22
	42	5
	43	5
STUD/M12X32/7T	42	4
	43	4
SWITCH/BEACON ASSY	65	13
SWITCH/COMBINATION	65	26
SWITCH/HAZARD ASSY	65	14
SWITCH/LEVER ASSY	66	28
	66	32
	66	38
	66	46
SWITCH/LIMIT ASSY	66	43
SWITCH/MAIN ASSY	65	15
SWITCH/PTO ASSY	65	11
	65	12
SWITCH/PUSH ASSY	66	23
	66	25

Alpabetical Index

1832-097-100-00

Description	Fig.	Key
TANK/ FUEL	10	1
TIRE/ 23X10.5-12 ASSY	37	1
TIRE/ F/ 18X8.50- ASSY	51	1
TIRE/ TURF/ 18X8.50-8	51	2
TOOL/ FUSE	67	10
TRAY/ BOTTLE	70	5
TRIM/ 140	69	4
TRIM/ 188	3	29
	4	29
TRIM/ 198	3	40
	4	40
TRIM/ 230	44	3
	44	10
	45	3
	45	10
TRIM/ 70	63	24
	64	23
TUBE/ 07X09X30	3	21
	4	21
TUBE/ 540 COMP	26	23
TURNBUCKLE/ M8	35	35
TYRE/ TURF/ 23-12	37	2
UNIT/ TIMER ASSY	66	13
U-NUT	3	24
	4	24
	46	9
	72	10
UNUT(M8)	63	9
	63	14
	64	9
	64	14
U-NUT/ M10X1.5	63	3
	64	3
VALVE	7	5
	8	5
VALVE/ 1S-2D ASSY	55	1
VALVE/ 282 ASSY	55	17
VALVE/ CHECK ASSY	56	17
VALVE/ PRV/ B ASSY	55	21
VALVE/ REDUCE/ 21 SET	55	18
VALVE/ RELIEF/ 00 SET	82	34
VIS	83	3
WASHER	65	6
	84	1
	85	11
WASHER	86	4
	87	9
WASHER, PL/ M10	13	6
	37	4
	47	4
	48	10
	52	5
	52	44
WASHER, PL/ M12	1	7
	2	7
	63	25
	64	24
	80	4
WASHER, PL/ M14	51	4
WASHER, PL/ M16	49	63
	57	9
	71	4
WASHER, PL/ M22	23	4
	31	21
	35	4
	35	16
	35	22
WASHER, PL/ M5	52	8
WASHER, PL/ M6	13	9
	23	2
	31	5
	31	19
	35	2
	35	14
	35	25
	47	13
	52	13
	52	24
	52	35
	72	9
WASHER, PL/ M8	9	4
	14	2
	23	7
	30	35
	31	8
	31	13
	31	24
	31	29
	35	11
	35	19
WASHER, PL/ M8	35	39
	36	8
	36	17
	47	9
	47	12
	52	19
	52	30
	52	41
	55	41
	86	5
WASHER, PULLEY	72	18
	79	5
WASHER, SP/ M10	5	4
	6	4
	37	5
	42	14
	43	14
	48	11
	50	8
WASHER, SP/ M12	1	6
	2	6
	30	5
	30	31
	42	11
	43	11
	79	4
	79	8
	80	3
WASHER, SP/ M14	51	5
WASHER, SP/ M16	57	10
	70	3
	70	10
WASHER, SP/ M8	9	3
	17	4
	21	4
	30	23
	32	8
	54	12
	55	40
	86	6
WASHER, SUPPORT	30	30
WASHER/ 05X20X01	70	6
WASHER/ 17X22X03	34	2
WASHER/ 18X26X02	30	13
	30	27

Description	Fig.	Key	Description	Fig.	Key	Description	Fig.	Key
WASHER/ 24X9X3.2	3	25						
	4	25						
WASHER/ 25X42X02	49	3						
WASHER/ 27X36X03	49	49						
WASHER/ 27X79X02	72	15						
WASHER/ 30X46X03	20	4						
WASHER/ 31X42X1	33	20						
WASHER/ 38X12X2	30	3						
WASHER/ 50X62X02	20	13						
WASHER/ 9X32X2	60	3						
WASHER/ A	84	3						
WASHER/ RUBBER	86	2						
WEIGHT/ 15 SET	81	1						
WEIGHT/ 40	79	2						
WEIGHT/ REAR SET	79	1						
WHEEL/ 12XW7 COMP	37	3						
WHEEL/ 8X7 COMP	51	3						
WHEEL/ STEERING ASSY	38	1						
WIRE, LEAD	1	8						
	2	8						