# Directions for use of Parts Catalogue

## 1. Applicable model of machines

All component and option parts used for SF225F, 237F riding mower are listed in this parts catalogue.

1) MODEL TYPE

B····· BLOWER CASE

G····· WITH EXTRA SPECIFICATIONS FOR LOCAL HOMOLOGATION

R····· ROPS

Z····· WITH SEAT

W····· WITH WEIGHT

2····· TURF TIRE

2) AREA CODE

E4····· EUROPE

## 2. Details of the Structure Table of Model

***** Structure Table of Model *****

| MODEL / FIG. | SF310 FHUXWE4 | SF370 FHUXWE4 | | | | | | | | | |
|---|---|---|---|---|---|---|---|---|---|---|---|
| 1 | *** | *** | | | | | | | | | |
| 2 | * | * | | | | | | | | | |
| 3 | | *** | | | | | | | | | |
| 4 | *** | | | | | | | | | | |
| 5 | | *** | | | | | | | | | |
| 6 | *** | | | | | | | | | | |
| 7 | *** | *** | | | | | | | | | |
| 8 | | | | | | | | | | | |

①

③

②

① FIG. : Parts structure of the machine is classified by its functions. FIG. number corresponds to the number written at the top of the parts illustration.

② Model : Shows the name of the model.

③ Structure Table : Shows which functions are originally equipped or can be equipped afterwards for each machines

`*´ Standard Parts

`T´ Optional Parts

`R´ Repair Parts (parts which can only be used for repairs)

## 3. Explanation for head paragraph

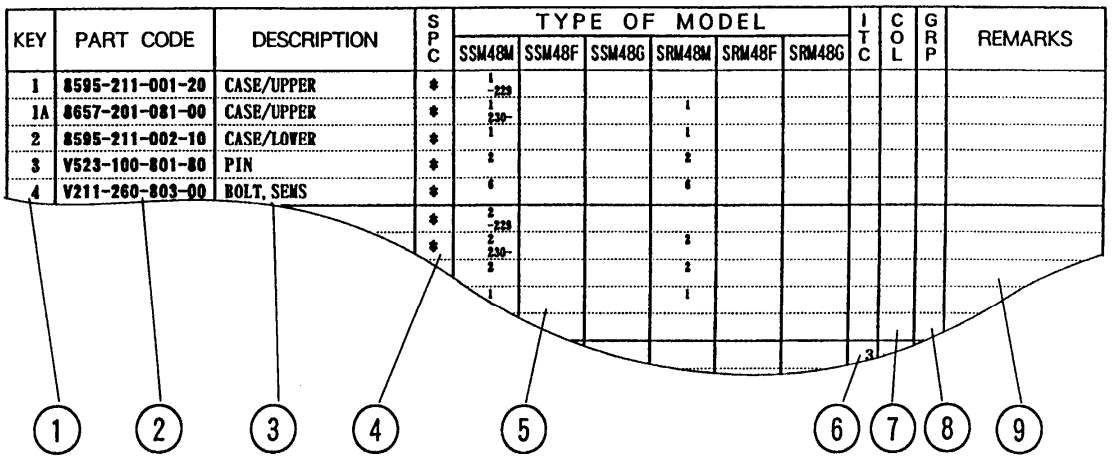


① KEY shows the location of parts diagramed in the illustration.

② Parts numbers begin with `V´ and `W´ are standard parts of the market.

③ `LH´ and `RH´ on the parts name are described against the moving direction of the machine or are described on the condition how to install parts on the machines.

④ SPC : The following symbol classifies parts to be used for machines.

`*´ means standard parts.

`T´ shows that the parts can be installed as optional parts.

`R´ shows that the parts can be used as applicable parts to replace originally equipped parts.

⑤ Upper column : QTY shows the number of parts to be used for one unit of machine.

`m´ is indicated for parts supplied by a meter long.

`AR´ is indicated for parts need to be adjusted or regulated.

Lower column : serial number

－229 means serial number up to 229.

230－ means serial number 230 and after.

⑥ ITC : Interchangeability

`1´…OLD ← NEW

New parts can be used in place of the old parts.

`2´…OLD → NEW

Old parts can be used in place of the new parts.

`3´…OLD →← NEW

Old parts and new parts can not be replaced each other.

⑦ COL : Color code

Color is signified with color code number for colored parts.

Please see the color list shown in the next page.

⑧ GRP : Parts shown in this column can be replaced by SET parts.

Example : Parts marked Ⓐ can be replaced by parts marked Ⓑ, and Ⓓ for Ⓒ, so the rest follow in the same alphabetical order.

⑨ Remarks

＊Other maker's part code number is shown in this column.

＊When Fig. No. is shown in the Remark column of SET parts or ASSY parts, each of their component parts are listed in said Fig. No.

## 4. Color :

The following colors are used color parts.

| COLOR CODE | COLOR | SPRAY TYPE PARTS CODE | PAINTS 4K DRUM PARTS CODE | PAINTS 16K DRUM PARTS CODE |
|---|---|---|---|---|
| 4L | NEO BLUE | 1300-985-001-20 | 1300-985-003-00 | ——— |
| 6G | SUMMER WHITE | 1300-958-001-20 | 1300-958-003-00 | ——— |
| 7F | MIRROR BLACK | 1300-954-001-20 | 1300-954-003-00 | 1300-954-004-00 |

NOTE : Color code is signified only for the parts assigned by the maker as color parts.

5. Serial Numbers :

1) For engines serial number is stamped on CYLINDER BLOCK ASSY.
   Please see Fig. No. 6-1,8-1.

2) For chassies serial number is shown on the LABEL.
   Please see

6. Parts Order

1) When you order parts, please make sure of correct numbers.

2) When substitute parts is available, the part number ordered will be automatically turned to a new part number.

3) Please be sure to use “ISEKI GENUINE PARTS”.
   Any other similar parts other than ISEKI parts when used may cause a trouble that makes us unable to repair or guarantee the warrant.

# *** Structure Table of Model ***

| MODEL / FIG. | SF225F BGRE42 BGZRE42 GWZRE42 SF237F | BGRE42 BGZRE42 GWZRE42 | | | | | | | | | |
|---|---|---|---|---|---|---|---|---|---|---|---|
| 1 | | *** | | | | | | | | | |
| 2 | *** | | | | | | | | | | |
| 3 | | *** | | | | | | | | | |
| 4 | *** | | | | | | | | | | |
| 5 | *** | | | | | | | | | | |
| 6 | | *** | | | | | | | | | |
| 7 | *** | | | | | | | | | | |
| 8 | | *** | | | | | | | | | |
| 9 | *** | | | | | | | | | | |
| 10 | *** | | | | | | | | | | |
| 11 | | *** | | | | | | | | | |
| 12 | *** | | | | | | | | | | |
| 13 | | *** | | | | | | | | | |
| 14 | | *** | | | | | | | | | |
| 15 | *** | | | | | | | | | | |
| 16 | *** | | | | | | | | | | |
| 17 | | *** | | | | | | | | | |
| 18 | *** | | | | | | | | | | |
| 19 | *** | | | | | | | | | | |
| 20 | *** | *** | | | | | | | | | |
| 21 | *** | *** | | | | | | | | | |
| 22 | *** | *** | | | | | | | | | |
| 23 | *** | *** | | | | | | | | | |
| 24 | *** | *** | | | | | | | | | |
| 25 | *** | *** | | | | | | | | | |
| 26 | *** | *** | | | | | | | | | |
| 27 | *** | *** | | | | | | | | | |
| 28 | *** | *** | | | | | | | | | |
| 29 | *** | *** | | | | | | | | | |
| 30 | ** | ** | | | | | | | | | |
| 31 | * | * | | | | | | | | | |
| 32 | *** | *** | | | | | | | | | |
| 33 | | ** | | | | | | | | | |
| 34 | ** | | | | | | | | | | |
| 35 | *** | *** | | | | | | | | | |
| 36 | *** | *** | | | | | | | | | |
| 37 | *** | *** | | | | | | | | | |
| 38 | *** | *** | | | | | | | | | |
| 39 | *** | *** | | | | | | | | | |
| 40 | *** | *** | | | | | | | | | |
| 41 | *** | *** | | | | | | | | | |
| 42 | *** | *** | | | | | | | | | |
| 43 | *** | *** | | | | | | | | | |
| 44 | | *** | | | | | | | | | |
| 45 | *** | | | | | | | | | | |

# *** Structure Table of Model ***

| MODEL / FIG. | S S F F 2 B B G 2 2 G G W 3 5 R Z Z 7 F E R R F 4 E E 2 4 4 2 2 | B B G G G W R Z Z E R R 4 E E 2 4 4 2 2 | | | | | | | | | |
|---|---|---|---|---|---|---|---|---|---|---|---|
| 46 | *** | | | | | | | | | | |
| 47 | | *** | | | | | | | | | |
| 48 | *** | *** | | | | | | | | | |
| 49 | *** | *** | | | | | | | | | |
| 50 | *** | *** | | | | | | | | | |
| 51 | | *** | | | | | | | | | |
| 52 | *** | | | | | | | | | | |
| 53 | | ** | | | | | | | | | |
| 54 | | * | | | | | | | | | |
| 55 | ** | | | | | | | | | | |
| 56 | * | | | | | | | | | | |
| 57 | *** | *** | | | | | | | | | |
| 58 | *** | *** | | | | | | | | | |
| 59 | *** | | | | | | | | | | |
| 60 | | *** | | | | | | | | | |
| 61 | *** | *** | | | | | | | | | |
| 62 | *** | *** | | | | | | | | | |
| 63 | *** | *** | | | | | | | | | |
| 64 | *** | *** | | | | | | | | | |
| 65 | *** | *** | | | | | | | | | |
| 66 | | *** | | | | | | | | | |
| 67 | *** | | | | | | | | | | |
| 68 | *** | *** | | | | | | | | | |
| 69 | | *** | | | | | | | | | |
| 70 | *** | | | | | | | | | | |
| 71 | *** | *** | | | | | | | | | |
| 72 | *** | *** | | | | | | | | | |
| 73 | *** | *** | | | | | | | | | |
| 74 | *** | *** | | | | | | | | | |
| 75 | T** | T** | | | | | | | | | |
| 76 | *** | *** | | | | | | | | | |
| 77 | | ** | | | | | | | | | |
| 78 | * | * | | | | | | | | | |
| 79 | ** | | | | | | | | | | |
| 80 | | *** | | | | | | | | | |
| 81 | *** | | | | | | | | | | |
| 82 | | ** | | | | | | | | | |
| 83 | | * | | | | | | | | | |
| 84 | ** | | | | | | | | | | |
| 85 | * | | | | | | | | | | |
| 86 | | *** | | | | | | | | | |
| 87 | *** | | | | | | | | | | |
| 88 | *** | | | | | | | | | | |
| 89 | | *** | | | | | | | | | |
| 90 | | *** | | | | | | | | | |

# *** Structure Table of Model ***

| MODEL / FIG. | SF225F | BGRE42 | BGZRE42 | GWZRE42 | SF237F | BGRE42 | BGZRE42 | GWZRE42 | | | | | | | | | |
|---|---|---|---|---|---|---|---|---|---|---|---|---|---|---|---|---|---|
| 91 | * | * | * | | | | | | | | | | | | | | |
| 92 | * | * | * | | * | * | * | | | | | | | | | | |
| 93 | * | * | | | | | | | | | | | | | | | |
| 94 | | | | | * | * | | | | | | | | | | | |
| 95 | | | | | * | * | * | | | | | | | | | | |
| 96 | * | * | * | | | | | | | | | | | | | | |
| 97 | * | * | * | | * | * | * | | | | | | | | | | |
| 98 | | | | | * | * | * | | | | | | | | | | |
| 99 | * | * | * | | | | | | | | | | | | | | |
| 100 | * | * | * | | * | * | * | | | | | | | | | | |
| 101 | * | * | * | | * | * | * | | | | | | | | | | |
| 102 | * | * | * | | * | * | * | | | | | | | | | | |
| 103 | T | T | * | | T | T | * | | | | | | | | | | |
| 104 | T | T | T | | T | T | T | | | | | | | | | | |
| 105 | T | T | T | | T | T | T | | | | | | | | | | |
| 106 | * | * | * | | * | * | * | | | | | | | | | | |
| 107 | * | * | * | | | | | | | | | | | | | | |
| 108 | * | * | * | | * | * | * | | | | | | | | | | |
| 109 | * | * | | | * | * | | | | | | | | | | | |
| 110 | * | * | * | | * | * | * | | | | | | | | | | |
| 111 | * | * | * | | * | * | * | | | | | | | | | | |
| | | | | | | | | | | | | | | | | | |
| | | | | | | | | | | | | | | | | | |
| | | | | | | | | | | | | | | | | | |
| | | | | | | | | | | | | | | | | | |

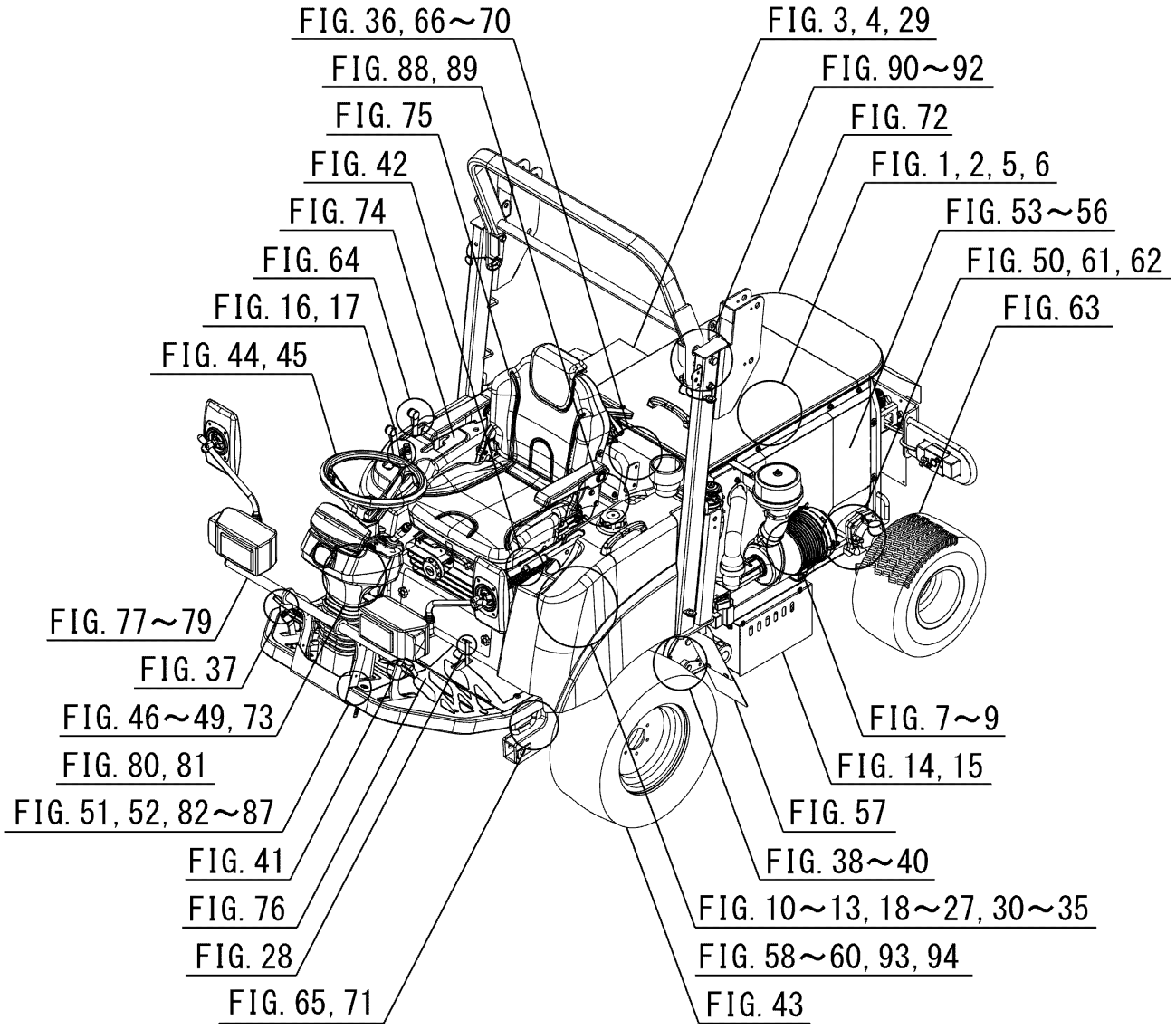
FIG. 36, 66～70
FIG. 88, 89
FIG. 75
FIG. 42
FIG. 74
FIG. 64
FIG. 16, 17
FIG. 44, 45
FIG. 77～79
FIG. 37
FIG. 46～49, 73
FIG. 80, 81
FIG. 51, 52, 82～87
FIG. 41
FIG. 76
FIG. 28
FIG. 65, 71
FIG. 3, 4, 29
FIG. 90～92
FIG. 72
FIG. 1, 2, 5, 6
FIG. 53～56
FIG. 50, 61, 62
FIG. 63
FIG. 7～9
FIG. 14, 15
FIG. 57
FIG. 38～40
FIG. 10～13, 18～27, 30～35
FIG. 58～60, 93, 94
FIG. 43

# Contents

**SF224F**

**ENGINE(E3112-XG02)**

SHORT BLOCK ENGINE ASSY(OPTION)····· Fig. 1
CYLINDER HEAD····· Fig. 2
CYLINDER HEAD COVER····· Fig. 3
INLET MANIFOLD····· Fig. 4
EXHAUST MANIFOLD····· Fig. 5
CYLINDER BLOCK····· Fig. 6
BEARING/UNDER SIZE (OPTION)····· Fig. 7
OIL PAN····· Fig. 8
REAR PLATE····· Fig. 9
TIMING GEAR CASE····· Fig. 10
HANGER····· Fig. 11
VALVE····· Fig. 12
CAM SHAFT····· Fig. 13
PISTON····· Fig. 14
PISTON/OVER SIZE (OPTION)····· Fig. 15
CRANK SHAFT····· Fig. 16
OIL PUMP····· Fig. 17
WATER PUMP····· Fig. 18
COOLING FAN····· Fig. 19
INJECTION NOZZLE····· Fig. 20
INJECTION PUMP····· Fig. 21
FUEL PIPE····· Fig. 22
ADAPTER····· Fig. 23
ADAPTER····· Fig. 24

ELECTRIC (1)····· Fig. 25
ELECTRIC (2)····· Fig. 26
REPAIR PARTS(OPTION)····· Fig. 27
REPAIR PARTS(OPTION)····· Fig. 28
COMPONENT PARTS
FOR 6215-300-036-10 ON Fig.020····· Fig. 29
COMPONENT PARTS
FOR 6215-600-103-30 ON Fig.021····· Fig. 30
COMPONENT PARTS
FOR 6281-200-015-10 ON Fig.025····· Fig. 31
COMPONENT PARTS
FOR 6281-200-048-00 ON Fig.025····· Fig. 32

# Contents

## SF237F

## ENGINE(E3FH-TDEG01)

SHORT BLOCK ENGINE ASSY(OPTION)····· Fig. 1
CYLINDER HEAD····· Fig. 2
CYLINDER HEAD COVER····· Fig. 3
INLET MANIFOLD····· Fig. 4
INLET MANIFOLD····· Fig. 5
EXHAUST MANIFOLD····· Fig. 6
TURBO CHARGER····· Fig. 7
CYLINDER BLOCK(1/2)(2/2)····· Fig. 8
BEARING/UNDER SIZE (OPTION)····· Fig. 9
OIL PAN····· Fig. 10
REAR PLATE····· Fig. 11
TIMING GEAR CASE····· Fig. 12
HANGER····· Fig. 13
VALVE····· Fig. 14
CAM SHAFT····· Fig. 15
PISTON····· Fig. 16
PISTON/OVER SIZE (OPTION)····· Fig. 17
CRANK SHAFT····· Fig. 18
OIL PUMP····· Fig. 19
WATER PUMP····· Fig. 20
COOLING FAN····· Fig. 21
INJECTION NOZZLE····· Fig. 22
INJECTION PUMP····· Fig. 23
FUEL FILTER····· Fig. 24

FUEL PIPE……Fig. 25
ELECTRIC (1)…… Fig. 26
ELECTRIC (2)…… Fig. 27
ELECTRIC (3)…… Fig. 28
LABEL/NAME……Fig. 29
MUFFLER…… Fig. 30
REPAIR PARTS(OPTION)…… Fig. 31

# Contents

## CHASSIS

BRACKET(ENGINE)SYSTEM(237F)……Fig. 1
BRACKET(ENGINE)SYSTEM(225F)……Fig. 2
RADIATOR SYSTEM(237F)……Fig. 3
RADIATOR SYSTEM(225F)……Fig. 4
MUFFLER SYSTEM(225F)……Fig. 5
MUFFLER SYSTEM(237F)……Fig. 6
CLEANER(AIR)SYSTEM(225F)(NO.1-816)……Fig. 7
CLEANER(AIR)SYSTEM(237F)……Fig. 8
CLEANER(AIR)SYSTEM(225F)(NO.817-)……Fig. 9
PIPING(FUEL)SYSTEM(225F)……Fig. 10
PIPING(FUEL)SYSTEM(237F)……Fig. 11
TANK(FUEL)SYSTEM(225F)……Fig. 12
TANK(FUEL)SYSTEM(237F)……Fig. 13
BATTERY SYSTEM(237F)……Fig. 14
BATTERY SYSTEM(225F)……Fig. 15
LEVER(ACCELERATOR)SYSTEM(225F)……Fig. 16
LEVER(ACCELERATOR)SYSTEM(237F)……Fig. 17
CABLE(ACCELERATOR)SYSTEM(225F)……Fig. 18
SHAFT(INPUT)SET SYSTEM(225F)(NO.1-147)……Fig. 19
SHAFT(INPUT)SET SYSTEM(225F-NO.148-)……Fig. 20
CASE(TRANSMISSION)SYSTEM……Fig. 21
METAL(HST)SYSTEM……Fig. 22
GEAR(INPUT)SYSTEM……Fig. 23
HST SYSTEM……Fig. 24
GEAR(INPUT)SET SYSTEM……Fig. 25
CASE(DIFFERENTIAL)SYSTEM……Fig. 26
DIFF-LOCK SYSTEM……Fig. 27

PEDAL(DIFF-LOCK)SYSTEM····· Fig. 28
HST SYSTEM·····Fig. 29
METAL(PTO/BLOWER)SYSTEM(B TYPE)·····Fig. 30
METAL(PTO/BLOWER)SYSTEM(EXCEPT B TYPE)····· Fig. 31
DRIVE(PTO/SIDE)SYSTEM····· Fig. 32
DRIVE(PTO/BLOWER)SYSTEM(237F-B TYPE)····· Fig. 33
DRIVE(PTO/BLOWER)SYSTEM(225F-B TYPE)····· Fig. 34
DRIVE(PTO/SIDE)SYSTEM····· Fig. 35
LINK(HST)SYSTEM·····Fig. 36
PEDAL(HST)SYSTEM·····Fig. 37
CASE(CHAIN)SYSTEM····· Fig. 38
SHAFT(WHEEL/FRONT)SYSTEM····· Fig. 39
BRAKE SYSTEM····· Fig. 40
PEDAL(BRAKE)SYSTEM····· Fig. 41
BRAKE(PARKING)SYSTEM····· Fig. 42
WHEEL(FRONT)SYSTEM·····Fig. 43
WHEEL(STEERING)SYSTEM(237F)····· Fig. 44
WHEEL(STEERING)SYSTEM(225F)····· Fig. 45
COLUMN(STEERING)SYSTEM(225F)·····Fig. 46
COLUMN(STEERING)SYSTEM(237F)·····Fig. 47
CONTROLLER(STEERING)SET SYSTEM
(225F-NO.1-515/237F-NO.1-797)····· Fig. 48
CYLINDER(STEERING)SYSTEM
(225F-NO.516-/237F-NO.798-)····· Fig. 49
CYLINDER(STEERING)SYSTEM····· Fig. 50
FRAME SYSTEM(237F)·····Fig. 51
FRAME SYSTEM(225F)·····Fig. 52
COVER(SIDE)SYSTEM(237F-B TYPE)····· Fig. 53
COVER(SIDE)SYSTEM(237F EXCEPT B)····· Fig. 54
COVER(SIDE)SYSTEM(225F-B TYPE)····· Fig. 55
COVER(SIDE)SYSTEM(225F EXCEPT B)····· Fig. 56
MUD GUARD SYSTEM·····Fig. 57
LEVER(4WD)SYSTEM·····Fig. 58

AUTO(4WD)SYSTEM(225F)····· Fig. 59
AUTO(4WD)SYSTEM(237F)····· Fig. 60
HOUSING(AXLE/REAR)SYSTEM(1/3)-(3/3)····· Fig. 61
ROD(TIE)SYSTEM····· Fig. 62
WHEEL(REAR)SYSTEM·····Fig. 63
CONTROL SYSTEM·····Fig. 64
CYLINDER(LIFT)SYSTEM····· Fig. 65
PIPING(PUMP)SYSTEM(237F)·····Fig. 66
PIPING(PUMP)SYSTEM(225F)·····Fig. 67
PIPING(CONTROL)SYSTEM(1/2)(2/2)····· Fig. 68
PIPING(HST)SYSTEM(237F)····· Fig. 69
PIPING(HST)SYSTEM(225F)····· Fig. 70
LINK(LIFT)SYSTEM·····Fig. 71
HOOD SYSTEM····· Fig. 72
COVER(STEERING)SYSTEM····· Fig. 73
FENDER SYSTEM·····Fig. 74
SEAT SYSTEM
(Z TYPE-STANDARD/EXCEPT Z TYPE-OPTION)····· Fig. 75
FLOOR SYSTEM····· Fig. 76
LIGHT SYSTEM(237F-B TYPE)·····Fig. 77
LIGHT SYSTEM(EXCEPT B TYPE)····· Fig. 78
LIGHT SYSTEM(225F-B TYPE)·····Fig. 79
PANEL(SWITCH)SYSTEM(237F)····· Fig. 80
PANEL(SWITCH)SYSTEM(225F)····· Fig. 81
SWITCH SYSTEM(237F-B TYPE)(1/2)(2/2)·····Fig. 82
SWITCH SYSTEM(237F EXCEPT B)(1/2)(2/2)·····Fig. 83
SWITCH SYSTEM(225F-B TYPE)(1/2)(2/2)·····Fig. 84
SWITCH SYSTEM(225F EXCEPT B)(1/2)(2/2)·····Fig. 85
HARNESS SYSTEM(237F)(1/2)(2/2)·····Fig. 86
HARNESS SYSTEM(225F)····· Fig. 87
CONTROLLER SYSTEM(225F)·····Fig. 88
CONTROLLER SYSTEM(237F)·····Fig. 89
FRAME(MAIN)SYSTEM(237F)····· Fig. 90

FRAME(MAIN)SYSTEM(225F)····· Fig. 91
FRAME(UPPER)SYSTEM·····Fig. 92
BLOWER SYSTEM(225F-B TYPE)····· Fig. 93
BLOWER SYSTEM(237F-B TYPE)····· Fig. 94
ORNAMENT(237F)·····Fig. 95
ORNAMENT(225F)·····Fig. 96
LABEL(CONTROL)····· Fig. 97
LABEL(CAUTION)(237F)····· Fig. 98
LABEL(CAUTION)(225F)····· Fig. 99
LABEL(CE)(225F-NO.328-/237F-NO.579-)····· Fig.100
LABEL(CE)(225F-NO.1-327/237F-NO.1-578)····· Fig.101
MANUAL(225F-NO.866-/237F-NO.1237-)····· Fig.102
WEIGHT(REAR)SET SYSTEM
(EXCEPT B TYPE-STANDARD/B TYPE-OPTION)····· Fig.103

## OPTIONAL PARTS

PLATE(BUMPER)&BOLT SYSTEM(OPTION)·····Fig.104
WEIGHT(15)SET(OPTION)····· Fig.105

## COMPONENT PARTS

COMPONENT PARTS
FOR K500-008-000-40 ON Fig.24····· Fig.106
COMPONENT PARTS
FOR 1672-105-210-10 ON Fig.10····· Fig.107
COMPONENT PARTS
FOR 1720-221-210-00 ON Fig.59,60····· Fig.108
COMPONENT PARTS
FOR 1725-219-720-20 ON Fig.33,34····· Fig.109
COMPONENT PARTS
FOR 1772-654-210-00 ON Fig.77,78,79····· Fig.110
COMPONENT PARTS
FOR 1825-127-300-00 ON Fig.32····· Fig.111

## WIRING DIAGRAM

WIRING DIAGRAM(SF225 TYPE)(1/2)
WIRING DIAGRAM(SF225 TYPE)(2/2)
WIRING DIAGRAM(SF237 TYPE)(1/5)
WIRING DIAGRAM(SF237 TYPE)(2/5)
WIRING DIAGRAM(SF237 TYPE)(3/5)
WIRING DIAGRAM(SF237 TYPE)(4/5)
WIRING DIAGRAM(SF237 TYPE)(5/5)

# E N G I N E

## E3112XG02···SF225F

6004-097-800-20

# FIG. 1 SHORT BLOCK ENGINE ASSY(OPTION)

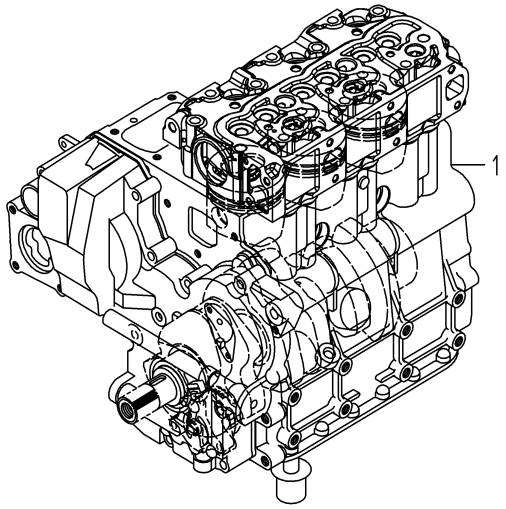


6004-016B-0100

| KEY | PART CODE | DESCRIPTION | SPC | TYPE OF MODEL E3112 XG02 | | ITC | COL | GRP | REMARKS |
|---|---|---|---|---|---|---|---|---|---|
| 1 | 6004-010-170-00 | SHORTBLOCKENGIN ASSY | T | 1 | | | | | |

# FIG. 2 CYLINDER HEAD

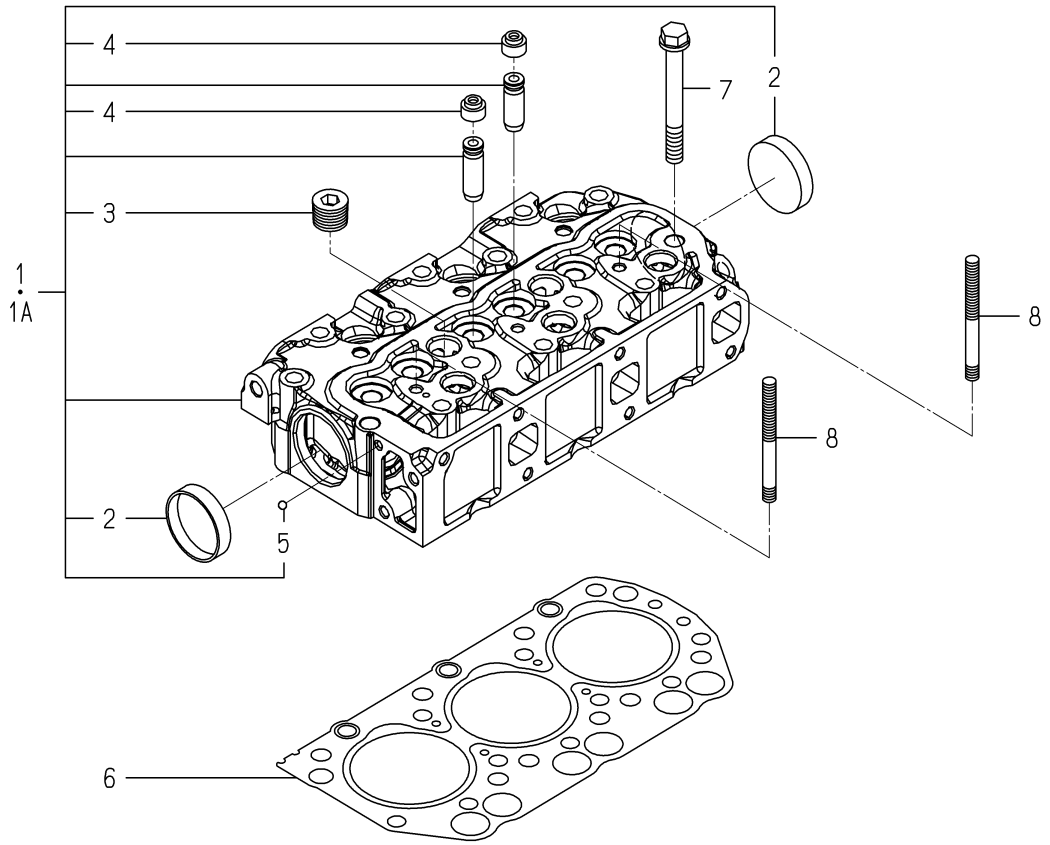


6004-101I-0100,6004-101I-0200

| KEY | PART CODE | DESCRIPTION | SPC | TYPE OF MODEL E3112 XG02 | | ITC | COL | GRP | REMARKS |
|---|---|---|---|---|---|---|---|---|---|
| 1 | 6211-110-114-00 | CYLINDERHEAD ASSY | * | 1 -526687 | | | | | |
| 1A | 6211-110-114-10 | CYLINDERHEAD ASSY | * | 1 526688- | | 1 | | | |
| 2 | 6911-129-006-00 | CAP,SEALING | * | 2 | | | | | |
| 3 | 6209-605-004-10 | PLUG/PT1/2 | * | 5 | | | | | |
| 4 | 6212-569-002-00 | SEAL,OIL | * | 6 | | | | | |
| 5 | V682-200-000-60 | BALL,STEEL | * | 1 | | | | | |
| 6 | 6211-141-029-20 | GASKET/CYLINDERHEAD | * | 1 | | | | | |
| 7 | 6209-000-044-00 | BOLT | * | 14 | | | | | |
| 8 | 6209-300-014-00 | STUD | * | 2 | | | | | |

# FIG. 3 CYLINDER HEAD COVER

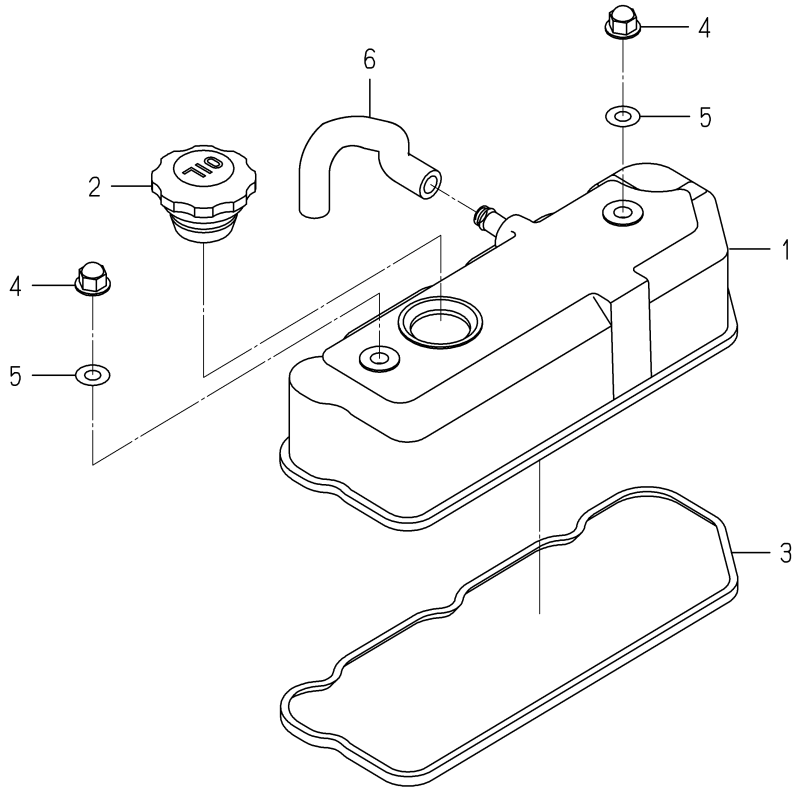


6003-110 -0100

| KEY | PART CODE | DESCRIPTION | SPC | TYPE OF MODEL E3112 XG02 | | ITC | COL | GRP | REMARKS |
|---|---|---|---|---|---|---|---|---|---|
| 1 | 6211-170-004-20 | COVER/CYLINDER HEAD | * | 1 | | | | | |
| 2 | 6211-751-001-10 | CAP,OIL FILLER | * | 1 | | | | | |
| 3 | 6211-173-003-00 | SEAL,CYL.HEAD COVER | * | 1 | | | | | |
| 4 | 6209-490-002-10 | NUT/CAP | * | 2 | | | | | |
| 5 | 6209-572-003-00 | GASKET | * | 2 | | | | | |
| 6 | 6209-360-028-20 | HOSE/RUBBER | * | 1 | | | | | |

# FIG. 4 INLET MANIFOLD

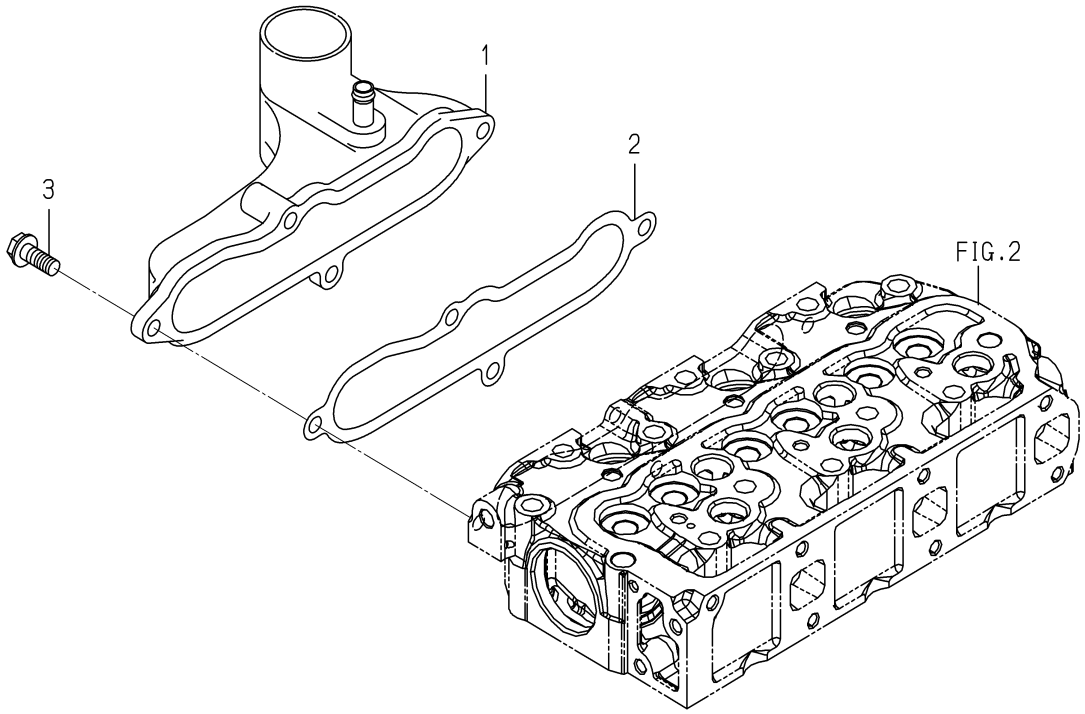


6004-120E-0100

| KEY | PART CODE | DESCRIPTION | SPC | TYPE OF MODEL E3112 XG02 | | ITC | COL | GRP | REMARKS |
|---|---|---|---|---|---|---|---|---|---|
| 1 | 6214-111-011-20 | MANIFOLD(INLET) ASSY | * | 1 | | | | | |
| 2 | 6214-115-001-20 | GASKET,INLET MANIFOL | * | 1 | | | | | |
| 3 | V231-360-802-00 | FLANGEBOLT/M8X20 | * | 3 | | | | | |

# FIG. 5 EXHAUST MANIFOLD

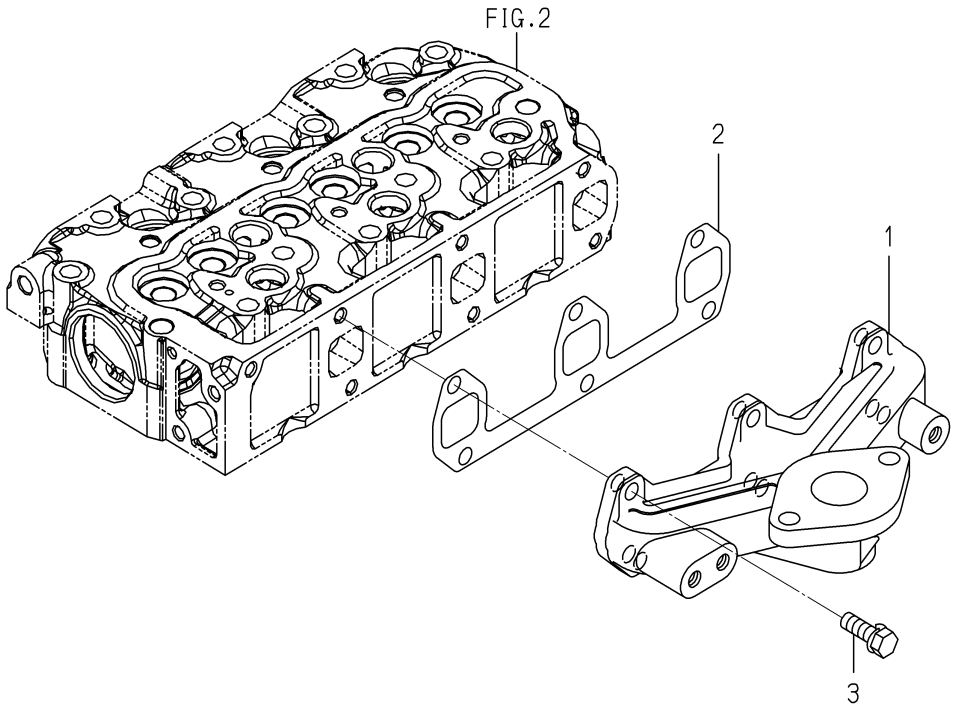


6004-140 -0100

| KEY | PART CODE | DESCRIPTION | SPC | TYPE OF MODEL E3112 XG02 | | ITC | COL | GRP | REMARKS |
|---|---|---|---|---|---|---|---|---|---|
| 1 | 6214-141-010-10 | MANIFOLD,EXH | * | 1 | | | | | |
| 2 | 6214-145-001-30 | GASKET,EXH.MANIFOLD | * | 1 | | | | | |
| 3 | V211-560-802-50 | BOLT,S/M8X25/7T | * | 6 | | | | | |

# FIG. 6 CYLINDER BLOCK

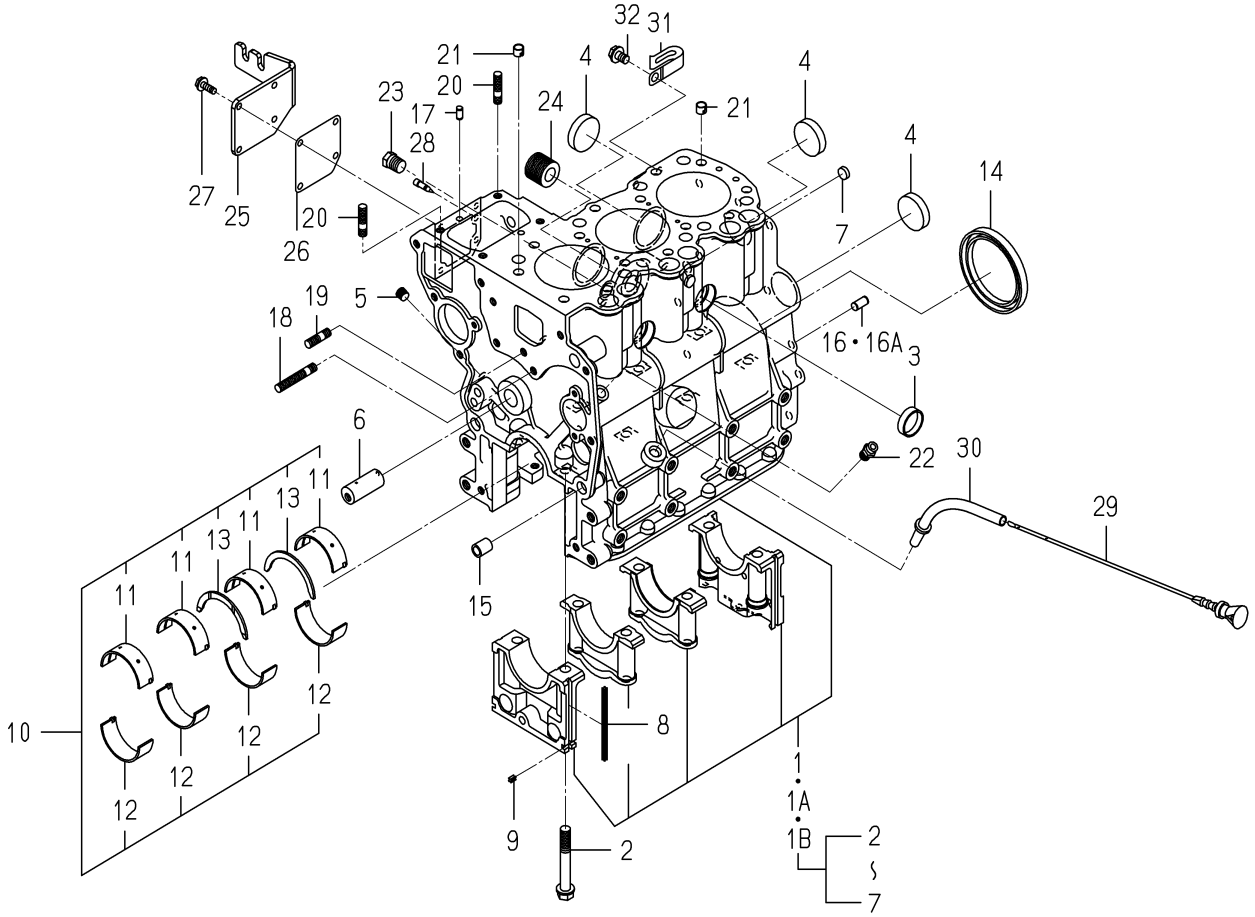


6004-203I-0100

| KEY | PART CODE | DESCRIPTION | SPC | TYPE OF MODEL E3112 XG02 | | ITC | COL | GRP | REMARKS |
|---|---|---|---|---|---|---|---|---|---|
| 1 | 6211-210-113-10 | CYLINDERBLOCK ASSY | * | 1 -516630 | | | | | |
| 1A | 6211-210-113-20 | CYLINDERBLOCK ASSY | * | 1 -526687 | | 1 | | | |
| 1B | 6211-210-113-30 | CYLINDERBLOCK ASSY | * | 1 526688- | | 1 | | | |
| 2 | 6209-000-004-10 | BOLT | * | 8 | | | | | |
| 3 | 6209-610-001-10 | CUP/SEALING/28 | * | 2 | | | | | |
| 4 | 6209-610-009-00 | CUP/SEALING/36 | * | 4 | | | | | |
| 5 | 6209-605-007-10 | PLUG/PT1/8 | * | 3 | | | | | |
| 6 | 6212-531-014-00 | PIN/IDLEGEAR | * | 1 | | | | | |
| 7 | 6209-610-008-00 | CUP/SEALING/12 | * | 2 | | | | | |
| 8 | 6211-258-001-00 | SEAL,BEARING CAP | * | 4 | | | | | |
| 9 | 6211-258-002-00 | SEAL,BEARING CAP/7 | * | 2 | | | | | |
| 10 | 6211-510-021-00 | BEARING/CRANKSET | * | 1 | | | | | |
| 11 | 6211-511-023-00 | BEARING/CRANK/UPPER | * | 4 | | | | | |
| 12 | 6211-511-024-00 | BEARING/CRANK/LOWER | * | 4 | | | | | |
| 13 | 6211-599-012-00 | BEARING/THRUST/CRANK | * | 2 | | | | | |
| 14 | 6209-625-001-00 | SEAL,OIL | * | 1 | | | | | |
| 15 | 6209-749-001-30 | PIN/TUBE | * | 2 | | | | | |
| 16 | 6213-129-006-00 | PIN/STRAIGHT | * | 1 -554072 | | | | | |
| 16A | V523-100-801-60 | PIN,ST,B/8X16 | * | 1 554073- | | | | | |
| 17 | 6209-740-005-00 | PIN | * | 2 | | | | | |
| 18 | 6904-110-840-00 | STUD/M8X40 | * | 1 | | | | | |
| 19 | 6904-110-818-00 | STUD | * | 1 | | | | | |
| 20 | 6904-110-822-00 | STUD | * | 2 | | | | | |
| 21 | 6294-453-002-00 | DOWEL | * | 2 | | | | | |
| 22 | 6909-902-299-00 | NIPPLE | * | 1 | | | | | |
| 23 | V782-160-000-4T | PLUG/SCREW/SEAL | * | 1 | | | | | |
| 24 | 6213-319-001-00 | CONNECTOR,OIL FILTER | * | 1 | | | | | |
| 25 | 6211-291-038-00 | COVER/INJECTIONPUMP | * | 1 | | | | | |
| 26 | 6211-292-009-00 | GASKET/COVER | * | 1 | | | | | |
| 27 | V230-360-601-20 | FLANGEBOLT/M6X12 | * | 4 | | | | | |

# FIG. 6 CYLINDER BLOCK

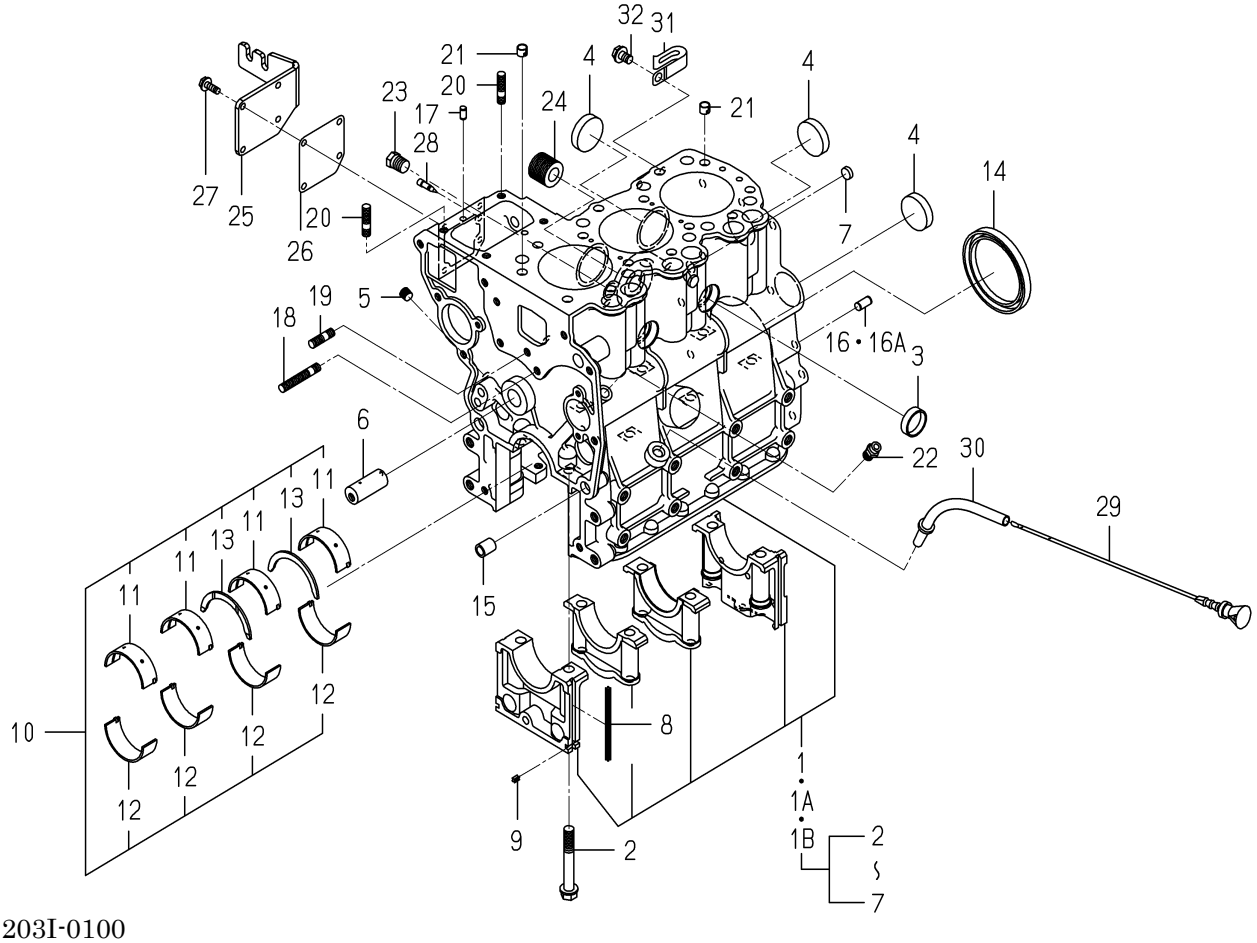


6004-203I-0100

| KEY | PART CODE | DESCRIPTION | SPC | TYPE OF MODEL E3112 XG02 | | ITC | COL | GRP | REMARKS |
|---|---|---|---|---|---|---|---|---|---|
| 28 | 6215-549-013-00 | PIN | * | 1 | | | | | |
| 29 | 6211-760-035-20 | LEVELGAGE | * | 1 | | | | | |
| 30 | 6211-766-025-00 | GUIDE/LEVELGAGE COMP | * | 1 | | | | | |
| 31 | 1425-621-004-00 | HOLDER/JE/9-9 | * | 1 | | | | | |
| 32 | V231-360-801-20 | FLANGEBOLT/M8X12 | * | 1 | | | | | |

# FIG. 7 BEARING/UNDER SIZE (OPTION)

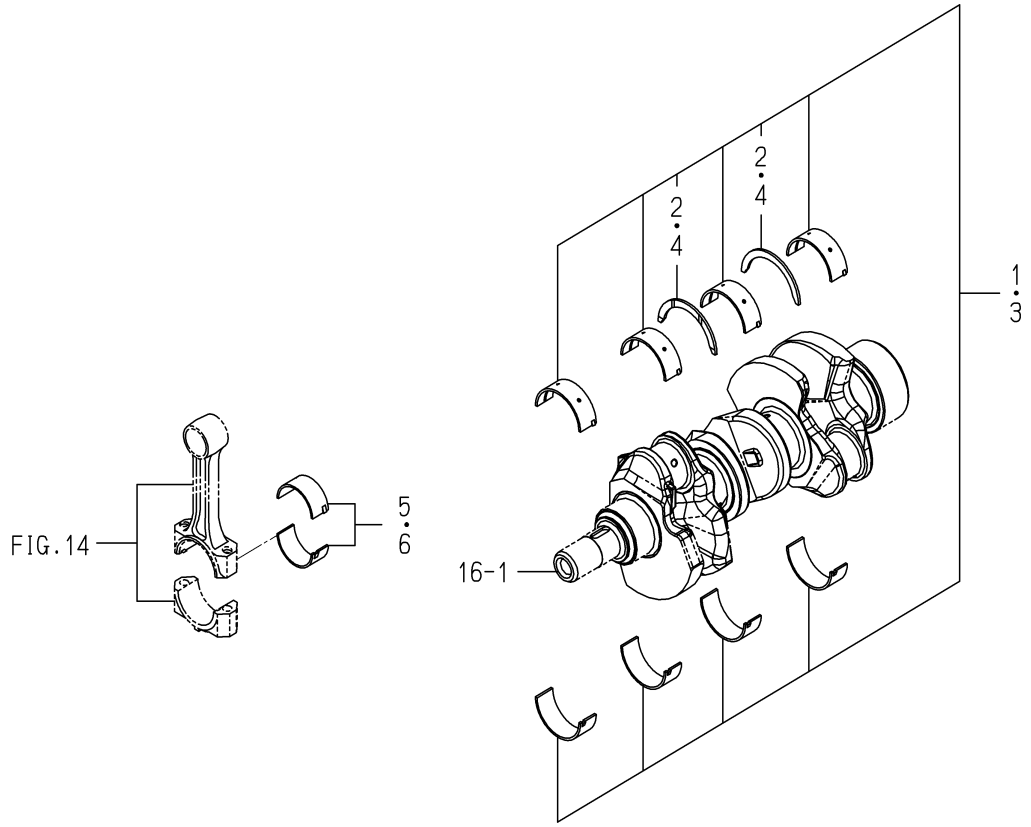


6003-209 -0100

| KEY | PART CODE | DESCRIPTION | SPC | TYPE OF MODEL E3112 XG02 | | ITC | COL | GRP | REMARKS |
|---|---|---|---|---|---|---|---|---|---|
| 1 | 6211-540-018-00 | BRG/CRANK/UN050 SET | T | 1 | | | | | |
| 2 | 6211-599-012-00 | BEARING/THRUST/CRANK | T | 2 | | | | | |
| 3 | 6211-560-007-00 | BRG/CRANK/UN100 SET | T | 1 | | | | | |
| 4 | 6211-599-012-00 | BEARING/THRUST/CRANK | T | 2 | | | | | |
| 5 | 6212-274-016-00 | BRG/CONROD/UN050 SET | T | 3 | | | | | |
| 6 | 6212-276-016-00 | BRG/CONROD/UN100 SET | T | 3 | | | | | |

# FIG. 8 OIL PAN

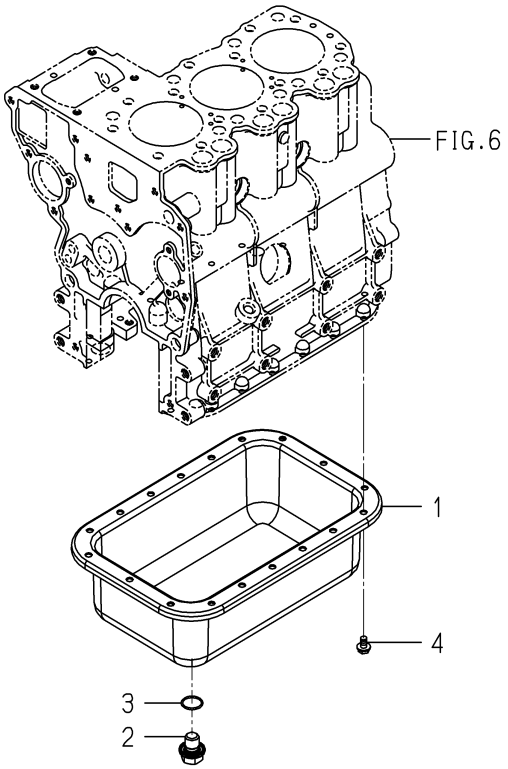


6004-210M-0100

| KEY | PART CODE | DESCRIPTION | SPC | TYPE OF MODEL E3112 XG02 | | ITC | COL | GRP | REMARKS |
|---|---|---|---|---|---|---|---|---|---|
| 1 | 6211-361-104-00 | OILPAN COMP | * | 1 | | | | | |
| 2 | 3805-355-002-20 | PLUG/M14X1.5 | * | 1 | | | | | |
| 3 | V720-102-401-80 | O-RING/1A,P18 | * | 1 | | | | | |
| 4 | V230-360-601-00 | FLANGEBOLT/M6X10 | * | 18 | | | | | |

# FIG. 9 REAR PLATE

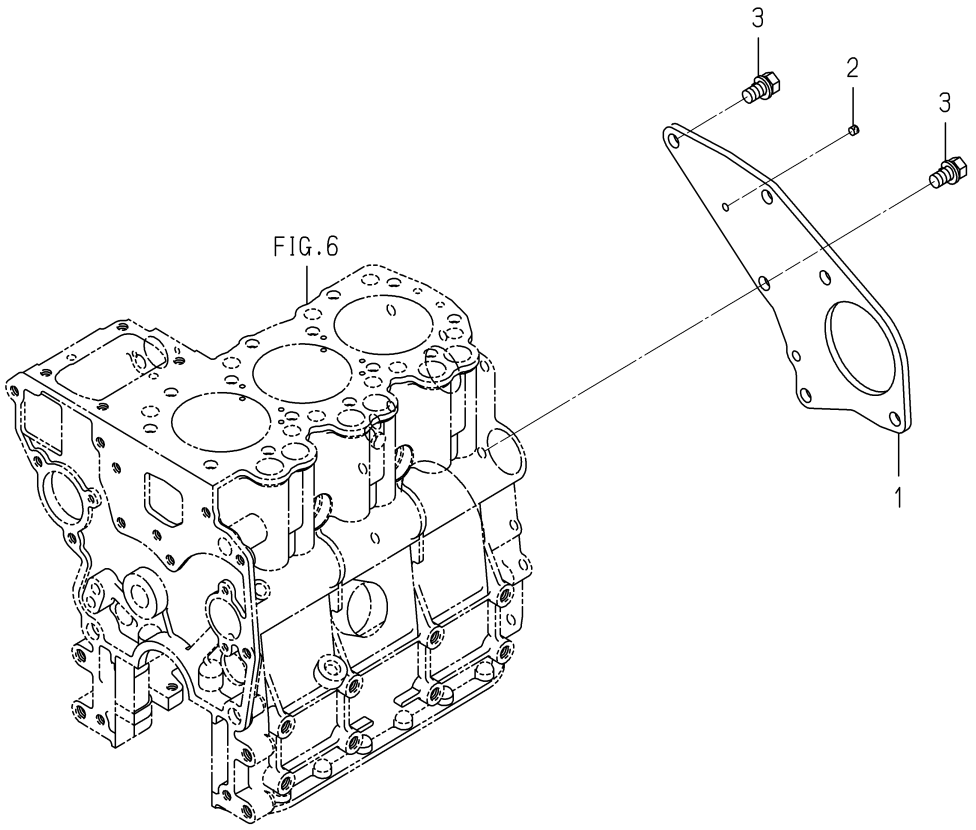


6004-220Y-0100

| KEY | PART CODE | DESCRIPTION | SPC | TYPE OF MODEL E3112 XG02 | | ITC | COL | GRP | REMARKS |
|---|---|---|---|---|---|---|---|---|---|
| 1 | 6211-341-081-10 | PLATE/REAR | * | 1 | | | | | |
| 2 | 6211-342-001-30 | POINTER | * | 1 | | | | | |
| 3 | 6901-911-020-00 | BOLT,SEMS/M10X20,7T | * | 2 | | | | | |

# FIG. 10 TIMING GEAR CASE

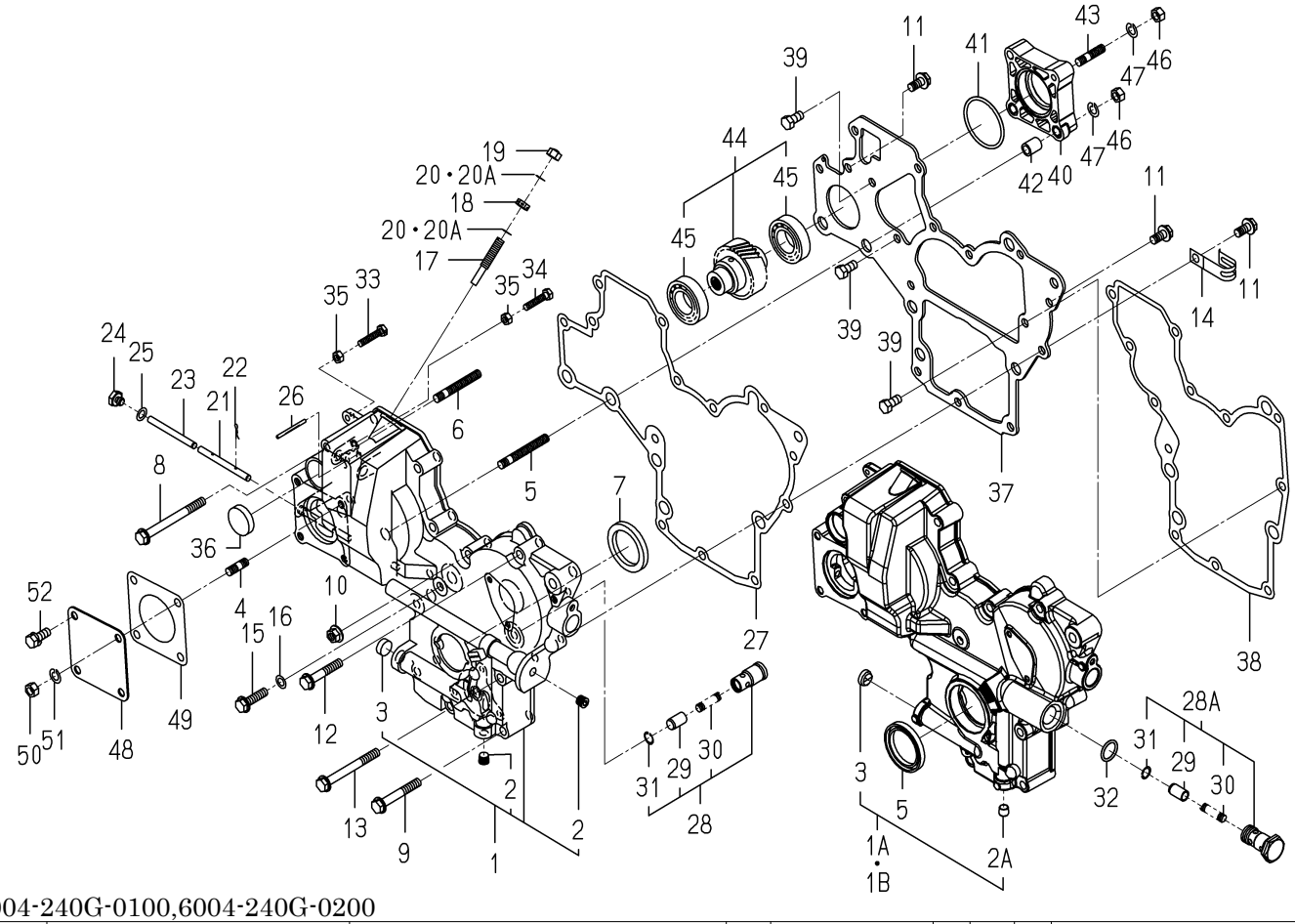


6004-240G-0100,6004-240G-0200

| KEY | PART CODE | DESCRIPTION | SPC | TYPE OF MODEL E3112 | TYPE OF MODEL XG02 | ITC | COL | GRP | REMARKS |
|---|---|---|---|---|---|---|---|---|---|
| 1 | 6211-310-025-70 | GEARCASE ASSY | * | 1 -498586 | | 1 | | | |
| 1A | 6211-310-120-00 | GEARCASE ASSY | * | 1 -510886 | | | | | |
| 1B | 6211-310-120-10 | GEARCASE ASSY | * | 1 510887- | | 1 | | | |
| 2 | 6209-605-007-10 | PLUG/PT1/8 | * | 2 -498586 | | | | | |
| 2A | 6209-605-007-10 | PLUG/PT1/8 | * | 1 498587- | | | | | |
| 3 | 6209-610-007-00 | CUP/SEALING/16 | * | 1 | | | | | |
| 4 | 6904-110-822-00 | STUD | * | 1 | | | | | |
| 5 | 6904-110-855-00 | STUD | * | 2 | | | | | |
| 6 | 6904-110-850-00 | STUD | * | 1 | | | | | |
| 7 | 6209-625-002-00 | SEAL,OIL | * | 1 | | | | | |
| 8 | V231-360-808-50 | FLANGEBOLT/M8X85 | * | 1 | | | | | |
| 9 | V231-360-805-50 | FLANGEBOLT/M8X55 | * | 2 | | | | | |
| 10 | 3817-401-001-00 | NUT/M08 | * | 1 | | | | | |
| 11 | V231-360-801-60 | FLANGEBOLT/M8X16 | * | 3 | | | | | |
| 12 | V231-360-804-50 | FLANGEBOLT/M8X45 | * | 5 | | | | | |
| 13 | V231-360-807-50 | FLANGEBOLT/M8X75 | * | 1 | | | | | |
| 14 | 1425-621-004-00 | HOLDER/JE/9-9 | * | 1 | | | | | |
| 15 | V231-360-803-00 | FLANGEBOLT/M8X30 | * | 1 | | | | | |
| 16 | 6209-500-003-00 | WASHER/08X14X01 | * | 1 | | | | | |
| 17 | 6215-546-003-30 | STOPPER/FULLLOAD | * | 1 | | | | | |
| 18 | V305-260-008-00 | NUT/M8 | * | 1 | | | | | |
| 19 | 6209-490-006-00 | NUT/CAP | * | 1 | | | | | |
| 20 | 6209-920-002-00 | PACKING | * | 2 -502093 | | | | | |
| 20A | 6215-619-028-00 | WASHER/PLATE/COPPER | * | 2 502094- | | | | | |
| 21 | 6215-542-004-20 | PIN/ARM | * | 1 | | | | | |
| 22 | P117-303-003-00 | PIN/SNAP | * | 2 | | | | | |
| 23 | 6215-542-005-20 | PIN | * | 1 | | | | | |
| 24 | 6209-600-004-00 | PLUG/SCREW | * | 1 | | | | | |
| 25 | 6209-500-003-00 | WASHER/08X14X01 | * | 1 | | | | | |
| 26 | 6209-740-001-00 | PIN,GROOVE | * | 1 | | | | | |

# FIG. 10 TIMING GEAR CASE

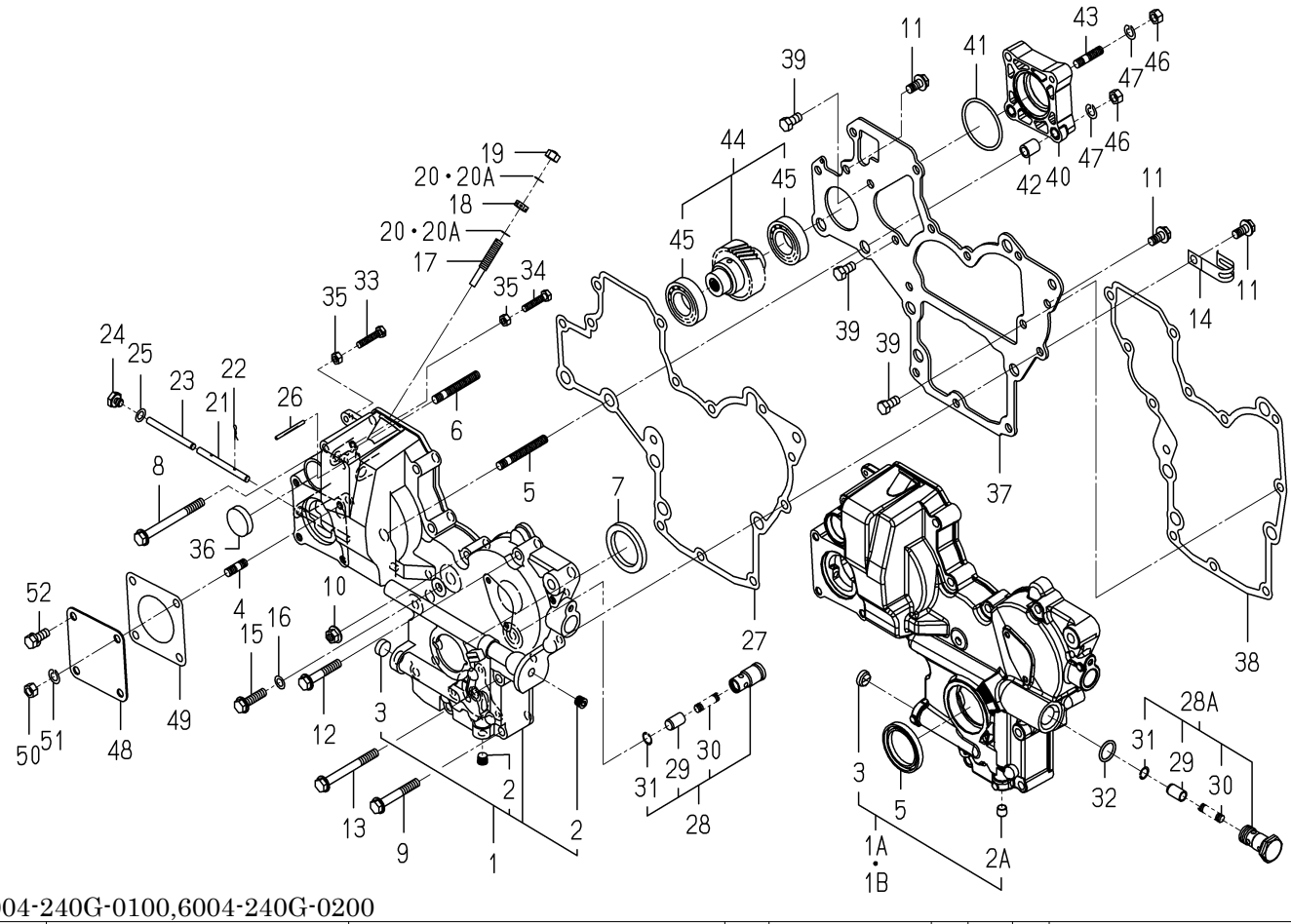


6004-240G-0100,6004-240G-0200

| KEY | PART CODE | DESCRIPTION | SPC | TYPE OF MODEL | | ITC | COL | GRP | REMARKS |
|---|---|---|---|---|---|---|---|---|---|
| | | | | E3112 XG02 | | | | | |
| 27 | 6211-312-003-20 | GASKET/GEARCASE | * | 1 | | | | | |
| 28 | 6213-160-002-20 | VALVE/RELIEF ASSY | * | 1 -498586 | | | | | |
| 28A | 6213-160-001-50 | VALVE/RELIEF ASSY | * | 1 498587- | | | | | |
| 29 | 6213-161-001-20 | PISTON/VALVE/RELIEF | * | 1 | | | | | |
| 30 | 6213-164-001-00 | SPRING/RELIEF VALVE | * | 1 | | | | | |
| 31 | V705-140-012-00 | RING,SNAP/12 C | * | 1 | | | | | |
| 32 | V720-102-401-80 | O-RING/1A,P18 | * | 1 498587- | | | | | |
| 33 | 6209-050-001-00 | BOLT/M6 | * | 1 | | | | | |
| 34 | 6209-050-002-00 | BOLT/M6 | * | 1 | | | | | |
| 35 | V301-260-006-00 | NUT/M6 | * | 2 | | | | | |
| 36 | 3625-540-004-00 | CAP,BLANK/30 | * | 1 | | | | | |
| 37 | 6211-311-007-40 | PLATE/FRONT | * | 1 | | | | | |
| 38 | 6211-312-004-20 | GASKET/PLATE | * | 1 | | | | | |
| 39 | 6902-050-816-00 | BOLT | * | 3 | | | | | |
| 40 | 6211-319-032-00 | SPACER/HYDRAULIC | * | 1 | | | | | |
| 41 | V723-102-005-00 | O-RING/1A,S50 | * | 1 | | | | | |
| 42 | 6209-749-001-30 | PIN/TUBE | * | 2 | | | | | |
| 43 | 6904-110-822-00 | STUD | * | 1 | | | | | |
| 44 | 6212-530-022-00 | SHAFT/HYDRAULIC ASSY | * | 1 | | | | | |
| 45 | V600-110-600-50 | BEARING,RB/6005 | * | 2 | | | | | |
| 46 | V304-260-008-00 | NUT/M8 | * | 4 | | | | | |
| 47 | V401-160-008-00 | WASHER,SP/M8 | * | 4 | | | | | |
| 48 | 6211-321-022-00 | COVER/HYDRAULIC | * | 1 | | | | | |
| 49 | 6211-322-002-00 | GASKET/COVER | * | 1 | | | | | |
| 50 | V304-260-008-00 | NUT/M8 | * | 1 | | | | | |
| 51 | V401-160-008-00 | WASHER,SP/M8 | * | 1 | | | | | |
| 52 | V211-560-802-00 | BOLT,S/M8X20/7T | * | 3 | | | | | |
| | | | | | | | | | |
| | | | | | | | | | |
| | | | | | | | | | |

# FIG. 11 HANGER

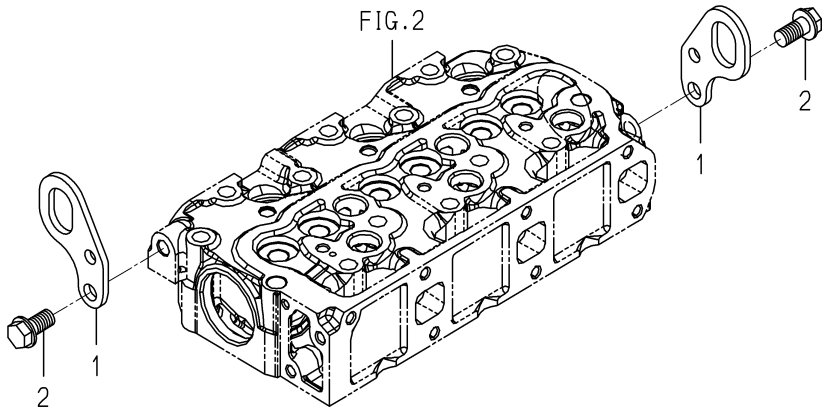


6003-290 -0100

| KEY | PART CODE | DESCRIPTION | SPC | TYPE OF MODEL E3112 XG02 | | ITC | COL | GRP | REMARKS |
|---|---|---|---|---|---|---|---|---|---|
| 1 | 6211-777-007-30 | HANGER | * | 2 | | | | | |
| 2 | V233-361-002-00 | FLANGEBOLT/M10X20 | * | 2 | | | | | |
| | | | | | | | | | |
| | | | | | | | | | |
| | | | |

# FIG. 12 VALVE

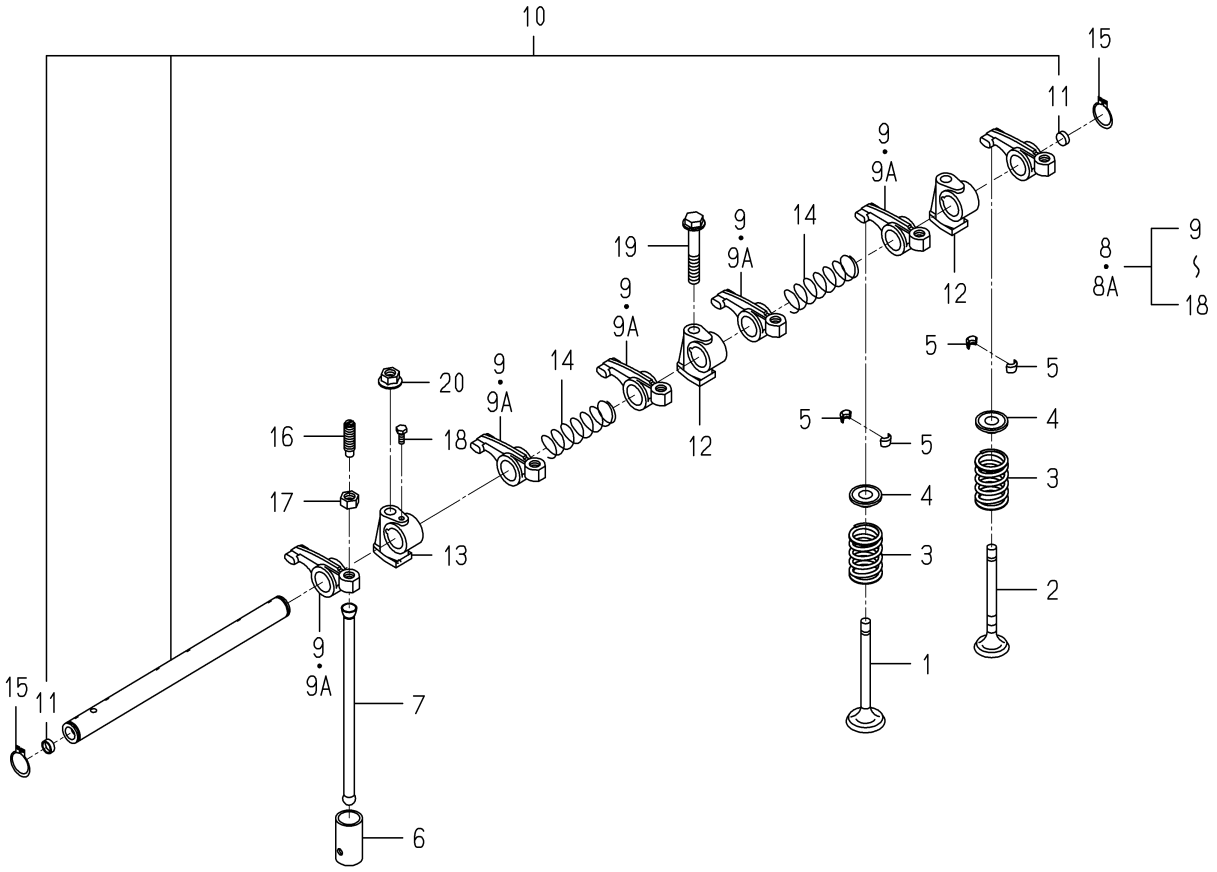


6004-301 -0100

| KEY | PART CODE | DESCRIPTION | SPC | TYPE OF MODEL E3112 XG02 | | ITC | COL | GRP | REMARKS |
|---|---|---|---|---|---|---|---|---|---|
| 1 | 6212-551-028-00 | VALVE/INTAKE | * | 3 | | | | | |
| 2 | 6212-552-014-00 | VALVE/EXHAUST | * | 3 | | | | | |
| 3 | 6212-561-001-10 | SPRING/VALVE | * | 6 | | | | | |
| 4 | 6212-563-005-00 | SEAT/VALVESPRING | * | 6 | | | | | |
| 5 | 6212-565-001-00 | CUTTER,VALVE | * | 12 | | | | | |
| 6 | 6212-571-006-00 | TAPPET | * | 6 | | | | | |
| 7 | 6212-575-002-00 | ROD,PUSH | * | 6 | | | | | |
| 8 | 6212-600-002-30 | ROCKERSHAFT ASSY | * | 1 -544395 | | | | | |
| 8A | 6212-600-002-40 | ROCKERSHAFT ASSY | * | 1 544396- | | 1 | | | |
| 9 | 6212-611-004-10 | ROCKERARM | * | 6 -533439 | | | | | |
| 9A | 6212-611-004-20 | ROCKERARM | * | 6 533440- | | 1 | | | |
| 10 | 6212-620-001-20 | SHAFT/ROCKERARM ASSY | * | 1 | | | | | |
| 11 | 6212-626-002-10 | PLUG | * | 2 | | | | | |
| 12 | 6212-628-004-00 | BRACKET ROCKER SHAFT | * | 2 | | | | | |
| 13 | 6212-628-005-00 | BRACKET,ROCKER SHAFT | * | 1 | | | | | |
| 14 | 6209-940-004-00 | SPRING | * | 2 | | | | | |
| 15 | V704-140-016-00 | RING,SNAP/16 C | * | 2 | | | | | |
| 16 | 6212-616-002-00 | SCREW ADJUST | * | 6 | | | | | |
| 17 | 6209-409-003-00 | NUT | * | 6 | | | | | |
| 18 | 6209-000-002-00 | BOLT | * | 1 | | | | | |
| 19 | V231-360-805-00 | FLANGEBOLT/M8X50 | * | 1 | | | | | |
| 20 | 3817-401-001-00 | NUT/M08 | * | 2 | | | | | |
| | | | | | | | | | |
| | | | | | | | | | |
| | | | | | | | | | |
| | | | | | | | | | |
| | | | | | | | | | |
| | | | | | | | | | |
| | | | | | | | | | |
| | | | | | | | | | |

# FIG. 13 CAM SHAFT

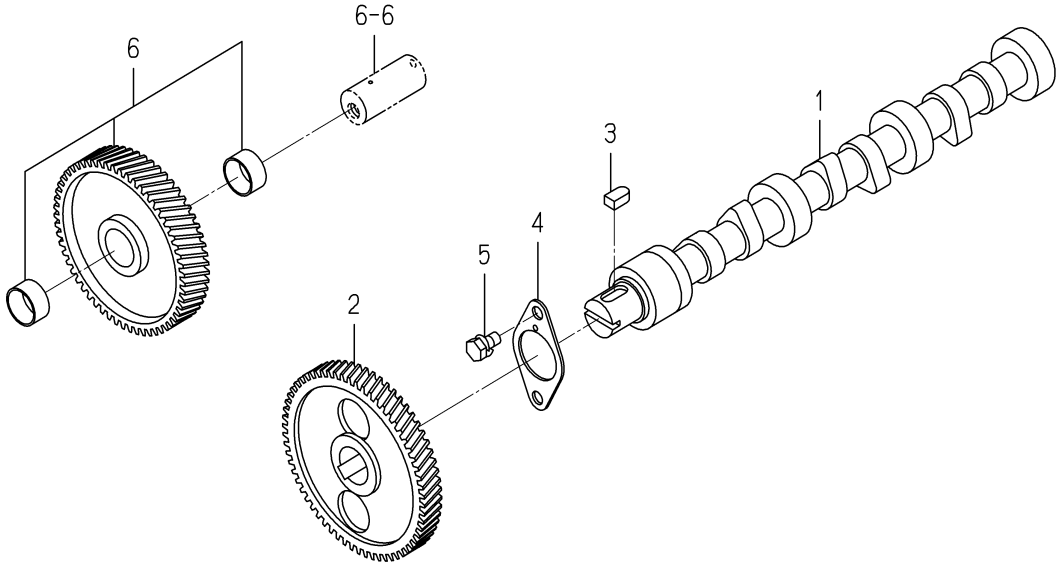


6003-310 -0100

| KEY | PART CODE | DESCRIPTION | SPC | TYPE OF MODEL E3112 XG02 | | ITC | COL | GRP | REMARKS |
|---|---|---|---|---|---|---|---|---|---|
| 1 | 6212-511-002-00 | SHAFT,CAM | * | 1 | | | | | |
| 2 | 6212-522-010-00 | GEAR/CAMSHAFT | * | 1 | | | | | |
| 3 | 6209-730-005-00 | KEY/07X05X09 | * | 1 | | | | | |
| 4 | 6212-535-014-00 | PLATE/THRUST | * | 1 | | | | | |
| 5 | V210-560-601-20 | BOLT,S/M6X12/7T | * | 2 | | | | | |
| 6 | 6212-523-023-00 | GEAR/IDLE ASSY | * | 1 | | | | | |

# FIG. 14 PISTON

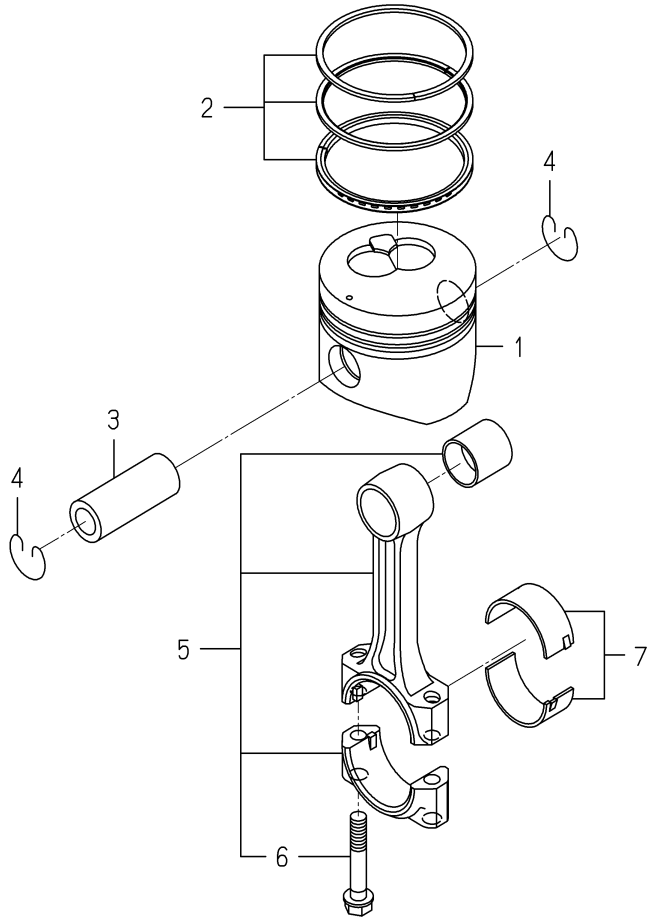


6004-340I-0100

| KEY | PART CODE | DESCRIPTION | SPC | TYPE OF MODEL E3112 XG02 | | ITC | COL | GRP | REMARKS |
|---|---|---|---|---|---|---|---|---|---|
| 1 | 6212-111-094-20 | PISTON | * | 3 | | | | | |
| 2 | 6212-121-014-20 | RING/PISTON SET | * | 3 | | | | | |
| 3 | 6212-211-001-10 | PIN,PISTON | * | 3 | | | | | |
| 4 | 6209-587-001-00 | RING,SNAP | * | 6 | | | | | |
| 5 | 6212-230-004-10 | CONNECTINGROD ASSY | * | 3 | | | | | |
| 6 | 6212-235-005-10 | BOLT/CONNECTINGROD | * | 6 | | | | | |
| 7 | 6212-271-016-00 | BEARING/CONNECTING R | * | 3 | | | | | |

# FIG. 15 PISTON/OVER SIZE (OPTION)

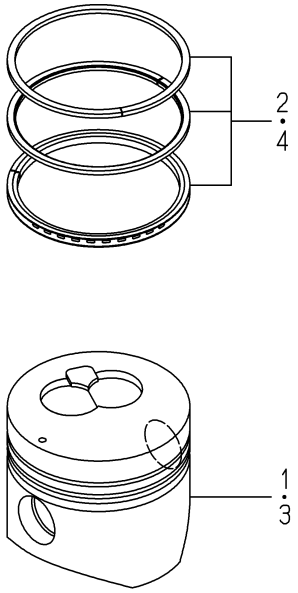


6004-349I-0100

| KEY | PART CODE | DESCRIPTION | SPC | TYPE OF MODEL | | ITC | COL | GRP | REMARKS |
|---|---|---|---|---|---|---|---|---|---|
| | | | | E3112 XG02 | | | | | |
| 1 | 6212-114-094-20 | PISTON(OV/050) | T | 3 | | | | | |
| 2 | 6212-124-014-10 | RINGPISTON/OV050 SET | T | 3 | | | | | |
| 3 | 6212-116-094-20 | PISTON(OV/100) | T | 3 | | | | | |
| 4 | 6212-126-014-10 | RINGPISTON/OV100 SET | T | 3 | | | | | |

# FIG. 16 CRANK SHAFT

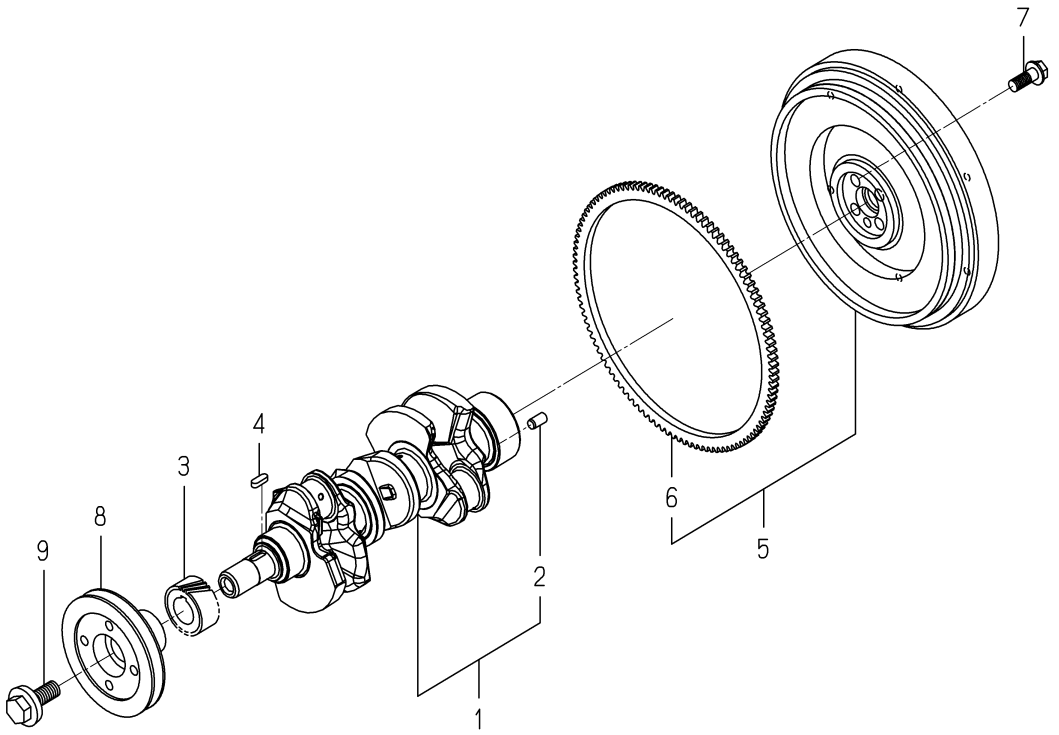


6004-351L-0100

| KEY | PART CODE | DESCRIPTION | SPC | TYPE OF MODEL E3112 XG02 | | ITC | COL | GRP | REMARKS |
|---|---|---|---|---|---|---|---|---|---|
| 1 | 6212-310-057-00 | CRANKSHAFT ASSY | * | 1 | | | | | |
| 2 | V523-101-001-80 | PIN,ST,B/10X18 | * | 1 | | | | | |
| 3 | 6212-521-008-10 | GEAR/CRANK | * | 1 | | | | | |
| 4 | 6209-730-002-00 | KEY/07X05X20 | * | 1 | | | | | |
| 5 | 6212-330-083-10 | FLYWHEEL ASSY | * | 1 | | | | | |
| 6 | 6212-333-009-00 | RINGGEAR | * | 1 | | | | | |
| 7 | 6209-046-015-00 | BOLT/FLANGE | * | 4 | | | | | |
| 8 | 6212-371-081-00 | PULLEY/CRANK | * | 1 | | | | | |
| 9 | 6209-000-043-00 | BOLT/CRANK | * | 1 | | | | | |

# FIG. 17 OIL PUMP

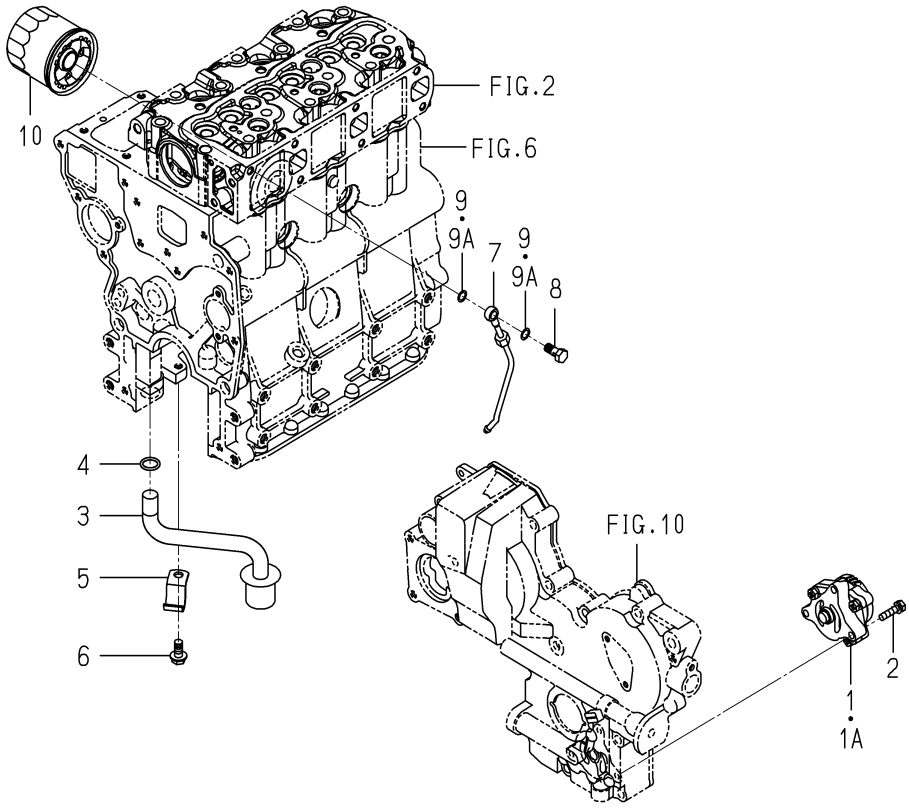


6004-401A-0100

| KEY | PART CODE | DESCRIPTION | SPC | TYPE OF MODEL E3112 XG02 | | ITC | COL | GRP | REMARKS |
|---|---|---|---|---|---|---|---|---|---|
| 1 | 6213-100-003-50 | OILPUMP ASSY | * | 1 -517762 | | | | | |
| 1A | 6213-100-003-60 | OILPUMP ASSY | * | 1 517763- | | 1 | | | |
| 2 | V210-560-602-50 | BOLT,S/M6X25/7T | * | 3 | | | | | |
| 3 | 6213-140-032-10 | STRAINER | * | 1 | | | | | |
| 4 | V720-102-401-50 | O-RING/1A,P15 | * | 1 | | | | | |
| 5 | 6213-149-001-00 | CLAMP,STRAINER | * | 1 | | | | | |
| 6 | V231-360-801-60 | FLANGEBOLT/M8X16 | * | 1 | | | | | |
| 7 | 6213-311-006-10 | PIPE/OIL ASSY | * | 1 | | | | | |
| 8 | 6909-906-105-10 | BOLT,JOINT | * | 1 | | | | | |
| 9 | 6209-920-002-00 | PACKING | * | 2 -502033 | | | | | |
| 9A | 6215-619-028-00 | WASHER/PLATE/COPPER | * | 2 502034- | | | | | |
| 10 | 6213-240-002-20 | CARTRIDGE/OILFILTER | * | 1 | | | | | |

# FIG. 18 WATER PUMP

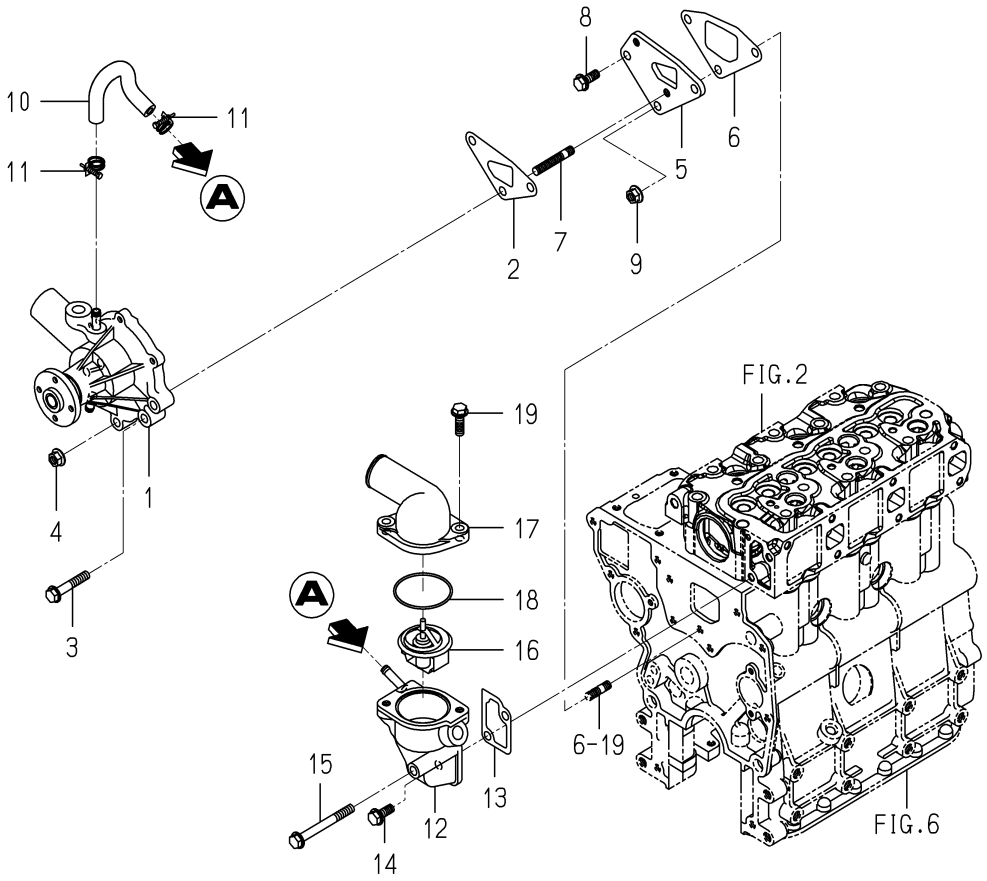


6004-420D-0100

| KEY | PART CODE | DESCRIPTION | SPC | TYPE OF MODEL E3112 XG02 | | ITC | COL | GRP | REMARKS |
|---|---|---|---|---|---|---|---|---|---|
| 1 | 6213-610-005-50 | WATERPUMP ASSY | * | 1 | | | | | |
| 2 | 6213-614-018-00 | GASKET/WATERPUMP | * | 1 | | | | | |
| 3 | V231-360-804-50 | FLANGEBOLT/M8X45 | * | 1 | | | | | |
| 4 | 3817-401-001-00 | NUT/M08 | * | 2 | | | | | |
| 5 | 6213-619-001-00 | SPACER,PUMP.WATER | * | 1 | | | | | |
| 6 | 6213-614-019-00 | GASKET/SPACER | * | 1 | | | | | |
| 7 | 6904-110-840-00 | STUD/M8X40 | * | 2 | | | | | |
| 8 | V231-360-802-00 | FLANGEBOLT/M8X20 | * | 1 | | | | | |
| 9 | 3817-401-001-00 | NUT/M08 | * | 1 | | | | | |
| 10 | 6213-729-016-00 | HOSE/RUBBER | * | 1 | | | | | |
| 11 | J061-210-015-00 | CLAMP/WIRE/10-15 | * | 2 | | | | | |
| 12 | 6213-716-001-60 | HOUSING/THERMOSTAT | * | 1 | | | | | |
| 13 | 6213-743-002-10 | GASKET/HOUSING | * | 1 | | | | | |
| 14 | V231-360-802-00 | FLANGEBOLT/M8X20 | * | 1 | | | | | |
| 15 | V231-360-807-50 | FLANGEBOLT/M8X75 | * | 1 | | | | | |
| 16 | 6513-770-022-10 | THERMOSTAT | * | 1 | | | | | |
| 17 | 6213-711-004-00 | PIPE/WATEROUTLET | * | 1 | | | | | |
| 18 | V723-102-005-50 | O-RING/1A,S55 | * | 1 | | | | | |
| 19 | V231-360-802-50 | FLANGEBOLT/M8X25 | * | 2 | | | | | |

# FIG. 19 COOLING FAN

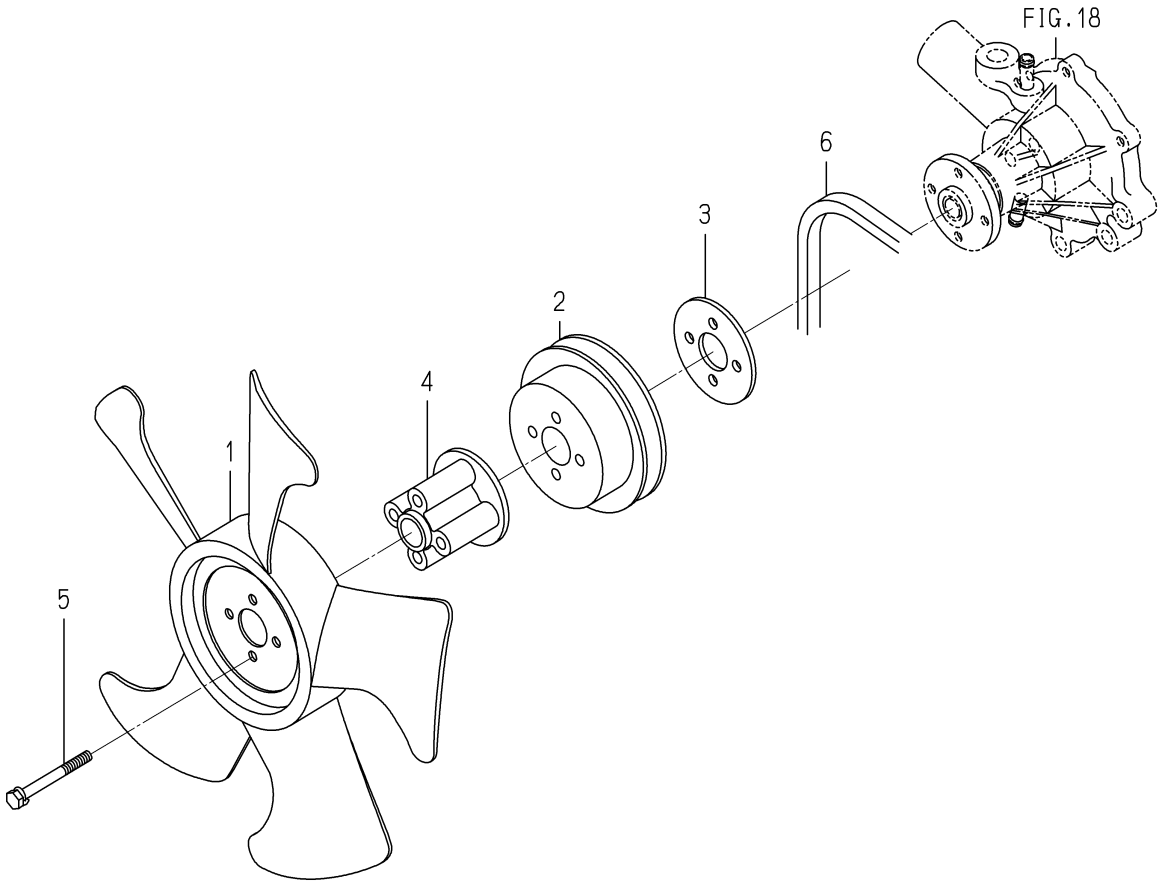


6004-480U-0100

| KEY | PART CODE | DESCRIPTION | SPC | TYPE OF MODEL E3112 XG02 | | ITC | COL | GRP | REMARKS |
|---|---|---|---|---|---|---|---|---|---|
| 1 | 6213-660-023-00 | FAN/COOLING | * | 1 | | | | | |
| 2 | 6213-641-022-20 | PULLEY/WATERPUMP | * | 1 | | | | | |
| 3 | 6213-669-022-00 | SPACER/FAN | * | 1 | | | | | |
| 4 | 6213-669-008-00 | SPACER/FAN/48 | * | 1 | | | | | |
| 5 | 6209-030-092-00 | BOLT/WS | * | 4 | | | | | |
| 6 | 6213-671-054-00 | BELT/VNR5A36.5 | * | 1 | | | | | |

# FIG. 20 INJECTION NOZZLE

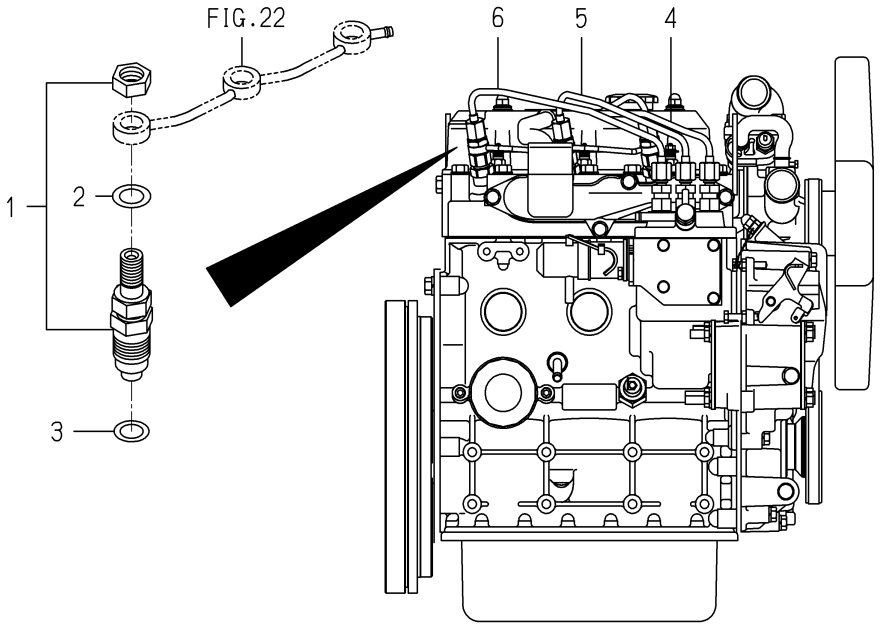


6004-501C-0100

| KEY | PART CODE | DESCRIPTION | SPC | TYPE OF MODEL E3112 XG02 | | ITC | COL | GRP | REMARKS |
|---|---|---|---|---|---|---|---|---|---|
| 1 | 6215-300-036-10 | INJECTIONNOZZLE ASSY | * | 3 | | | | | FIG 029 |
| 2 | 6215-359-001-00 | WASHER | * | 3 | | | | | |
| 3 | 6215-315-002-00 | GASKET,NOZZLE | * | 3 | | | | | |
| 4 | 6215-411-126-10 | PIPE/INJECTION ASSY | * | 1 | | | | | |
| 5 | 6215-411-127-00 | PIPE/INJECTION ASSY | * | 1 | | | | | |
| 6 | 6215-411-128-00 | PIPE/INJECTION ASSY | * | 1 | | | | | |

# FIG. 21 INJECTION PUMP

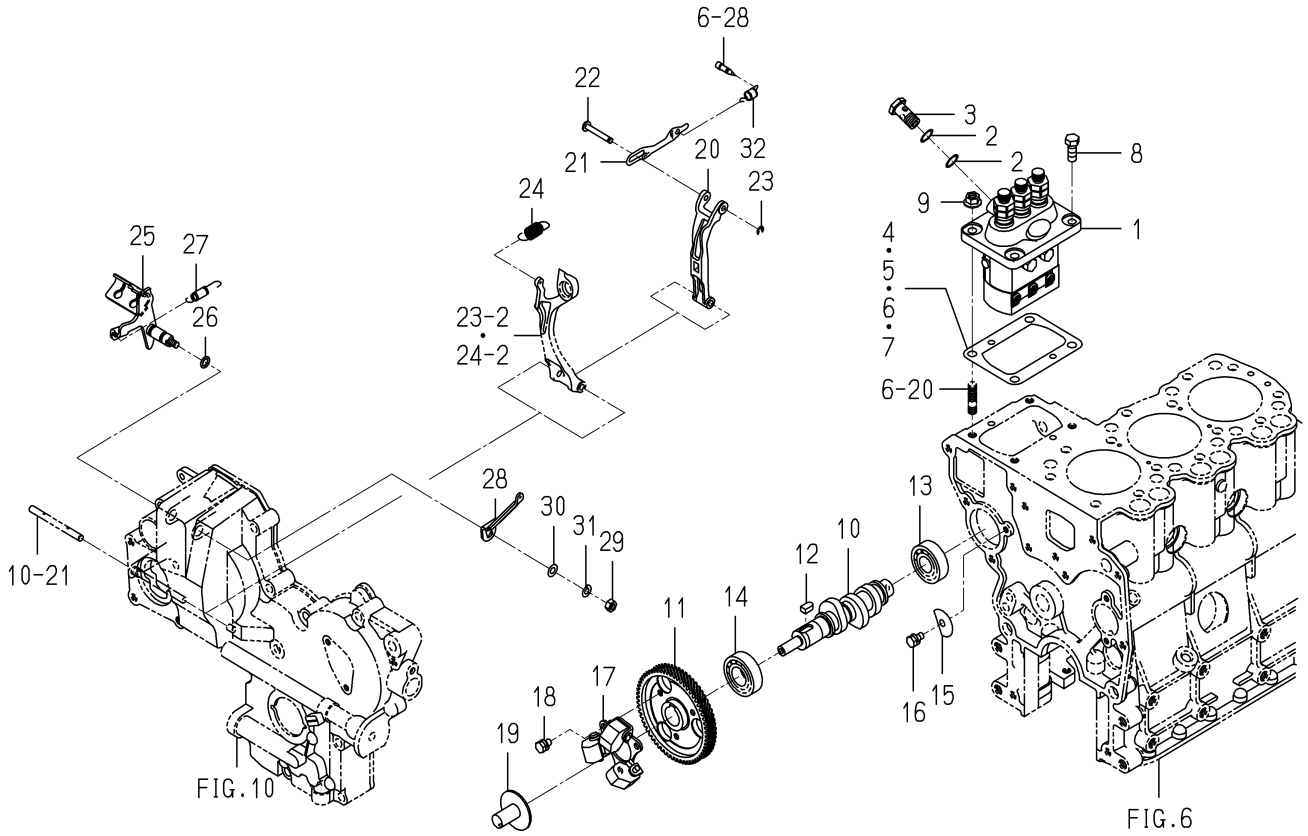


6004-511W-0100

| KEY | PART CODE | DESCRIPTION | SPC | TYPE OF MODEL E3112 XG02 | | ITC | COL | GRP | REMARKS |
|---|---|---|---|---|---|---|---|---|---|
| 1 | 6215-600-103-30 | INJECTIONPUMP ASSY | * | 1 | | | | | FIG 030 |
| 2 | 6215-619-010-00 | WASHER/AIR BLEEDER | * | 2 | | | | | |
| 3 | 6215-619-009-00 | SCREW/HOLLOW | * | 1 | | | | | |
| 4 | 6219-752-045-00 | SHIM/INJECTIONPUMP | * | 1 | | | | | |
| 5 | 6219-752-044-00 | SHIM/INJECTIONPUMP | * | 1 | | | | | |
| 6 | 6219-752-046-00 | SHIM/INJECTIONPUMP | * | 1 | | | | | |
| 7 | 6219-752-047-00 | SHIM/INJECTIONPUMP | * | 1 | | | | | |
| 8 | V201-360-802-00 | BOLT/M8X20/7T | * | 2 | | | | | |
| 9 | 3817-401-001-00 | NUT/M08 | * | 2 | | | | | |
| 10 | 6215-621-016-30 | CAMSHAFT/INJECTION P | * | 1 | | | | | |
| 11 | 6212-524-002-40 | GEAR/INJECTIONPUMP | * | 1 | | | | | |
| 12 | 6209-730-005-00 | KEY/07X05X09 | * | 1 | | | | | |
| 13 | V600-110-620-30 | BEARING,RB/6203 | * | 1 | | | | | |
| 14 | 1729-202-001-00 | BEARING/BALL | * | 1 | | | | | |
| 15 | 6212-535-010-10 | PLATE/THRUST/INJECTI | * | 1 | | | | | |
| 16 | V210-560-601-20 | BOLT,S/M6X12/7T | * | 1 | | | | | |
| 17 | 6215-520-001-00 | FLYWEIGHT | * | 1 | | | | | |
| 18 | 6209-030-043-00 | BOLT/M6X10 | * | 3 | | | | | |
| 19 | 6215-526-004-00 | THRUSTPIECE | * | 1 | | | | | |
| 20 | 6215-541-001-10 | ARM/FLOATING COMP | * | 1 | | | | | |
| 21 | 6215-543-002-10 | RINK/CONTROL | * | 1 | | | | | |
| 22 | 6215-542-006-00 | PIN,CONTROL | * | 1 | | | | | |
| 23 | V710-140-004-00 | RING,SNAP/4 E | * | 1 | | | | | |
| 24 | 6215-531-029-00 | SPRING/GOVERNOR | * | 1 | | | | | |
| 25 | 6215-541-024-50 | LEVER/CONTROL COMP | * | 1 | | | | | |
| 26 | V720-101-900-80 | O-RING/1A,P8 | * | 1 | | | | | |
| 27 | 6209-580-002-10 | SPRING,RETURN | * | 1 | | | | | |
| 28 | 6215-549-007-10 | ARM/CONTROL | * | 1 | | | | | |
| 29 | V301-260-006-00 | NUT/M6 | * | 1 | | | | | |
| 30 | V411-260-006-00 | WASHER,PL/M6 | * | 1 | | | | | |

# FIG. 21 INJECTION PUMP

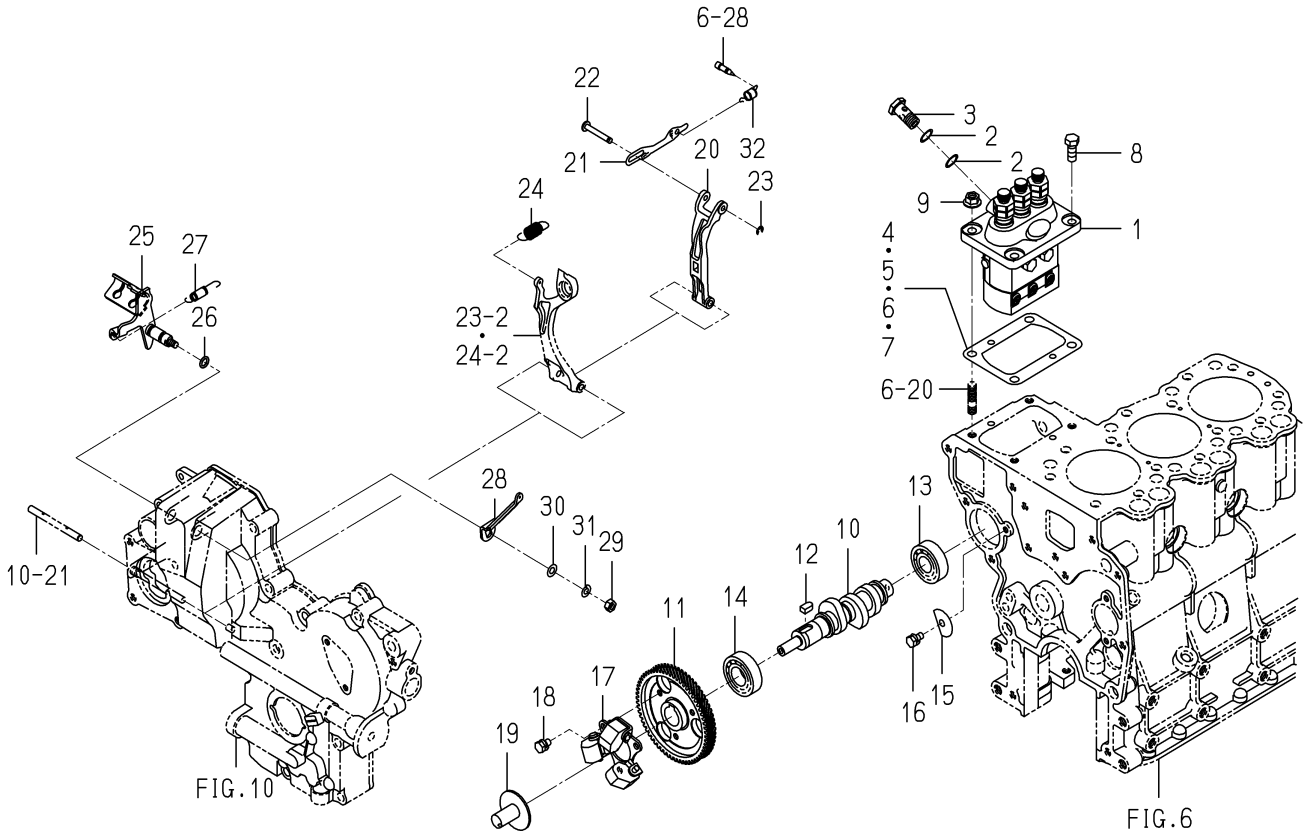


6004-511W-0100

| KEY | PART CODE | DESCRIPTION | SPC | TYPE OF MODEL E3112 XG02 | | ITC | COL | GRP | REMARKS |
|---|---|---|---|---|---|---|---|---|---|
| 31 | V401-160-006-00 | WASHER,SP/M6 | * | 1 | | | | | |
| 32 | 6215-549-012-00 | SPRING,STARTING | * | 1 | | | | | |

# FIG. 22 FUEL PIPE

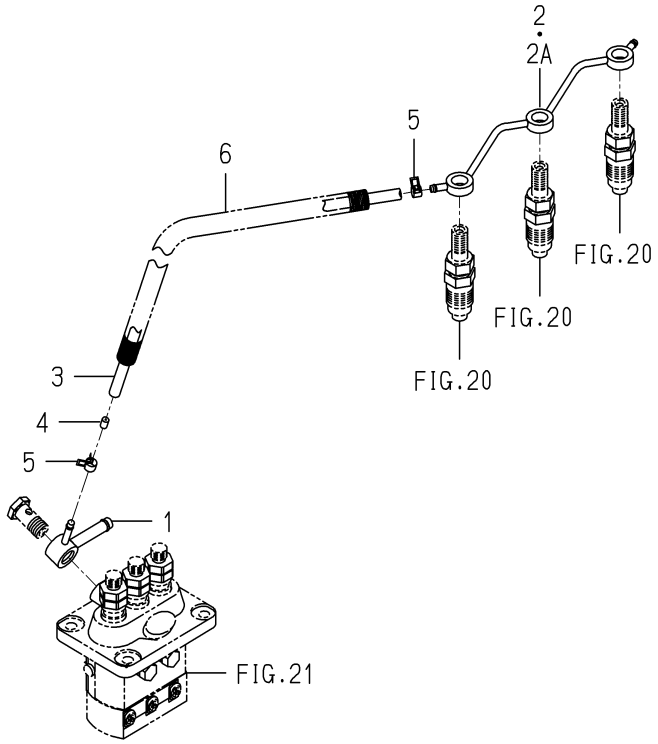


6004-550O-0100

| KEY | PART CODE | DESCRIPTION | SPC | TYPE OF MODEL E3112 XG02 | | ITC | COL | GRP | REMARKS |
|---|---|---|---|---|---|---|---|---|---|
| 1 | 6215-412-004-00 | CONNECTOR/FUEL | * | 1 | | | | | |
| 2 | 6215-411-198-00 | PIPE/FUEL | * | 1 -554034 | | | | | |
| 2A | 6215-411-198-10 | PIPE/FUEL | * | 1 554035- | | 1 | | | |
| 3 | 6209-360-011-00 | HOSE/RUBBER | * | 1 | | | | | |
| 4 | 3640-586-004-00 | RESISTANCE/1.0 | * | 1 | | | | | |
| 5 | J062-076-082-00 | CLIP/HOSE/7.6-8.2 | * | 2 | | | | | |
| 6 | 6209-360-143-00 | CORRUGATEDTUBE | * | 1 | | | | | |

# FIG. 23 ADAPTER

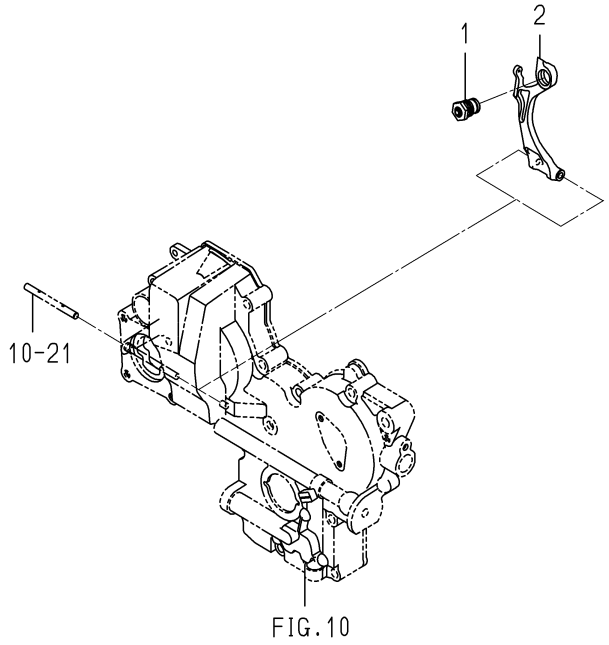


FIG.10

6005-560 -0100

| KEY | PART CODE | DESCRIPTION | SPC | TYPE OF MODEL E3112 XG02 | | ITC | COL | GRP | REMARKS |
|---|---|---|---|---|---|---|---|---|---|
| 1 | 6215-548-029-20 | ADAPTER/255X065 ASSY | * | 1 -545457 | | | | | |
| 2 | 6215-541-016-60 | ARM/TENSION | * | 1 -545457 | | | | | |

# FIG. 24 ADAPTER

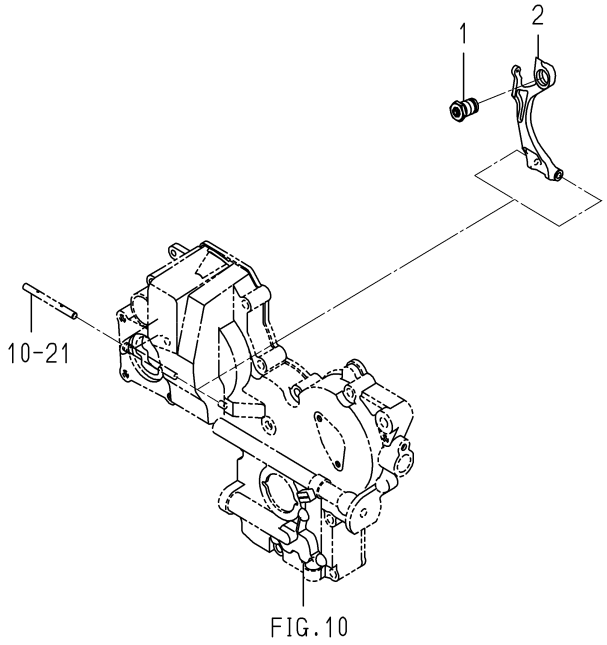


FIG.10

6004-561K-0100

| KEY | PART CODE | DESCRIPTION | SPC | TYPE OF MODEL E3112 XG02 | | ITC | COL | GRP | REMARKS |
|---|---|---|---|---|---|---|---|---|---|
| 1 | 6215-548-134-00 | ADAPTER/255X085 ASSY | * | 1 545458- | | | | | |
| 2 | 6215-541-016-70 | ARM/TENSION | * | 1 545458- | | | | | |
| | | | | | | | | | |
| | | | | | | | | | |
| | | | |

# FIG. 25 ELECTRIC (1)

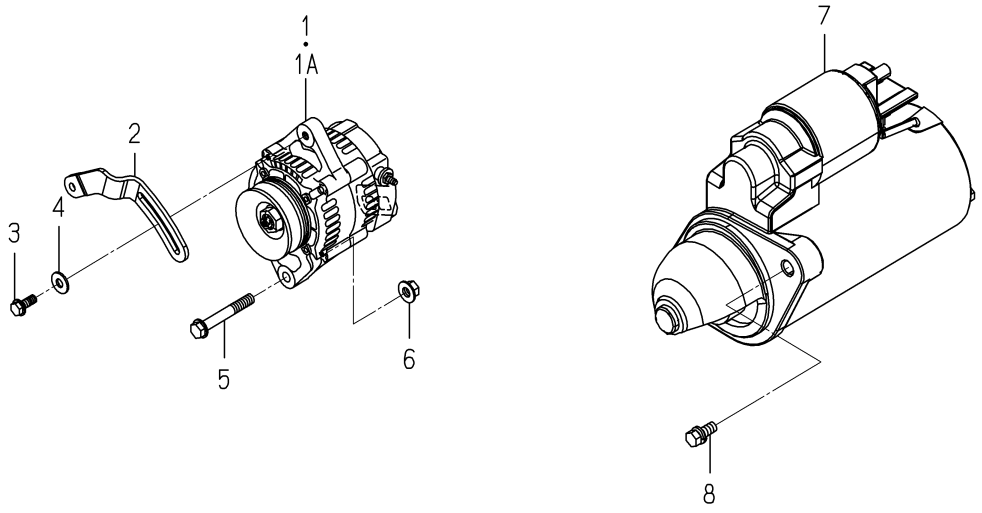


6004-801V-0100,6004-801V-0200

| KEY | PART CODE | DESCRIPTION | SPC | TYPE OF MODEL E3112 XG02 | | ITC | COL | GRP | REMARKS |
|---|---|---|---|---|---|---|---|---|---|
| 1 | 6281-200-015-10 | GENERATOR ASSY | * | 1 -538492 | | | | | FIG 031 |
| 1A | 6281-200-048-00 | GENERATOR ASSY | * | 1 538493- | | | | | FIG 032 |
| 2 | 6213-674-046-00 | PLATE/ADJUST | * | 1 | | | | | |
| 3 | V231-360-802-00 | FLANGEBOLT/M8X20 | * | 1 | | | | | |
| 4 | 1373-121-001-00 | WASHER/9X22X2 | * | 1 | | | | | |
| 5 | V233-361-007-00 | FLANGEBOLT/M10X70 | * | 1 | | | | | |
| 6 | 6209-440-007-00 | NUT/FLANGE/M10 | * | 1 | | | | | |
| 7 | 6281-100-023-00 | STARTER ASSY | * | 1 | | | | | |
| 8 | 6901-911-025-00 | BOLT,SEMS/M10X25,7T | * | 2 | | | | | |

# FIG. 26 ELECTRIC (2)

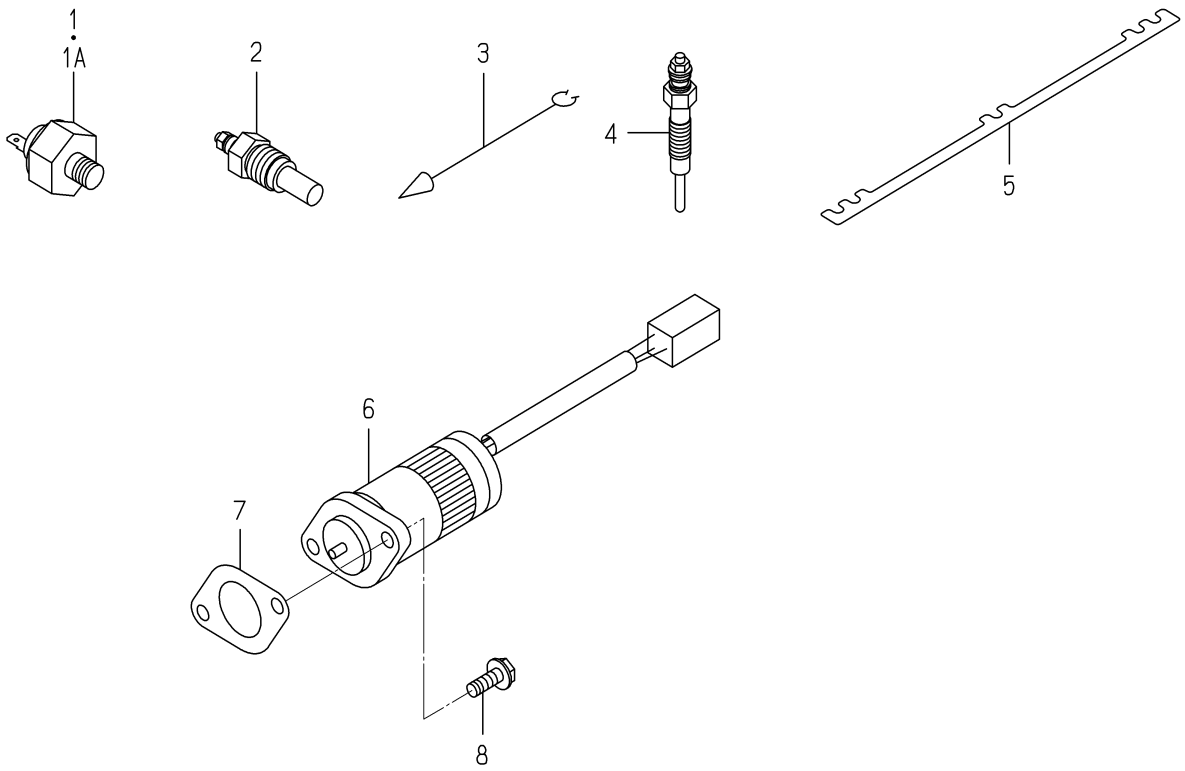


6004-821E-0100,6004-821E-0200

| KEY | PART CODE | DESCRIPTION | SPC | TYPE OF MODEL E3112 XG02 | | ITC | COL | GRP | REMARKS |
|---|---|---|---|---|---|---|---|---|---|
| 1 | 6281-971-006-00 | SWITCH/OILPRESSURE | * | 1 -537493 | | | | | |
| 1A | 6281-971-006-10 | SWITCH/OILPRESSURE | * | 1 537494- | | 1 | | | |
| 2 | 6282-450-011-00 | THERMOMETER | * | 1 | | | | | |
| 3 | 1600-624-004-10 | HARNESS/OILPRESSURE | * | 1 | | | | | |
| 4 | 6281-410-026-10 | GLOWPLUG | * | 3 | | | | | |
| 5 | 6219-732-017-00 | CONNECTOR/GLOWPLUG | * | 1 | | | | | |
| 6 | 6281-910-013-00 | SOLENOID | * | 1 | | | | | |
| 7 | 6211-312-032-00 | GASKET/COVER | * | 1 | | | | | |
| 8 | V230-360-601-60 | FLANGEBOLT/M6X16 | * | 2 | | | | | |

# FIG. 27 REPAIR PARTS(OPTION)

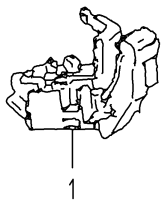


6005-998D-0100

| KEY | PART CODE | DESCRIPTION | SPC | TYPE OF MODEL E3112 XG02 | | ITC | COL | GRP | REMARKS |
|---|---|---|---|---|---|---|---|---|---|
| 1 | 6281-271-003-00 | REGULATOR ASSY | T | 1 -538492 | | | | | |

# FIG. 28 REPAIR PARTS(OPTION)

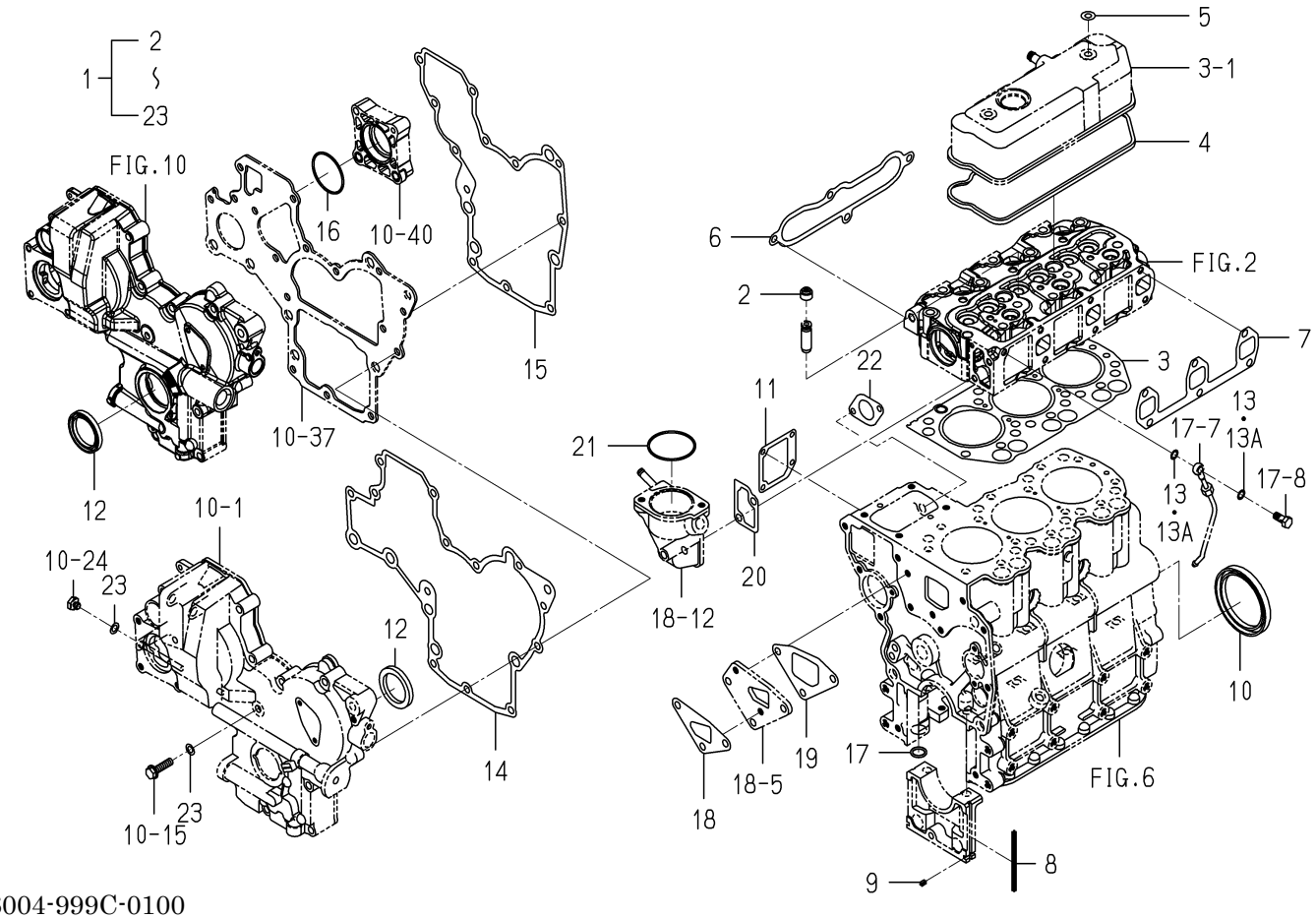


6004-999C-0100

| KEY | PART CODE | DESCRIPTION | SPC | TYPE OF MODEL E3112 XG02 | | ITC | COL | GRP | REMARKS |
|---|---|---|---|---|---|---|---|---|---|
| 1 | 6287-810-015-40 | REPAIR/ENGINE SET | T | 1 | | | | | |
| 2 | 6212-569-002-00 | SEAL,OIL | T | 6 | | | | | |
| 3 | 6211-141-029-20 | GASKET/CYLINDERHEAD | T | 1 | | | | | |
| 4 | 6211-173-003-00 | SEAL,CYL.HEAD COVER | T | 1 | | | | | |
| 5 | 6209-572-003-00 | GASKET | T | 2 | | | | | |
| 6 | 6214-115-001-20 | GASKET,INLET MANIFOL | T | 1 | | | | | |
| 7 | 6214-145-001-30 | GASKET,EXH.MANIFOLD | T | 1 | | | | | |
| 8 | 6211-258-001-00 | SEAL,BEARING CAP | T | 4 | | | | | |
| 9 | 6211-258-002-00 | SEAL,BEARING CAP/7 | T | 2 | | | | | |
| 10 | 6209-625-001-00 | SEAL,OIL | T | 1 | | | | | |
| 11 | 6211-292-009-00 | GASKET/COVER | T | 1 | | | | | |
| 12 | 6209-625-002-00 | SEAL,OIL | T | 1 | | | | | |
| 13 | 6209-920-002-00 | PACKING | T | 2 -502033 | | | | | |
| 13A | 6215-619-028-00 | WASHER/PLATE/COPPER | T | 2 502034- | | | | | |
| 14 | 6211-312-003-20 | GASKET/GEARCASE | T | 1 | | | | | |
| 15 | 6211-312-004-20 | GASKET/PLATE | T | 1 | | | | | |
| 16 | V723-102-005-00 | O-RING/1A,S50 | T | 1 | | | | | |
| 17 | V720-102-401-50 | O-RING/1A,P15 | T | 1 | | | | | |
| 18 | 6213-614-018-00 | GASKET/WATERPUMP | T | 1 | | | | | |
| 19 | 6213-614-019-00 | GASKET/SPACER | T | 1 | | | | | |
| 20 | 6213-743-002-10 | GASKET/HOUSING | T | 1 | | | | | |
| 21 | V723-102-005-50 | O-RING/1A,S55 | T | 1 | | | | | |
| 22 | 6211-312-032-00 | GASKET/COVER | T | 1 | | | | | |
| 23 | 6209-500-003-00 | WASHER/08X14X01 | T | 2 | | | | | |
| | | | | | | | | | |
| | | | | | | | | | |
| | | | | | | | | | |
| | | | | | | | | | |
| | | | | | | | | | |
| | | | | | | | | | |

# FIG. 29 COMPONENT PARTS
# FOR 6215-300-036-10 ON Fig.020

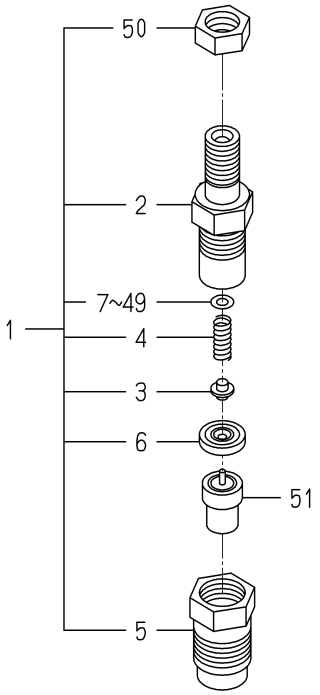


6215-300-036-1B

| KEY | PART CODE | DESCRIPTION | SPC | TYPE OF MODEL E3112 XG02 | | ITC | COL | GRP | REMARKS |
|---|---|---|---|---|---|---|---|---|---|
| 1 | 6215-330-024-10 | HOLDER/NOZZLE ASSY | * | 3 | | | | | |
| 2 | 6215-331-008-00 | BODY/NOZZLE HOLDER | * | 3 | | | | | |
| 3 | 6215-342-001-00 | PIN,NOZZLE HOLDER | * | 3 | | | | | |
| 4 | 6215-343-001-00 | SPRING/NOZZLEHOLDER | * | 3 | | | | | |
| 5 | 6215-332-013-00 | NUT/NOZZLERETAINING | * | 3 | | | | | |
| 6 | 6215-339-001-00 | PIECE,DISTANCE | * | 3 | | | | | |
| 7 | 6215-345-001-00 | WASHER/0.9 | * | 3 | | | | | |
| 8 | 6215-345-002-00 | WASHER/0.925 | * | 3 | | | | | |
| 9 | 6215-345-003-00 | WASHER/0.95 | * | 3 | | | | | |
| 10 | 6215-345-004-00 | WASHER/0.975 | * | 3 | | | | | |
| 11 | 6215-345-005-00 | WASHER/1.0 | * | 3 | | | | | |
| 12 | 6215-345-006-00 | WASHER/1.025 | * | 3 | | | | | |
| 13 | 6215-345-007-00 | WASHER/1.05 | * | 3 | | | | | |
| 14 | 6215-345-008-00 | WASHER/1.075 | * | 3 | | | | | |
| 15 | 6215-345-009-00 | WASHER/1.1 | * | 3 | | | | | |
| 16 | 6215-345-010-00 | WASHER/1.125 | * | 3 | | | | | |
| 17 | 6215-345-011-00 | WASHER/1.15 | * | 3 | | | | | |
| 18 | 6215-345-012-00 | WASHER/1.175 | * | 3 | | | | | |
| 19 | 6215-345-013-00 | WASHER/1.2 | * | 3 | | | | | |
| 20 | 6215-345-014-00 | WASHER/1.225 | * | 3 | | | | | |
| 21 | 6215-345-015-00 | WASHER/1.25 | * | 3 | | | | | |
| 22 | 6215-345-016-00 | WASHER/1.275 | * | 3 | | | | | |
| 23 | 6215-345-017-00 | WASHER/1.3 | * | 3 | | | | | |
| 24 | 6215-345-018-00 | WASHER/1.325 | * | 3 | | | | | |
| 25 | 6215-345-019-00 | WASHER/1.35 | * | 3 | | | | | |
| 26 | 6215-345-020-00 | WASHER/1.375 | * | 3 | | | | | |
| 27 | 6215-345-021-00 | WASHER/1.4 | * | 3 | | | | | |
| 28 | 6215-345-022-00 | WASHER/1.425 | * | 3 | | | | | |
| 29 | 6215-345-023-00 | WASHER/1.45 | * | 3 | | | | | |
| 30 | 6215-345-024-00 | WASHER/1.475 | * | 3 | | | | | |

# FIG. 29 COMPONENT PARTS
# FOR 6215-300-036-10 ON Fig.020

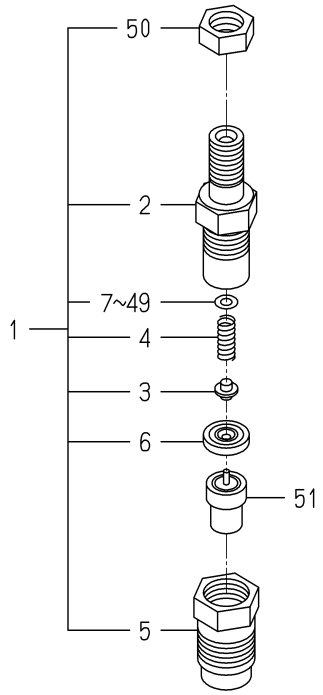


6215-300-036-1B

| KEY | PART CODE | DESCRIPTION | SPC | TYPE OF MODEL E3112 XG02 | | ITC | COL | GRP | REMARKS |
|---|---|---|---|---|---|---|---|---|---|
| 31 | 6215-345-025-00 | WASHER/1.5 | * | 3 | | | | | |
| 32 | 6215-345-026-00 | WASHER/1.525 | * | 3 | | | | | |
| 33 | 6215-345-027-00 | WASHER/1.55 | * | 3 | | | | | |
| 34 | 6215-345-028-00 | WASHER/1.575 | * | 3 | | | | | |
| 35 | 6215-345-029-00 | WASHER/1.6 | * | 3 | | | | | |
| 36 | 6215-345-030-00 | WASHER/1.625 | * | 3 | | | | | |
| 37 | 6215-345-031-00 | WASHER/1.65 | * | 3 | | | | | |
| 38 | 6215-345-032-00 | WASHER/1.675 | * | 3 | | | | | |
| 39 | 6215-345-033-00 | WASHER/1.7 | * | 3 | | | | | |
| 40 | 6215-345-034-00 | WASHER/1.725 | * | 3 | | | | | |
| 41 | 6215-345-035-00 | WASHER/1.75 | * | 3 | | | | | |
| 42 | 6215-345-036-00 | WASHER/1.775 | * | 3 | | | | | |
| 43 | 6215-345-037-00 | WASHER/1.8 | * | 3 | | | | | |
| 44 | 6215-345-038-00 | WASHER/1.825 | * | 3 | | | | | |
| 45 | 6215-345-039-00 | WASHER/1.85 | * | 3 | | | | | |
| 46 | 6215-345-040-00 | WASHER/1.875 | * | 3 | | | | | |
| 47 | 6215-345-041-00 | WASHER/1.9 | * | 3 | | | | | |
| 48 | 6215-345-042-00 | WASHER/1.925 | * | 3 | | | | | |
| 49 | 6215-345-043-00 | WASHER/1.95 | * | 3 | | | | | |
| 50 | 6215-359-002-00 | NUT | * | 3 | | | | | |
| 51 | 6215-311-027-00 | NOZZLE ASSY | * | 3 | | | | | |
| | | | | | | | | | |
| | | | | | | | | | |
| | | | | | | | | | |
| | | | | | | | | | |
| | | | | | | | | | |
| | | | | | | | | | |
| | | | | | | | | | |
| | | | | | | | | | |
| | | | | | | | | | |

# FIG. 30 COMPONENT PARTS FOR 6215-600-103-30 ON Fig.021

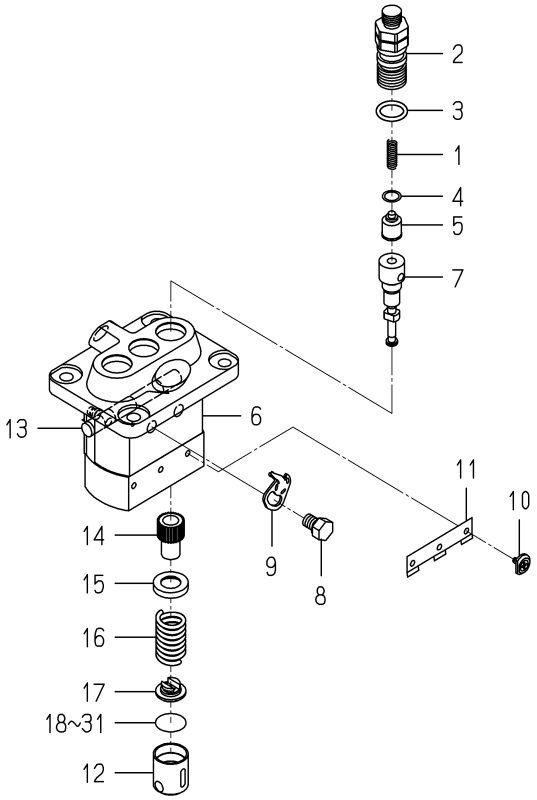


6215-600-103-3J

| KEY | PART CODE | DESCRIPTION | SPC | TYPE OF MODEL E3112 XG02 | | ITC | COL | GRP | REMARKS |
|---|---|---|---|---|---|---|---|---|---|
| 1 | 6215-643-006-00 | SPRING/DELIVERYVALVE | * | 3 | | | | | |
| 2 | 6215-644-007-00 | HOLDER/DELIVERYVALVE | * | 3 | | | | | |
| 3 | 6215-649-019-00 | ORING | * | 3 | | | | | |
| 4 | 6215-649-002-00 | GASKET/DELIVERYVALVE | * | 3 | | | | | |
| 5 | 6215-641-006-00 | VALVE ASSY | * | 3 | | | | | |
| 6 | 6215-611-001-00 | HOUSING ASSY | * | 1 | | | | | |
| 7 | 6215-631-019-00 | ELEMENT ASSY | * | 3 | | | | | |
| 8 | 6215-619-022-00 | BOLT/WASHERHEAD | * | 2 | | | | | |
| 9 | 6215-612-001-00 | PLATE/ADJUSTING | * | 2 | | | | | |
| 10 | 6215-629-001-00 | PIN/INJECTIONPUMP | * | 3 | | | | | |
| 11 | 6215-629-002-00 | PLATE | * | 1 | | | | | |
| 12 | 6215-622-001-00 | TAPPET/INJECTIO ASSY | * | 3 | | | | | |
| 13 | 6215-637-001-00 | RACK/CONTROL ASSY | * | 1 | | | | | |
| 14 | 6215-635-001-00 | SLEEVE/PLUNGER | * | 3 | | | | | |
| 15 | 6215-639-004-00 | SEAT/SPRING/UPPER | * | 3 | | | | | |
| 16 | 6215-634-001-00 | SPRING/PUMPPLUNGER | * | 3 | | | | | |
| 17 | 6215-639-005-00 | SEAT/SPRING/LOWER | * | 3 | | | | | |
| 18 | 6215-629-003-00 | PLATE/TAPPET/AD 0.6 | * | 1 | | | | | |
| 19 | 6215-629-004-00 | PLATE/TAPPET/AD 0.7 | * | 1 | | | | | |
| 20 | 6215-629-005-00 | PLATE/TAPPET/AD 0.8 | * | 1 | | | | | |
| 21 | 6215-629-006-00 | PLATE/TAPPET/AD 0.9 | * | 1 | | | | | |
| 22 | 6215-629-007-00 | PLATE/TAPPET/AD 1.0 | * | 1 | | | | | |
| 23 | 6215-629-008-00 | PLATE/TAPPET/AD 0.2 | * | 1 | | | | | |
| 24 | 6215-629-009-00 | PLATE/TAPPET/AD 0.3 | * | 1 | | | | | |
| 25 | 6215-629-010-00 | PLATE/TAPPET/AD 0.4 | * | 1 | | | | | |
| 26 | 6215-629-011-00 | PLATE/TAPPET/AD 0.5 | * | 3 | | | | | |
| 27 | 6215-629-012-00 | PLATE/TAPPET/AD 0.25 | * | 1 | | | | | |
| 28 | 6215-629-013-00 | PLATE/TAPPET/AD 0.35 | * | 1 | | | | | |
| 29 | 6215-629-014-00 | PLATE/TAPPET/AD 0.45 | * | 1 | | | | | |
| 30 | 6215-629-015-00 | PLATE/TAPPET/AD 0.55 | * | 1 | | | | | |

# FIG. 30 COMPONENT PARTS
# FOR 6215-600-103-30 ON Fig.021

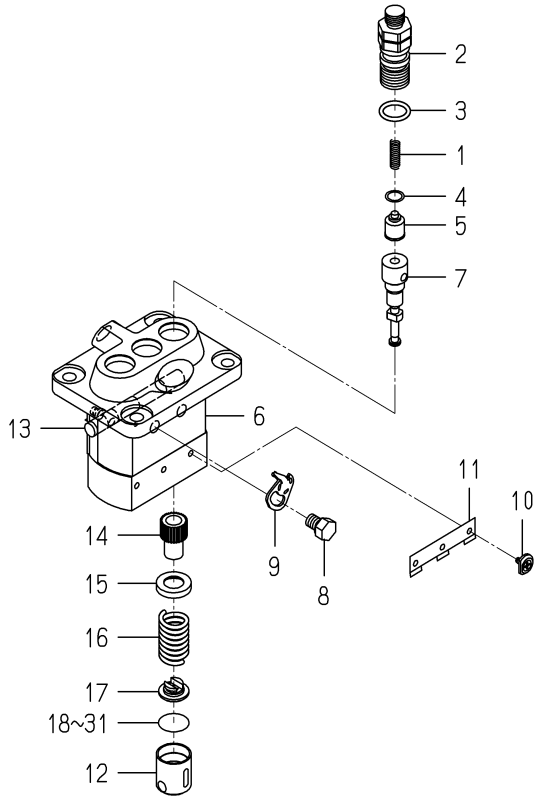


6215-600-103-3J

| KEY | PART CODE | DESCRIPTION | SPC | TYPE OF MODEL E3112 | TYPE OF MODEL XG02 | ITC | COL | GRP | REMARKS |
|---|---|---|---|---|---|---|---|---|---|
| 31 | 6215-629-016-00 | PLATE/TAPPET/AD 0.65 | * | 1 | | | | | |

# FIG. 31 COMPONENT PARTS FOR 6281-200-015-10 ON Fig.025

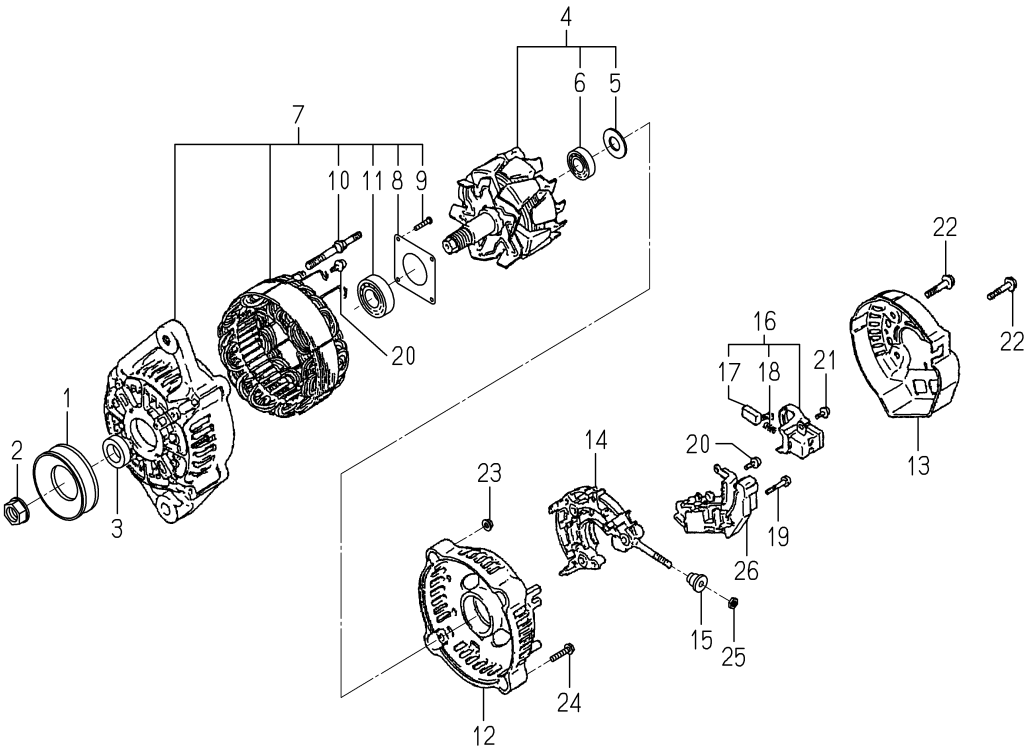


6281-200-015-1D

| KEY | PART CODE | DESCRIPTION | SPC | TYPE OF MODEL E3112 XG02 | ITC | COL | GRP | REMARKS |
|---|---|---|---|---|---|---|---|---|
| 1 | 6281-222-002-00 | PULLEY | * | 1 -538492 | | | | |
| 2 | 6281-229-002-00 | NUT | * | 1 -538492 | | | | |
| 3 | 6281-229-003-00 | COLLOR | * | 1 -538492 | | | | |
| 4 | 6281-221-004-00 | ROTOR ASSY | * | 1 -538492 | | | | |
| 5 | 6281-229-004-00 | COVER,BEARING | * | 1 -538492 | | | | |
| 6 | 6281-229-032-00 | BEARING/BALL | * | 1 -538492 | | | | |
| 7 | 6281-213-013-00 | FRAME/DRIVEEND ASSY | * | 1 -538492 | | | | |
| 8 | 6281-229-006-00 | PLATE | * | 1 -538492 | | | | |
| 9 | 6281-229-007-00 | BOLT | * | 4 -538492 | | | | |
| 10 | 6281-229-008-00 | BOLT | * | 2 -538492 | | | | |
| 11 | 6281-229-033-00 | BEARING/BALL | * | 1 -538492 | | | | |
| 12 | 6281-214-007-00 | FRAME/END/REAR | * | 1 -538492 | | | | |
| 13 | 6281-214-008-00 | COVER/END/REAR | * | 1 -538492 | | | | |
| 14 | 6281-229-040-00 | HOLDER/RECTIFIE ASSY | * | 1 -538492 | | | | |
| 15 | 6281-229-011-00 | BUSH | * | 1 -538492 | | | | |
| 16 | 6281-217-002-00 | HOLDER/BRUSH ASSY | * | 1 -538492 | | | | |
| 17 | 6281-215-001-00 | BRUSH | * | 2 -538492 | | | | |
| 18 | 6281-216-001-00 | SPRING | * | 2 -538492 | | | | |
| 19 | 6281-229-012-00 | BOLT | * | 2 -538492 | | | | |
| 20 | 6281-229-013-00 | BOLT | * | 6 -538492 | | | | |
| 21 | 6281-229-014-00 | BOLT | * | 1 -538492 | | | | |
| 22 | 6281-229-015-00 | BOLT | * | 3 -538492 | | | | |
| 23 | 6281-229-016-00 | NUT | * | 2 -538492 | | | | |
| 24 | 6281-229-017-00 | BOLT | * | 2 -538492 | | | | |
| 25 | 6281-229-018-00 | NUT | * | 1 -538492 | | | | |
| 26 | 6281-271-011-00 | REGULATOR ASSY | * | 1 -538492 | | | | |
| | | | | | | | | |
| | | | | | | | | |
| | | | | | | | | |
| | | | | | | | | |

# FIG. 32 COMPONENT PARTS FOR 6281-200-048-00 ON Fig.025

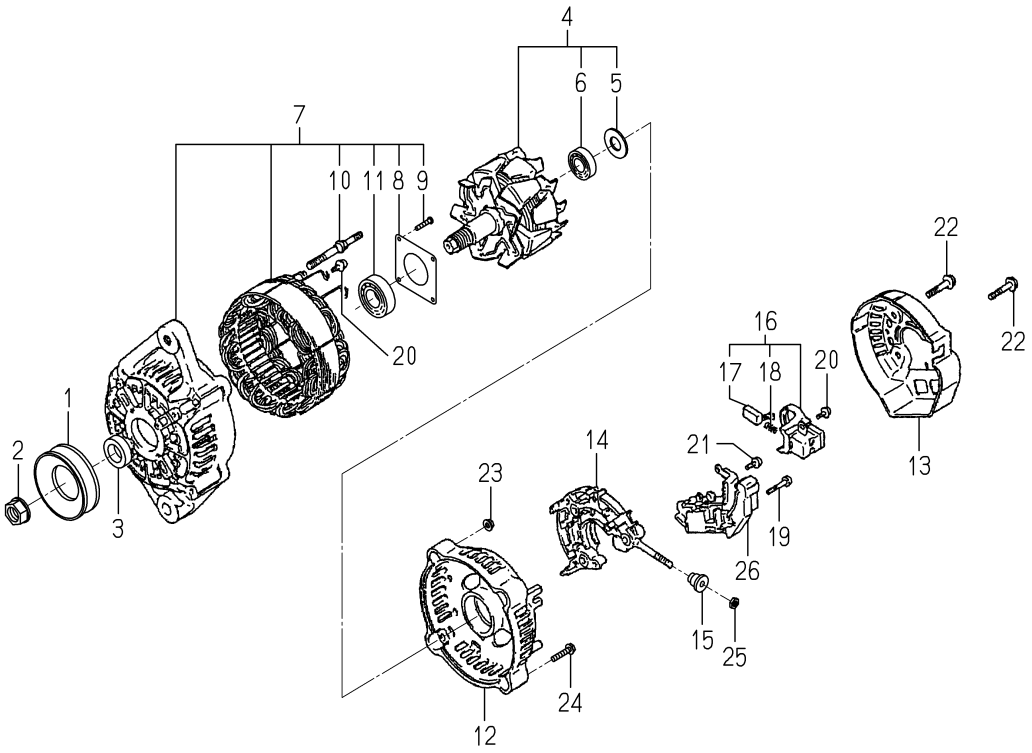


6281-200-048-0A

| KEY | PART CODE | DESCRIPTION | SPC | TYPE OF MODEL E3112 XG02 | | ITC | COL | GRP | REMARKS |
|---|---|---|---|---|---|---|---|---|---|
| 1 | 6281-222-019-00 | PULLEY | * | 1 538493- | | | | | |
| 2 | 6281-229-068-00 | NUT | * | 1 538493- | | | | | |
| 3 | 6281-229-069-00 | COLLAR/SPACE | * | 1 538493- | | | | | |
| 4 | 6281-221-010-00 | ROTOR ASSY | * | 1 538493- | | | | | |
| 5 | 6281-229-070-00 | COVER/BEARING | * | 1 538493- | | | | | |
| 6 | 6281-229-083-00 | BEARING/BALL | * | 1 538493- | | | | | |
| 7 | 6281-213-023-00 | FRAME/DRIVEEND ASSY | * | 1 538493- | | | | | |
| 8 | 6281-229-071-00 | PLATE/RETAINER | * | 1 538493- | | | | | |
| 9 | 6281-229-072-00 | SCREW | * | 4 538493- | | | | | |
| 10 | 6281-229-073-00 | BOLT/STUD | * | 2 538493- | | | | | |
| 11 | 6281-229-084-00 | BEARING/BALL | * | 1 538493- | | | | | |
| 12 | 6281-214-020-00 | FRAME/END/RR | * | 1 538493- | | | | | |
| 13 | 6281-214-018-00 | COVER/END/RR | * | 1 538493- | | | | | |
| 14 | 6281-229-085-00 | HOLDER/RECTIFIE ASSY | * | 1 538493- | | | | | |
| 15 | 6281-229-074-00 | INSULATIONBRUSH | * | 1 538493- | | | | | |
| 16 | 6281-217-005-00 | HOLDER/BRUSH ASSY | * | 1 538493- | | | | | |
| 17 | 6281-215-002-00 | BRUSH ASSY | * | 2 538493- | | | | | |
| 18 | 6281-216-002-00 | SPRING/COMPRESSION C | * | 2 538493- | | | | | |
| 19 | 6281-229-075-00 | SCREW/W/WASHER | * | 2 538493- | | | | | |
| 20 | 6281-229-076-00 | SCREW | * | 6 538493- | | | | | |
| 21 | 6281-229-077-00 | SCREW | * | 1 538493- | | | | | |
| 22 | 6281-229-078-00 | BOLT | * | 3 538493- | | | | | |
| 23 | 6281-229-079-00 | NUT | * | 2 538493- | | | | | |
| 24 | 6281-229-080-00 | BOLT | * | 2 538493- | | | | | |
| 25 | 6281-229-081-00 | NUT | * | 1 538493- | | | | | |
| 26 | 6281-271-013-00 | REGULATOR ASSY | * | 1 538493- | | | | | |
| | | | | | | | | | |
| | | | | | | | | | |
| | | | | | | | | | |
| | | | | | | | | | |

# E N G I N E

## E3FHTDEG01···SF237F

# FIG. 1 SHORT BLOCK ENGINE ASSY(OPTION)

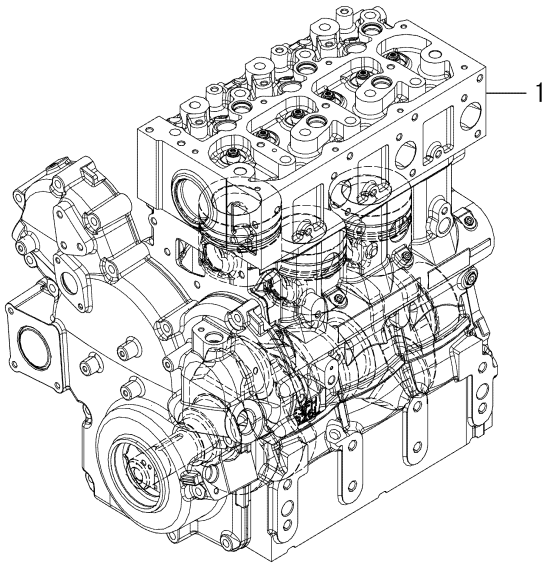


6017-011N-0100

| KEY | PART CODE | DESCRIPTION | SPC | TYPE OF MODEL | | ITC | COL | GRP | REMARKS |
|---|---|---|---|---|---|---|---|---|---|
| | | | | E3FH TDEG01 | | | | | |
| 1 | 6017-010-042-00 | SHORTBLOCKENGIN ASSY | T | 1 | | | | | |
| | | | | | | | | | |
| | | | | | | | | | |
| | | | |

# FIG. 2 CYLINDER HEAD

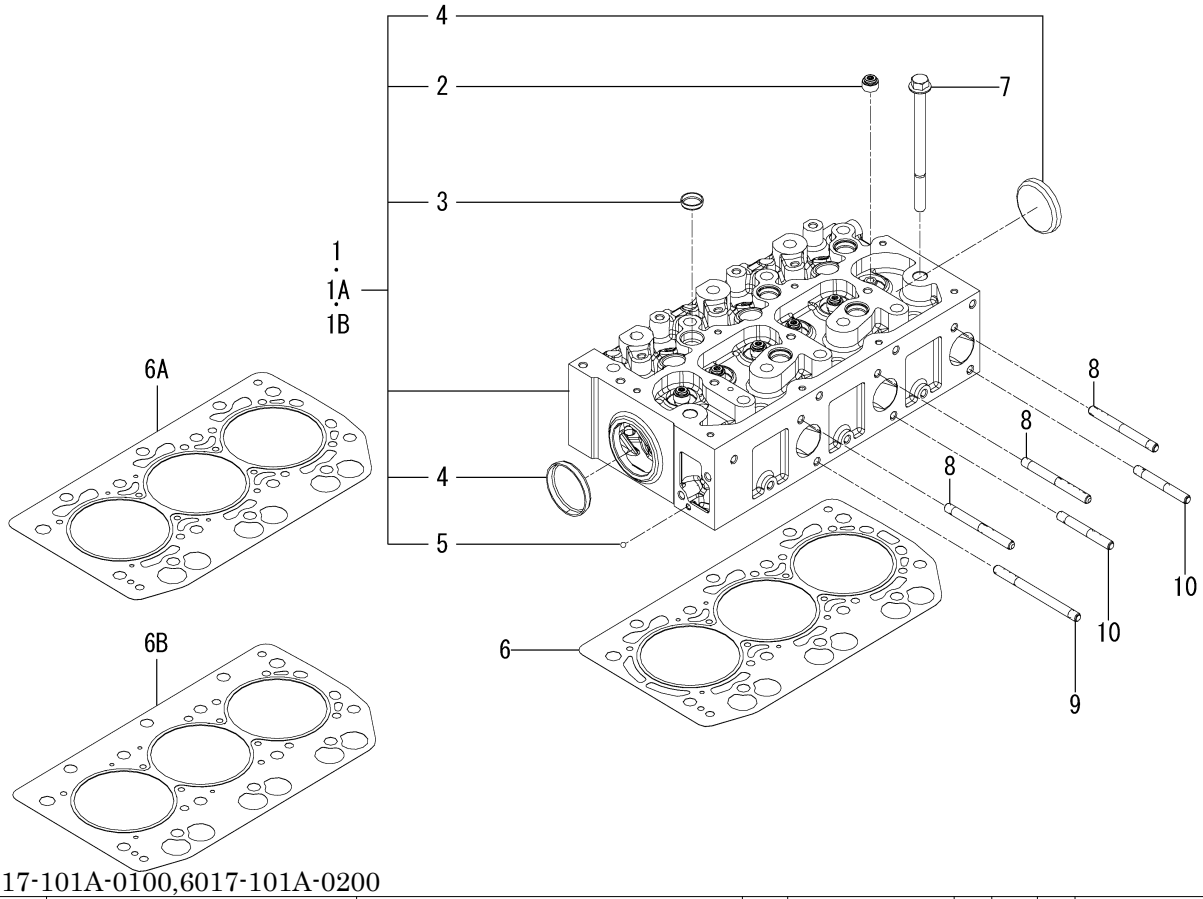


6017-101A-0100,6017-101A-0200

| KEY | PART CODE | DESCRIPTION | SPC | TYPE OF MODEL E3FH TDEG01 | | ITC | COL | GRP | REMARKS |
|---|---|---|---|---|---|---|---|---|---|
| 1 | 6211-110-123-00 | CYLINDERHEAD ASSY | * | 1 -33008 | | | | | |
| 1A | 6211-110-123-10 | CYLINDERHEAD ASSY | * | 1 -43249 | | 1 | | | |
| 1B | 6211-110-123-20 | CYLINDERHEAD ASSY | * | 1 43250- | | 1 | | | |
| 2 | 6212-569-002-00 | SEAL,OIL | * | 6 | | | | | |
| 3 | 6209-610-004-00 | CUP/SEALING/20 | * | 5 | | | | | |
| 4 | 6209-610-003-00 | CUP/SEALING/50 | * | 2 | | | | | |
| 5 | V682-200-000-60 | BALL,STEEL | * | 1 | | | | | |
| 6 | 6211-141-063-10 | GASKET/CYLINDERHEAD | * | 1 -14397 | | | | | |
| 6A | 6211-141-063-20 | GASKET/CYLINDERHEAD | * | 1 -34786 | | 1 | | | |
| 6B | 6211-141-063-30 | GASKET/CYLINDERHEAD | * | 1 34787- | | 1 | | | |
| 7 | 6209-000-049-10 | BOLT/CYLINDERHEAD | * | 14 | | | | | |
| 8 | 6209-300-008-00 | STUD | * | 3 | | | | | |
| 9 | 6209-300-028-00 | STUD | * | 1 | | | | | |
| 10 | 6209-300-034-00 | STUD | * | 2 | | | | | |

# FIG. 3 CYLINDER HEAD COVER

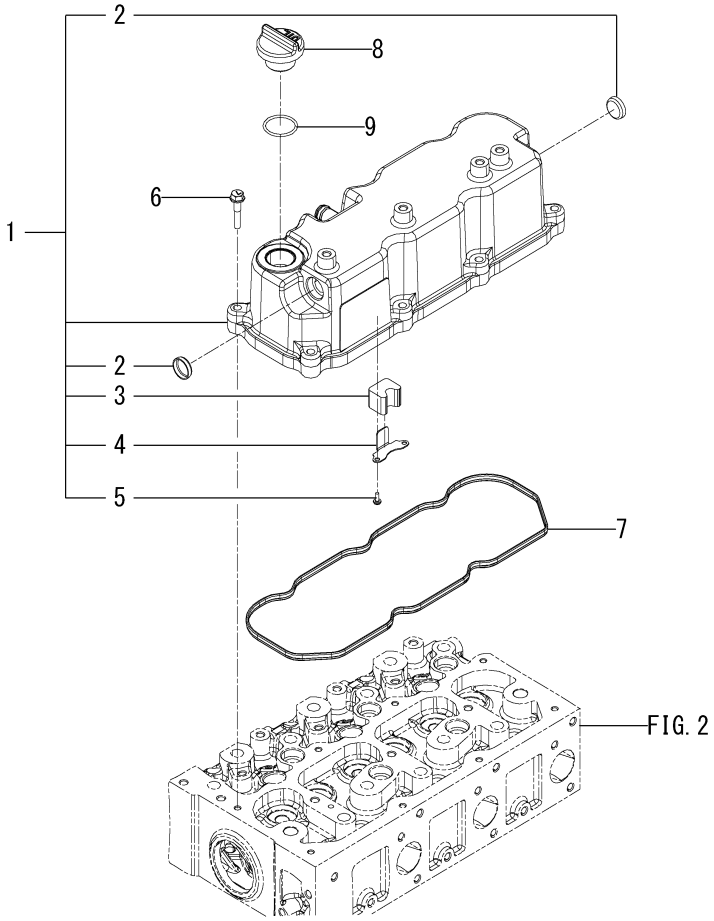


6017-110A-0100

| KEY | PART CODE | DESCRIPTION | SPC | TYPE OF MODEL E3FH TDEG01 | | ITC | COL | GRP | REMARKS |
|---|---|---|---|---|---|---|---|---|---|
| 1 | 6211-170-033-10 | COVER/CYLINDER HEAD | * | 1 | | | | | |
| 2 | 6209-610-004-00 | CUP/SEALING/20 | * | 2 | | | | | |
| 3 | 6211-179-061-10 | MESH | * | 2 | | | | | |
| 4 | 6211-179-062-10 | PLATE | * | 2 | | | | | |
| 5 | 6209-140-002-00 | SCREW/TAPPING | * | 4 | | | | | |
| 6 | V230-360-603-00 | FLANGEBOLT/M6X30 | * | 8 | | | | | |
| 7 | 6211-173-028-10 | SEAL/CYLINDER HEAD C | * | 1 | | | | | |
| 8 | 6211-751-002-10 | CAP/OILFILLER | * | 1 | | | | | |
| 9 | V720-103-502-50 | O-RING/1A,P25 | * | 1 | | | | | |

# FIG. 4 INLET MANIFOLD

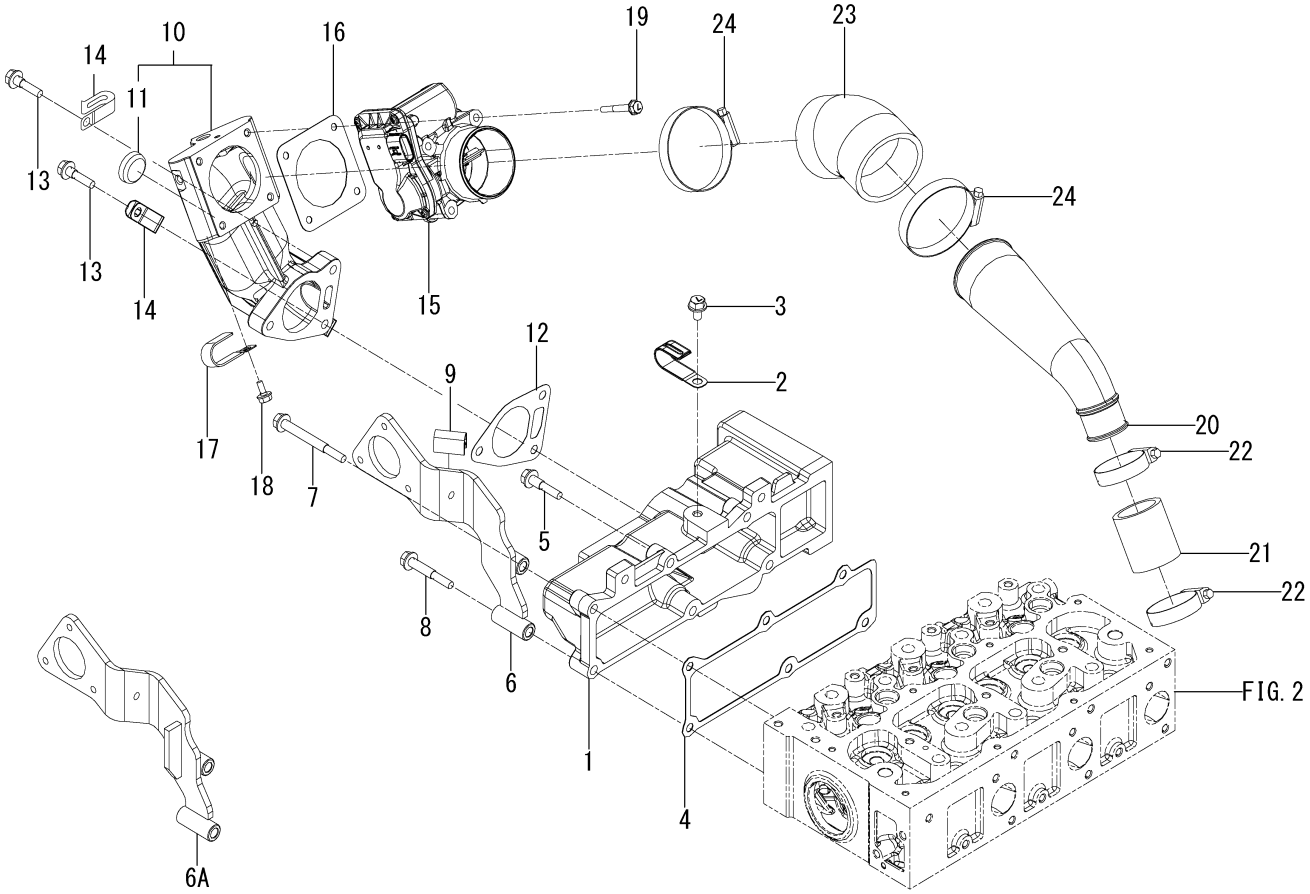


6017-120B-0100,6017-120B-0200

| KEY | PART CODE | DESCRIPTION | SPC | TYPE OF MODEL E3FH TDEG01 | | ITC | COL | GRP | REMARKS |
|---|---|---|---|---|---|---|---|---|---|
| 1 | 6214-111-036-00 | MANIFOLD/INLET | * | 1 -9092 | | | | | |
| 2 | 1425-621-004-00 | HOLDER/JE/9-9 | * | 1 -9092 | | | | | |
| 3 | V231-360-801-20 | FLANGEBOLT/M8X12 | * | 1 -9092 | | | | | |
| 4 | 6214-115-023-00 | GASKET/INLET MANIFOL | * | 1 -9092 | | | | | |
| 5 | V231-360-803-50 | FLANGEBOLT/M8X35 | * | 5 -9092 | | | | | |
| 6 | 6211-749-031-10 | STAY/BREATHER COMP | * | 1 -8952 | | | | | |
| 6A | 6211-749-031-20 | STAY/BREATHER COMP | * | 1 -9092 | | 1 | | | |
| 7 | V231-360-807-50 | FLANGEBOLT/M8X75 | * | 1 -9092 | | | | | |
| 8 | V231-360-805-00 | FLANGEBOLT/M8X50 | * | 1 -9092 | | | | | |
| 9 | 1826-410-003-00 | INSULATOR/25 | * | 1 -9092 | | | | | |
| 10 | 6214-119-043-30 | PIPE/INLET ASSY | * | 1 -9092 | | | | | |
| 11 | 6209-610-011-00 | CUP/SEALING/28 | * | 1 -9092 | | | | | |
| 12 | 6214-115-020-20 | GASKET/INLET | * | 1 -9092 | | | | | |
| 13 | V231-360-803-00 | FLANGEBOLT/M8X30 | * | 3 -9092 | | | | | |
| 14 | 1425-621-004-00 | HOLDER/JE/9-9 | * | 2 -9092 | | | | | |
| 15 | 6214-330-001-10 | VALVE/INLET ASSY | * | 1 -9092 | | | | | |
| 16 | 6214-115-021-00 | GASKET/INLETVALVE | * | 1 -9092 | | | | | |
| 17 | 3737-172-009-00 | CLAMP,MAIN HARNESS | * | 1 -9092 | | | | | |
| 18 | V230-360-601-20 | FLANGEBOLT/M6X12 | * | 1 -9092 | | | | | |
| 19 | V230-360-604-50 | FLANGEBOLT | * | 4 -9092 | | | | | |
| 20 | 6214-435-029-10 | PIPE/INLET | * | 1 -9092 | | | | | |
| 21 | 6209-360-215-10 | HOSE/TURBO | * | 1 -9092 | | | | | |
| 22 | 1656-310-004-00 | CLAMP/WORM/32-51 | * | 2 -9092 | | | | | |
| 23 | 6209-360-214-10 | HOSE/RUBBER | * | 1 -9092 | | | | | |
| 24 | J061-160-080-20 | CLAMP/WORM/60-80 | * | 2 -9092 | | | | | |
| | | | | | | | | | |
| | | | | | | | | | |
| | | | | | | | | | |
| | | | | | | | | | |
| | | | | | | | | | |

# FIG. 5 INLET MANIFOLD

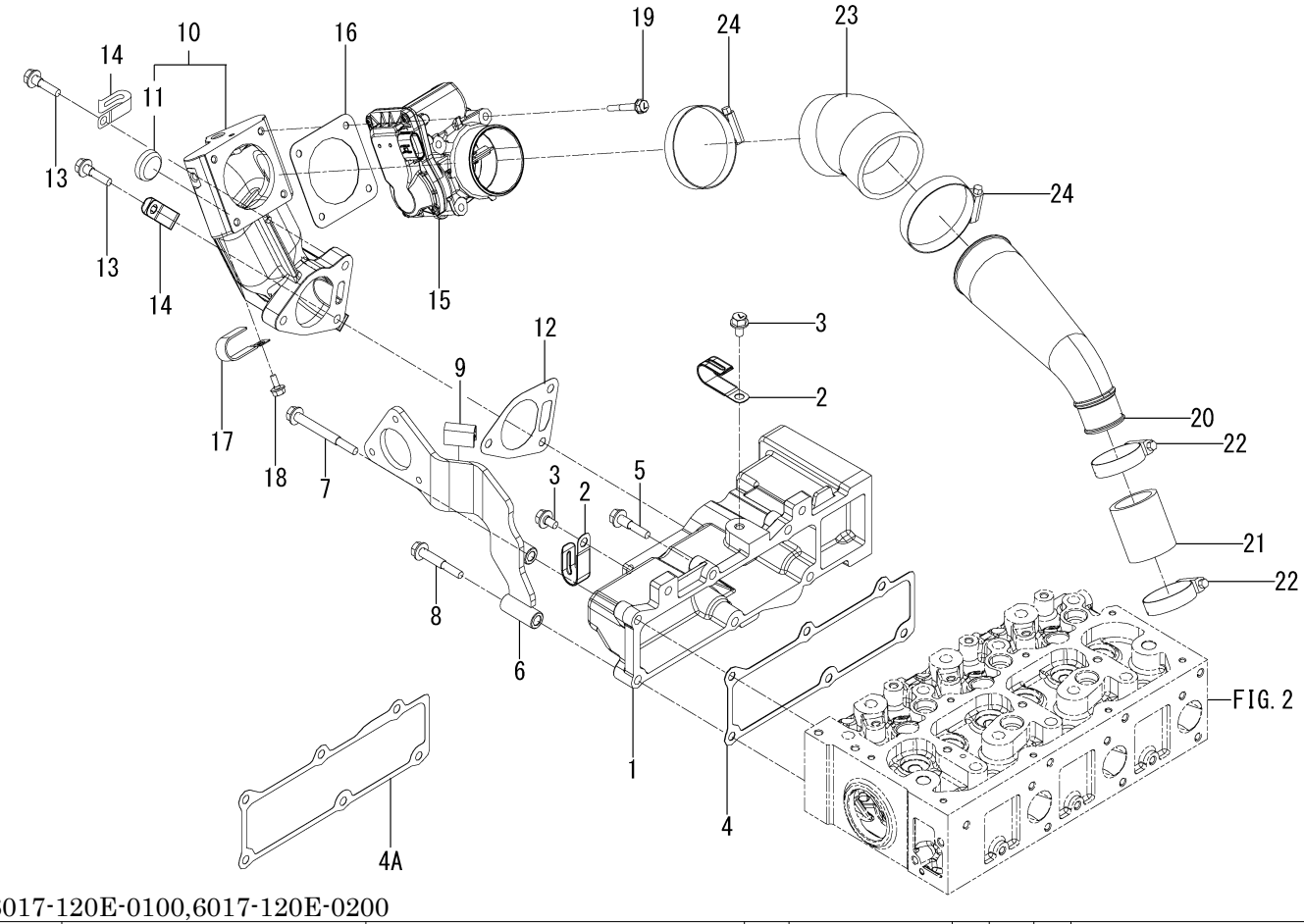


6017-120E-0100,6017-120E-0200

| KEY | PART CODE | DESCRIPTION | SPC | TYPE OF MODEL E3FH TDEG01 | | ITC | COL | GRP | REMARKS |
|---|---|---|---|---|---|---|---|---|---|
| 1 | 6214-111-036-00 | MANIFOLD/INLET | * | 1 9093- | | | | | |
| 2 | 1425-621-004-00 | HOLDER/JE/9-9 | * | 2 9093- | | | | | |
| 3 | V231-360-801-20 | FLANGEBOLT/M8X12 | * | 2 9093- | | | | | |
| 4 | 6214-115-023-00 | GASKET/INLET MANIFOL | * | 1 -31738 | | | | | |
| 4A | 6214-115-023-10 | GASKET/INLETMANIFOLD | * | 1 31739- | | 1 | | | |
| 5 | V231-360-803-50 | FLANGEBOLT/M8X35 | * | 5 9093- | | | | | |
| 6 | 6211-749-048-00 | STAY/BREATHER COMP | * | 1 9093- | | | | | |
| 7 | V231-360-807-50 | FLANGEBOLT/M8X75 | * | 1 9093- | | | | | |
| 8 | V231-360-805-00 | FLANGEBOLT/M8X50 | * | 1 9093- | | | | | |
| 9 | 1826-410-003-00 | INSULATOR/25 | * | 1 9093- | | | | | |
| 10 | 6214-119-043-30 | PIPE/INLET ASSY | * | 1 9093- | | | | | |
| 11 | 6209-610-011-00 | CUP/SEALING/28 | * | 1 9093- | | | | | |
| 12 | 6214-115-020-20 | GASKET/INLET | * | 1 9093- | | | | | |
| 13 | V231-360-803-00 | FLANGEBOLT/M8X30 | * | 3 9093- | | | | | |
| 14 | 1425-621-004-00 | HOLDER/JE/9-9 | * | 2 9093- | | | | | |
| 15 | 6214-330-001-20 | VALVE/INLET ASSY | * | 1 9093- | | | | | |
| 16 | 6214-115-021-00 | GASKET/INLETVALVE | * | 1 9093- | | | | | |
| 17 | 3737-172-009-00 | CLAMP,MAIN HARNESS | * | 1 9093- | | | | | |
| 18 | V230-360-601-20 | FLANGEBOLT/M6X12 | * | 1 9093- | | | | | |
| 19 | V230-360-604-50 | FLANGEBOLT | * | 4 9093- | | | | | |
| 20 | 6214-435-029-10 | PIPE/INLET | * | 1 9093- | | | | | |
| 21 | 6209-360-215-10 | HOSE/TURBO | * | 1 9093- | | | | | |
| 22 | 6209-704-011-00 | CLAMP/WORM/38-50 | * | 2 9093- | | | | | |
| 23 | 6209-360-214-10 | HOSE/RUBBER | * | 1 9093- | | | | | |
| 24 | J061-160-080-20 | CLAMP/WORM/60-80 | * | 2 9093- | | | | | |
| | | | | | | | | | |
| | | | | | | | | | |
| | | | | | | | | | |
| | | | | | | | | | |
| | | | | | | | | | |

# FIG. 6 EXHAUST MANIFOLD

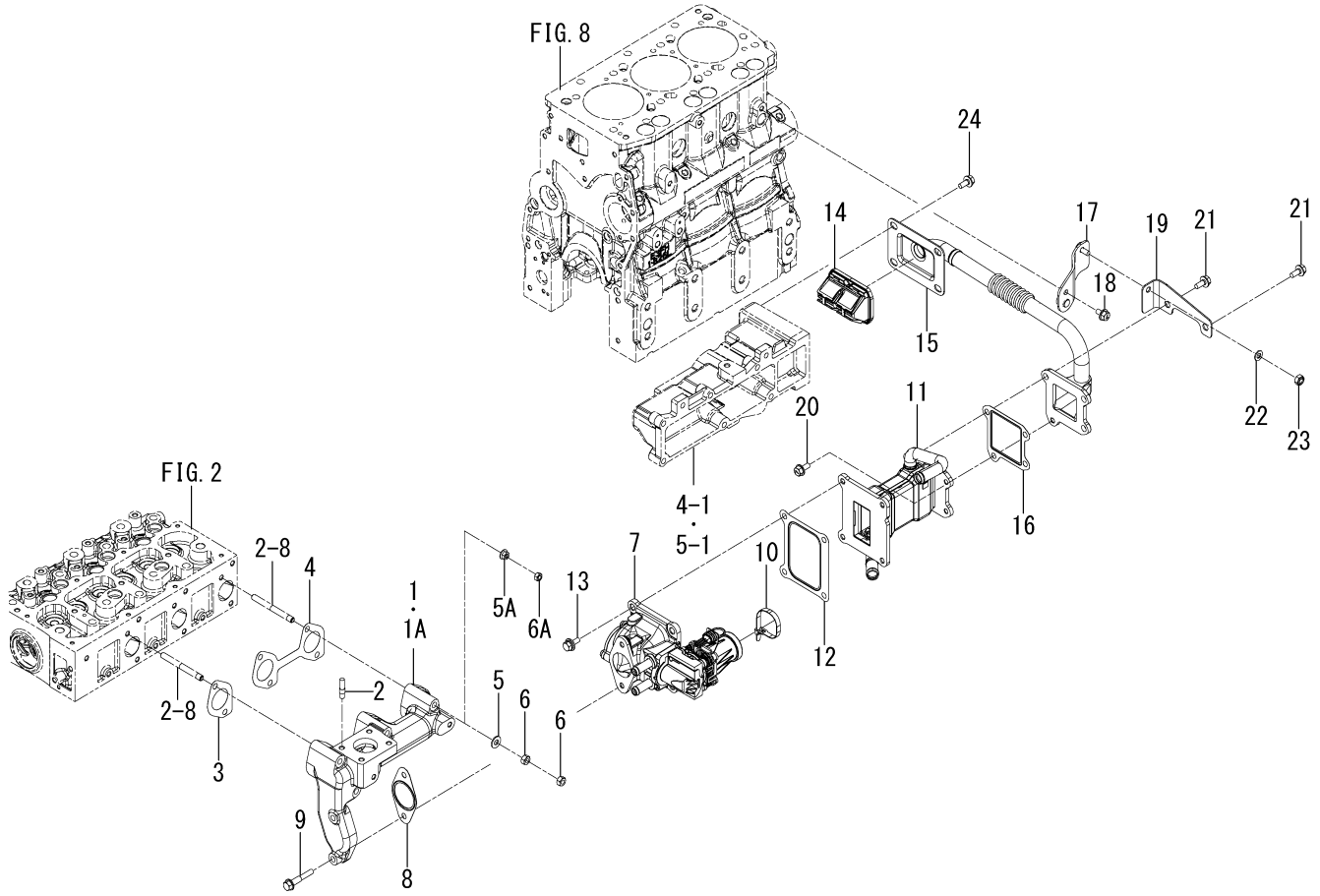


6017-140C-0100,6017-140C-0200

| KEY | PART CODE | DESCRIPTION | SPC | TYPE OF MODEL E3FH TDEG01 | | ITC | COL | GRP | REMARKS |
|---|---|---|---|---|---|---|---|---|---|
| 1 | 6214-141-067-10 | MANIFOLD/EXHAUST | * | 1 -11321 | | | | | |
| 1A | 6214-141-067-20 | MANIFOLD/EXHAUST | * | 1 11322- | | 1 | | | |
| 2 | 6209-300-026-00 | STUD | * | 4 | | | | | |
| 3 | 6214-145-035-00 | GASKET/EXH/SINGLE | * | 1 | | | | | |
| 4 | 6214-145-036-00 | GASKET/EXH/DOUBLE | * | 1 | | | | | |
| 5 | V411-700-008-00 | WASHER,PL/M8 | * | 6 -43392 | | | | | |
| 5A | 3817-401-001-00 | NUT/M08 | * | 6 43393- | | | | | |
| 6 | V304-700-008-00 | NUT,SUS/M8 | * | 12 -43392 | | | | | |
| 6A | V304-460-008-00 | NUT/M8/7T | * | 6 43393- | | | | | |
| 7 | 6214-152-010-00 | VALVE/EGR ASSY | * | 1 | | | | | |
| 8 | 6214-146-007-00 | GASKET/EGRVALVE | * | 1 | | | | | |
| 9 | 6209-009-009-00 | FLANGEBOLT | * | 2 | | | | | |
| 10 | 1342-402-006-00 | BAND,WIRE/250 | * | 1 | | | | | |
| 11 | 6214-153-015-00 | EGRCOOLER COMP | * | 1 | | | | | |
| 12 | 6214-146-004-10 | GASKET/EGR/COOLER | * | 1 | | | | | |
| 13 | 2186-738-059-00 | BOLT/M8X20/SP/S | * | 4 | | | | | |
| 14 | 6214-152-011-00 | REEDVALVE/EGR | * | 1 | | | | | |
| 15 | 6214-439-037-20 | PIPE/EGR COMP | * | 1 | | | | | |
| 16 | 6214-146-006-10 | GASKET/EGR/PIPE | * | 1 | | | | | |
| 17 | 6214-439-049-00 | STAY/EGR COMP | * | 1 | | | | | |
| 18 | V231-360-801-20 | FLANGEBOLT/M8X12 | * | 1 | | | | | |
| 19 | 6214-439-048-10 | PLATE/EGR | * | 1 | | | | | |
| 20 | V231-360-801-60 | FLANGEBOLT/M8X16 | * | 1 | | | | | |
| 21 | V231-360-802-00 | FLANGEBOLT/M8X20 | * | 3 | | | | | |
| 22 | 6209-500-005-00 | WASHER/08X15.5X1.6 | * | 1 -39562 | | | | | |
| 23 | 1719-312-001-00 | U-NUT | * | 1 | | | | | |
| 24 | V231-360-801-60 | FLANGEBOLT/M8X16 | * | 4 | | | | | |
| | | | | | | | | | |
| | | | | | | | | | |
| | | | | | | | | | |

# FIG. 7 TURBO CHARGER

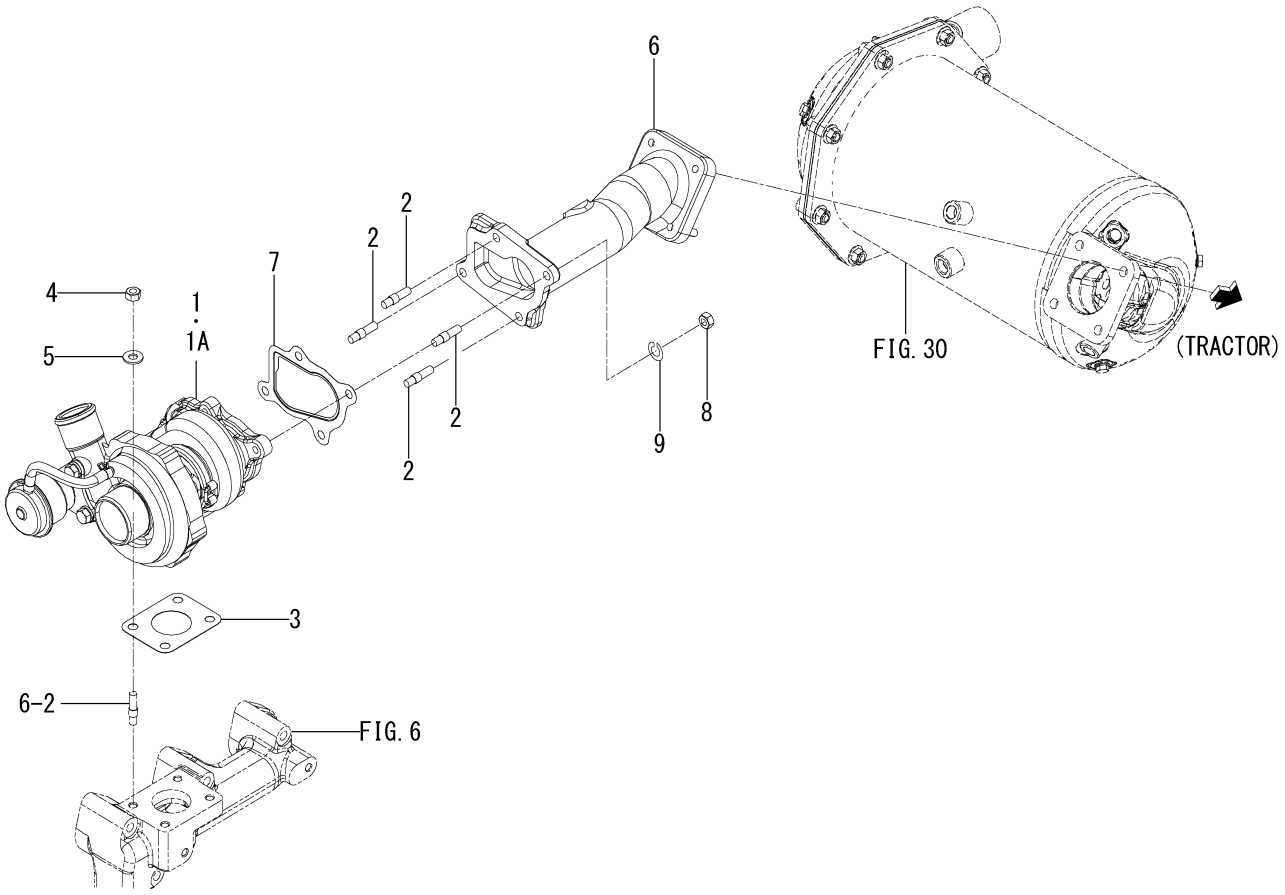


6017-160B-0100

| KEY | PART CODE | DESCRIPTION | SPC | TYPE OF MODEL E3FH TDEG01 | | ITC | COL | GRP | REMARKS |
|---|---|---|---|---|---|---|---|---|---|
| 1 | 6214-400-025-00 | TURBOCHARGER ASSY | * | 1 -10981 | | | | | |
| 1A | 6214-400-025-10 | TURBOCHARGER ASSY | * | 1 10982- | | 1 | | | |
| 2 | 6904-130-825-00 | STUD | * | 4 | | | | | |
| 3 | 6214-145-009-00 | GASKET | * | 1 | | | | | |
| 4 | V304-700-008-00 | NUT,SUS/M8 | * | 4 | | | | | |
| 5 | V411-700-008-00 | WASHER,PL/M8 | * | 4 | | | | | |
| 6 | 6214-144-008-20 | ELBOW/DPF | * | 1 | | | | | |
| 7 | 6214-145-031-10 | GASKET/TURBO | * | 1 | | | | | |
| 8 | V304-700-008-00 | NUT,SUS/M8 | * | 4 | | | | | |
| 9 | V401-700-008-00 | WASHER,SP/M8 | * | 4 | | | | | |

# FIG. 8 CYLINDER BLOCK(1/2)

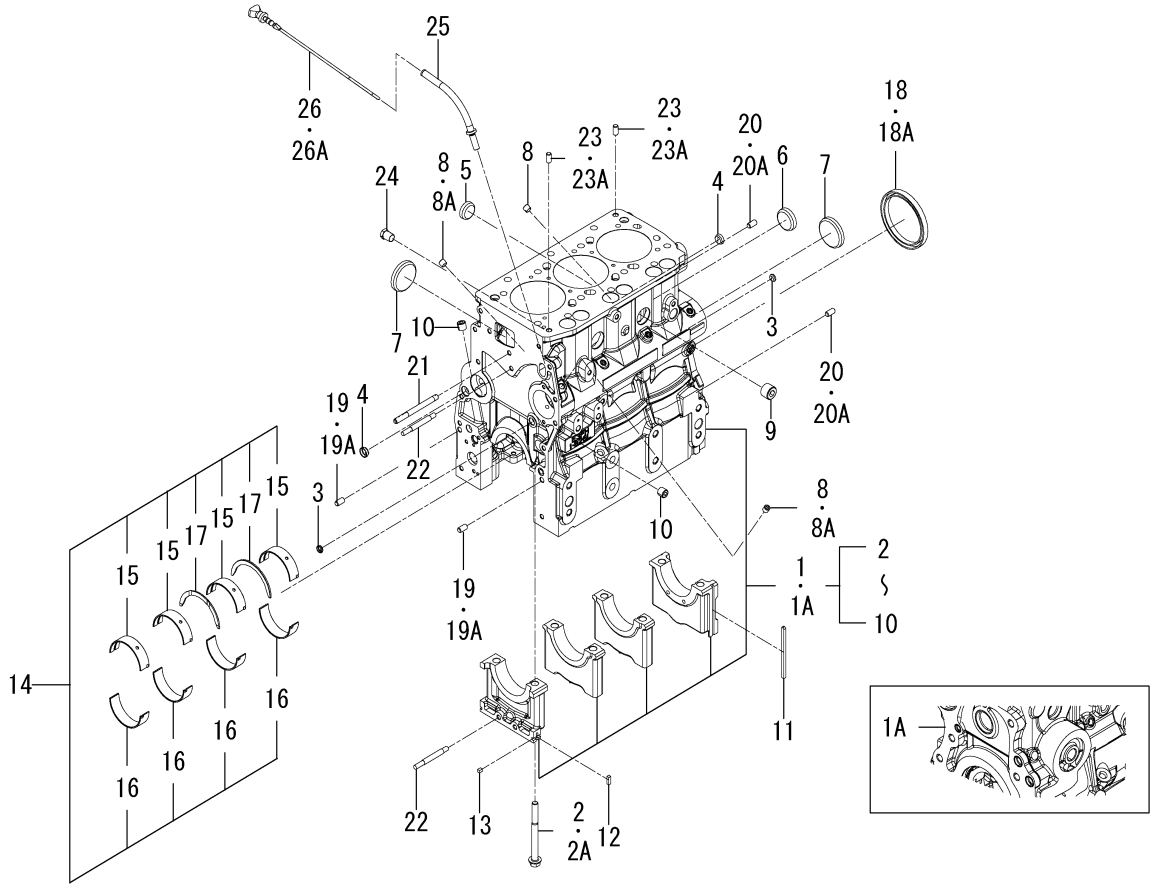


6017-201G-0100

| KEY | PART CODE | DESCRIPTION | SPC | TYPE OF MODEL E3FH TDEG01 | ITC | COL | GRP | REMARKS |
|---|---|---|---|---|---|---|---|---|
| 1 | 6211-210-117-30 | CYLINDERBLOCK ASSY | * | 1 -11150 | | | | |
| 1A | 6211-210-117-40 | CYLINDERBLOCK ASSY | * | 1 -43557 | 1 | | | |
| 1B | 6211-210-117-50 | CYLINDERBLOCK ASSY | * | 1 43558- | 1 | | | |
| 2 | 6209-000-007-00 | BOLT | * | 8 -11150 | | | | |
| 2A | 6209-000-007-10 | BOLT | * | 8 11151- | 1 | | | |
| 3 | 6209-610-008-00 | CUP/SEALING/12 | * | 2 | | | | |
| 4 | 6209-610-007-00 | CUP/SEALING/16 | * | 3 | | | | |
| 5 | 6209-610-001-10 | CUP/SEALING/28 | * | 1 | | | | |
| 6 | 6209-610-009-00 | CUP/SEALING/36 | * | 1 | | | | |
| 7 | 6209-610-003-00 | CUP/SEALING/50 | * | 3 | | | | |
| 8 | 6209-605-007-10 | PLUG/PT1/8 | * | 6 -43557 | | | | |
| 8A | 6209-605-007-10 | PLUG/PT1/8 | * | 5 43558- | | | | |
| 9 | 6209-605-004-10 | PLUG/PT1/2 | * | 1 | | | | |
| 10 | 6209-605-003-20 | PLUG/PT1/4 | * | 3 | | | | |
| 11 | 6211-258-006-00 | SEAL/BEARINGCAP | * | 2 | | | | |
| 12 | 6211-258-007-00 | SEAL/BEARINGCAP/14 | * | 2 | | | | |
| 13 | 6211-258-002-00 | SEAL,BEARING CAP/7 | * | 2 | | | | |
| 14 | 6211-510-023-00 | BEARING/CRANKSET | * | 1 | | | | |
| 15 | 6211-511-025-00 | BEARING/CRANK/UPPER | * | 4 | | | | |
| 16 | 6211-511-026-00 | BEARING/CRANK/LOWER | * | 4 | | | | |
| 17 | 6211-599-011-00 | BEARING/THRUST/CRANK | * | 2 | | | | |
| 18 | 6209-625-014-00 | OILSEAL | * | 1 -42964 | | | | |
| 18A | 6209-625-003-20 | OILSEAL | * | 1 42965- | | | | |
| 19 | 6213-129-006-00 | PIN/STRAIGHT | * | 2 -43420 | | | | |
| 19A | V523-100-801-60 | PIN,ST,B/8X16 | * | 2 43421- | | | | |
| 20 | 6213-129-006-00 | PIN/STRAIGHT | * | 2 -43420 | | | | |
| 20A | V523-100-801-60 | PIN,ST,B/8X16 | * | 2 43421- | | | | |
| 21 | 6209-300-007-00 | STUD | * | 1 | | | | |
| 22 | V251-340-806-00 | STUD/M8X60/7T | * | 2 | | | | |
| 23 | 6213-129-006-00 | PIN/STRAIGHT | * | 2 -43420 | | | | |

# FIG. 8 CYLINDER BLOCK(2/2)

23～26A-PLEASE SEE 1/2 PAGE

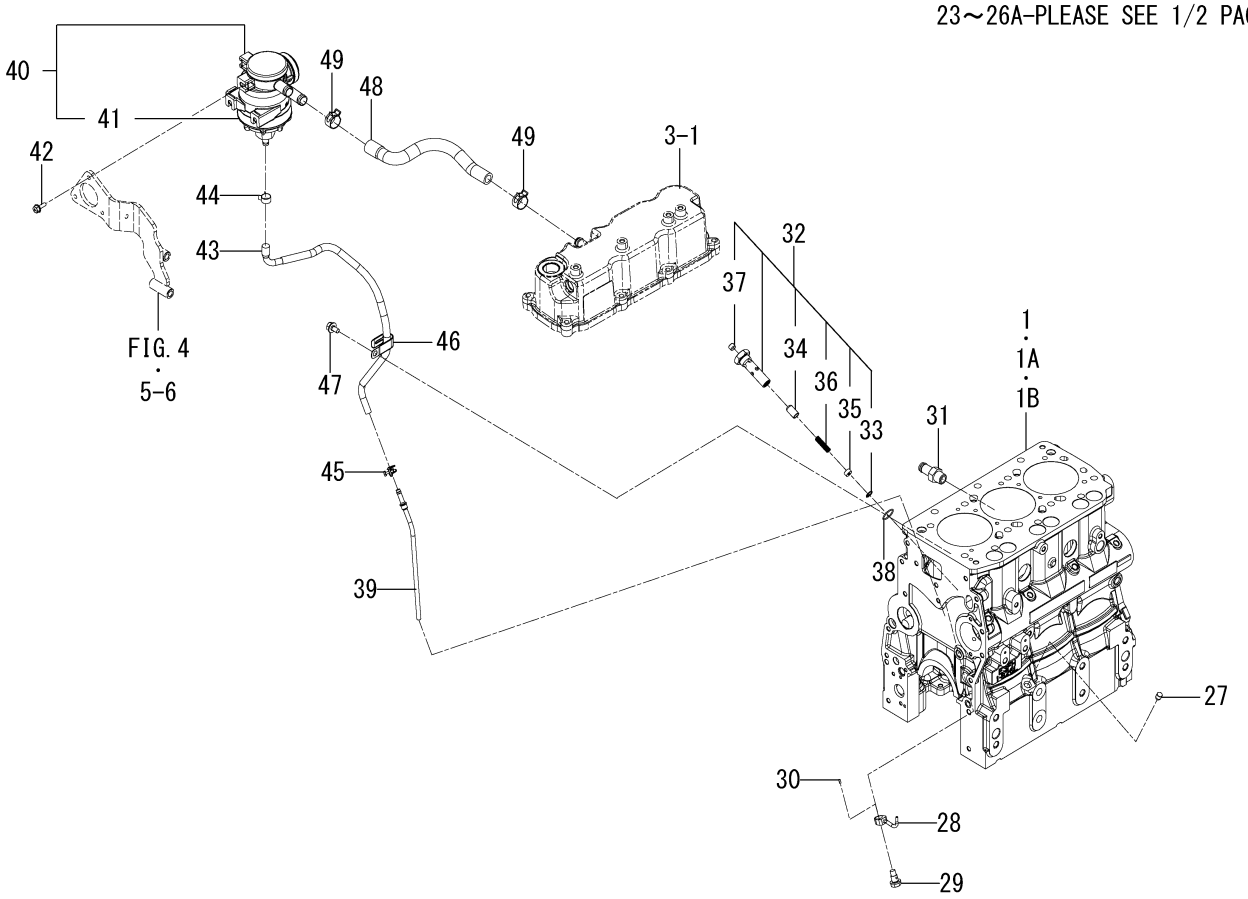


6017-201G-0100

| KEY | PART CODE | DESCRIPTION | SPC | TYPE OF MODEL E3FH TDEG01 | | ITC | COL | GRP | REMARKS |
|---|---|---|---|---|---|---|---|---|---|
| 23A | V523-100-801-60 | PIN,ST,B/8X16 | * | 2 | 43421- | | | | |
| 24 | V782-160-000-4T | PLUG/SCREW/SEAL | * | 1 | | | | | |
| 25 | 6211-766-025-00 | GUIDE/LEVELGAGE COMP | * | 1 | | | | | |
| 26 | 6211-760-089-00 | LEVELGAUGE | * | 1 | -18371 | | | | |
| 26A | 6211-760-089-10 | LEVELGAUGE | * | 1 | 18372- | | 1 | | |
| 27 | 6211-769-007-00 | PLUG/LEVELGAUGE | * | 1 | | | | | |
| 28 | 6213-342-016-00 | PIPE/OILJET | * | 3 | | | | | |
| 29 | 6213-342-007-00 | EYEBOLT/OILJET ASSY | * | 3 | | | | | |
| 30 | 6209-740-008-00 | PIN/SPRING | * | 3 | | | | | |
| 31 | 6213-721-015-00 | PIPE/WATER/HOUSING | * | 1 | | | | | |
| 32 | 6213-160-013-10 | VALVE/RELIEF ASSY | * | 1 | | | | | |
| 33 | V705-140-012-00 | RING,SNAP/12 C | * | 1 | | | | | |
| 34 | 6213-161-003-10 | PISTON/VALVE/RELIEF | * | 1 | | | | | |
| 35 | 6213-163-007-10 | SIM/RELIEFVALVE | * | 1 | | | | | |
| 36 | 6213-164-001-00 | SPRING/RELIEF VALVE | * | 1 | | | | | |
| 37 | V780-140-000-2B | PLUG/SCREW/SEAL | * | 1 | | | | | |
| 38 | V720-102-401-80 | O-RING/1A,P18 | * | 1 | | | | | |
| 39 | 6211-742-036-00 | PIPE/BREATHER | * | 1 | | | | | |
| 40 | 6211-740-022-00 | BREATHER ASSY | * | 1 | | | | | |
| 41 | 6211-745-005-10 | ELEMENTKIT | * | 1 | | | | | |
| 42 | V230-360-601-60 | FLANGEBOLT/M6X16 | * | 3 | | | | | |
| 43 | 6209-360-228-10 | HOSE/BREATHER/DRAIN | * | 1 | | | | | |
| 44 | J062-126-134-00 | CLIP/HOSE/12.6-13.4 | * | 1 | | | | | |
| 45 | J061-208-010-00 | CLAMP/WIRE/08-10 | * | 1 | | | | | |
| 46 | 1425-621-004-00 | HOLDER/JE/9-9 | * | 1 | | | | | |
| 47 | V231-360-801-20 | FLANGEBOLT/M8X12 | * | 1 | | | | | |
| 48 | 6209-360-227-00 | HOSE/BLOWBY | * | 1 | | | | | |
| 49 | 1650-780-011-10 | CLIP/HOSE/18-22 | * | 2 | | | | | |
| | | | | | | | | | |
| | | | | | | | | | |

# FIG. 9 BEARING/UNDER SIZE (OPTION)

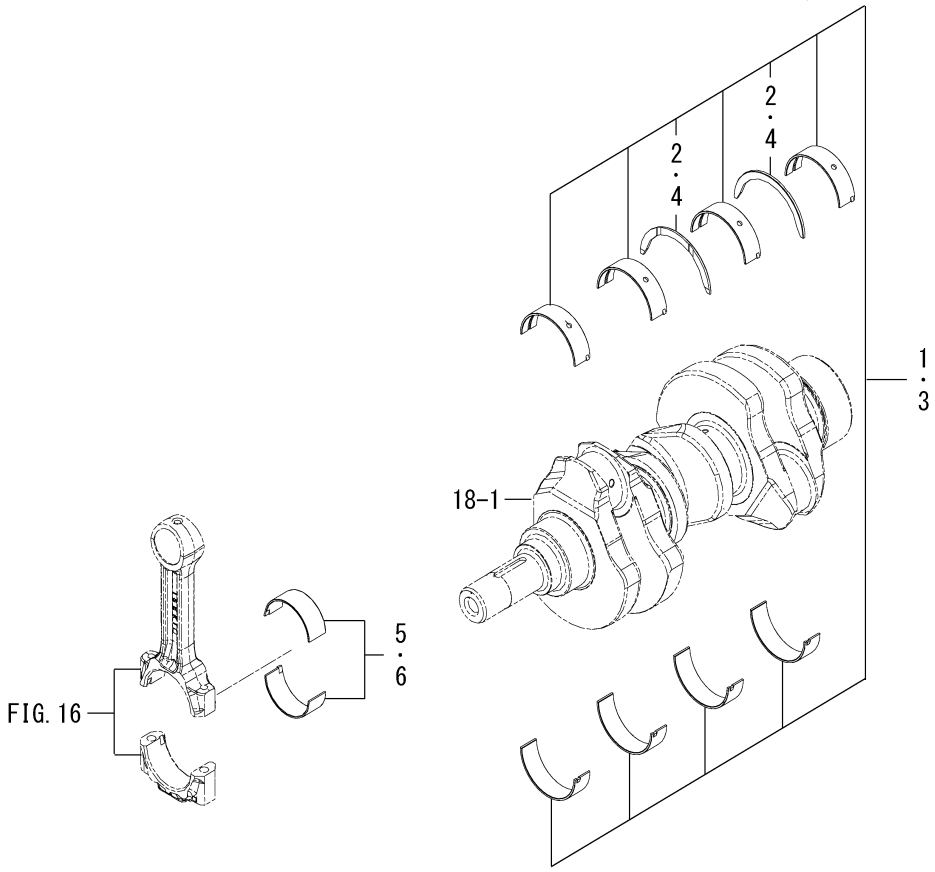


6017-209 -0100

| KEY | PART CODE | DESCRIPTION | SPC | TYPE OF MODEL | | ITC | COL | GRP | REMARKS |
|---|---|---|---|---|---|---|---|---|---|
| | | | | E3FH TDEG01 | | | | | |
| 1 | 6211-540-020-00 | BRG/CRANK/UN050 SET | T | 1 | | | | | |
| 2 | 6211-599-011-00 | BEARING/THRUST/CRANK | T | 2 | | | | | |
| 3 | 6211-560-009-00 | BRG/CRANK/UN100 SET | T | 1 | | | | | |
| 4 | 6211-599-011-00 | BEARING/THRUST/CRANK | T | 2 | | | | | |
| 5 | 6212-273-017-00 | BRG/CONROD/UN025 SET | T | 3 | | | | | |
| 6 | 6212-274-017-00 | BRG/CONROD/UN050 SET | T | 3 | | | | | |

# FIG. 10 OIL PAN

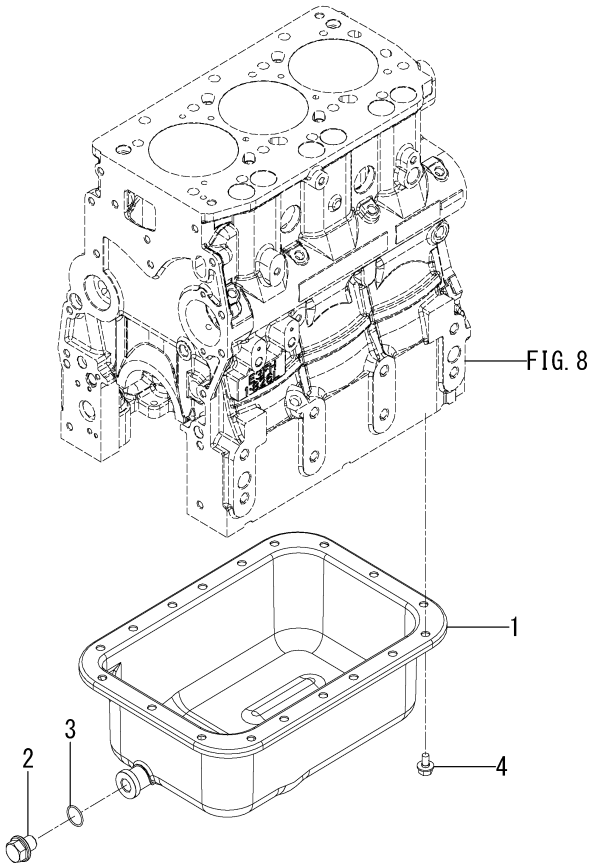


6017-210A-0100

| KEY | PART CODE | DESCRIPTION | SPC | TYPE OF MODEL | | ITC | COL | GRP | REMARKS |
|---|---|---|---|---|---|---|---|---|---|
| | | | | E3FH TDEG01 | | | | | |
| 1 | 6211-361-110-00 | OILPAN COMP | * | 1 | | | | | |
| 2 | 3805-355-002-20 | PLUG/M14X1.5 | * | 1 | | | | | |
| 3 | V720-102-401-80 | O-RING/1A,P18 | * | 1 | | | | | |
| 4 | V231-360-801-20 | FLANGEBOLT/M8X12 | * | 18 | | | | | |

# FIG. 11 REAR PLATE

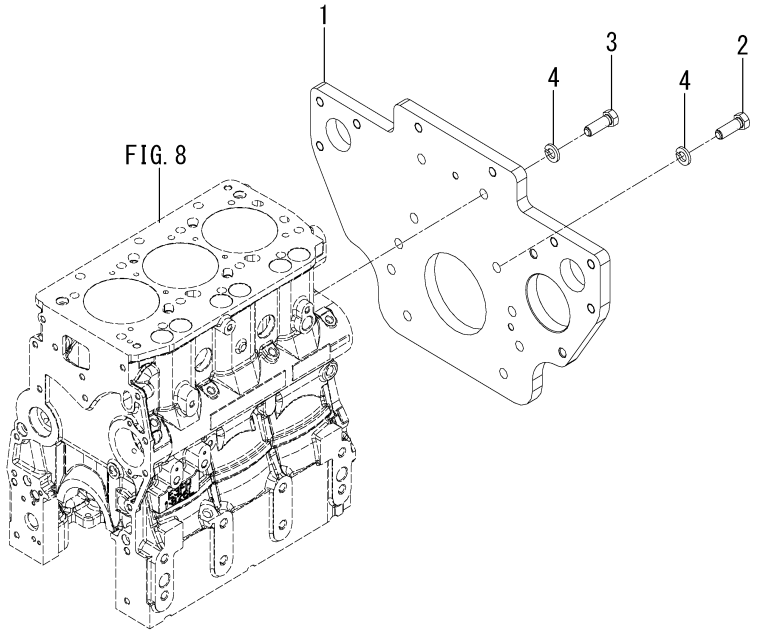


6017-220G-0100

| KEY | PART CODE | DESCRIPTION | SPC | TYPE OF MODEL E3FH TDEG01 | | ITC | COL | GRP | REMARKS |
|---|---|---|---|---|---|---|---|---|---|
| 1 | 6211-341-147-00 | PLATE/REAR | * | 1 | | | | | |
| 2 | 6209-000-054-00 | BOLT | * | 8 | | | | | |
| 3 | 6209-000-061-00 | BOLT/M12X1.5X40 | * | 2 | | | | | |
| 4 | V401-160-012-00 | WASHER,SP/M12 | * | 10 | | | | | |

# FIG. 12 TIMING GEAR CASE

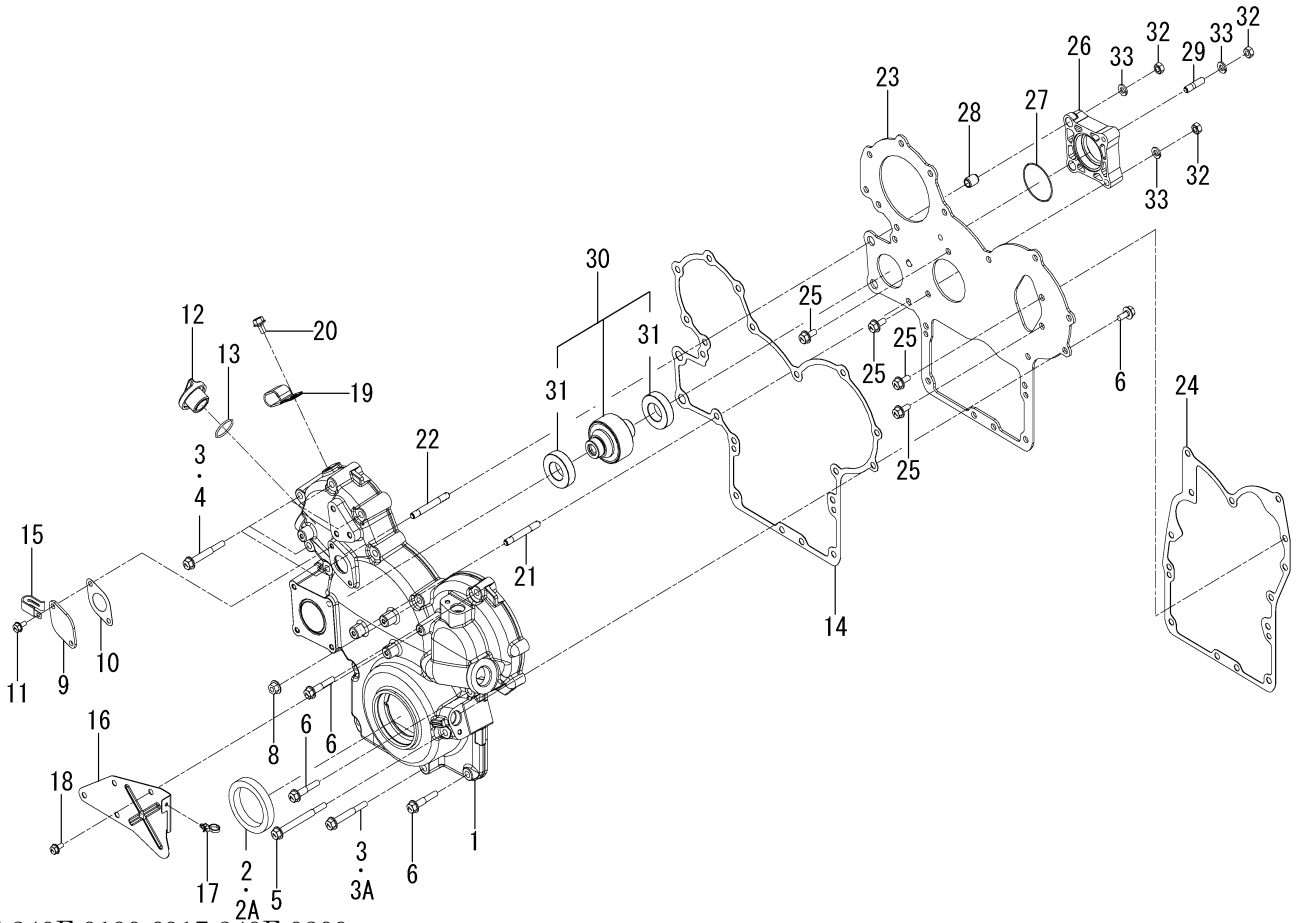


6017-240F-0100,6017-240F-0200

| KEY | PART CODE | DESCRIPTION | SPC | TYPE OF MODEL E3FH TDEG01 | | ITC | COL | GRP | REMARKS |
|---|---|---|---|---|---|---|---|---|---|
| 1 | 6211-311-119-00 | GEARCASE | * | 1 | | | | | |
| 2 | 6209-625-015-00 | OILSEAL | * | 1 -42964 | | | | | |
| 2A | 6209-625-004-00 | OILSEAL | * | 1 42965- | | | | | |
| 3 | V231-360-806-00 | FLANGEBOLT/M8X60 | * | 9 -34612 | | | | | |
| 3A | V231-360-806-00 | FLANGEBOLT/M8X60 | * | 4 34613- | | | | | |
| 4 | V231-360-806-50 | FLANGEBOLT/M8X65 | * | 5 34613- | | | | | |
| 5 | V231-360-808-50 | FLANGEBOLT/M8X85 | * | 1 | | | | | |
| 6 | V231-360-804-00 | FLANGEBOLT/M8X40 | * | 3 | | | | | |
| 7 | V231-360-801-60 | FLANGEBOLT/M8X16 | * | 3 | | | | | |
| 8 | 3817-401-001-00 | NUT/M08 | * | 2 | | | | | |
| 9 | 6211-321-023-00 | COVER/HPP | * | 1 | | | | | |
| 10 | 6211-312-032-00 | GASKET/COVER | * | 1 | | | | | |
| 11 | V230-360-601-20 | FLANGEBOLT/M6X12 | * | 2 | | | | | |
| 12 | 6211-751-002-10 | CAP/OILFILLER | * | 1 | | | | | |
| 13 | V720-103-502-50 | O-RING/1A,P25 | * | 1 | | | | | |
| 14 | 6211-312-031-50 | GASKET/GEARCASE | * | 1 | | | | | |
| 15 | 3737-172-009-00 | CLAMP,MAIN HARNESS | * | 1 | | | | | |
| 16 | 6219-759-004-00 | COVER/HARNESS | * | 1 | | | | | |
| 17 | 6281-999-043-00 | BAND/HARNESS | * | 1 | | | | | |
| 18 | V230-360-601-20 | FLANGEBOLT/M6X12 | * | 4 | | | | | |
| 19 | 6209-700-007-00 | CLAMP/HARNESS | * | 1 | | | | | |
| 20 | V231-360-801-20 | FLANGEBOLT/M8X12 | * | 1 | | | | | |
| 21 | 6904-110-850-00 | STUD | * | 1 | | | | | |
| 22 | 6904-110-855-00 | STUD | * | 2 | | | | | |
| 23 | 6211-311-101-40 | PLATE/FRONT | * | 1 | | | | | |
| 24 | 6211-312-030-60 | GASKET/PLATE | * | 1 | | | | | |
| 25 | V231-360-801-60 | FLANGEBOLT/M8X16 | * | 4 | | | | | |
| 26 | 6211-319-028-10 | SPACER/HYDRAULIC | * | 1 | | | | | |
| 27 | V723-102-005-00 | O-RING/1A,S50 | * | 1 | | | | | |
| 28 | 6209-749-001-30 | PIN/TUBE | * | 2 | | | | | |

# FIG. 12 TIMING GEAR CASE

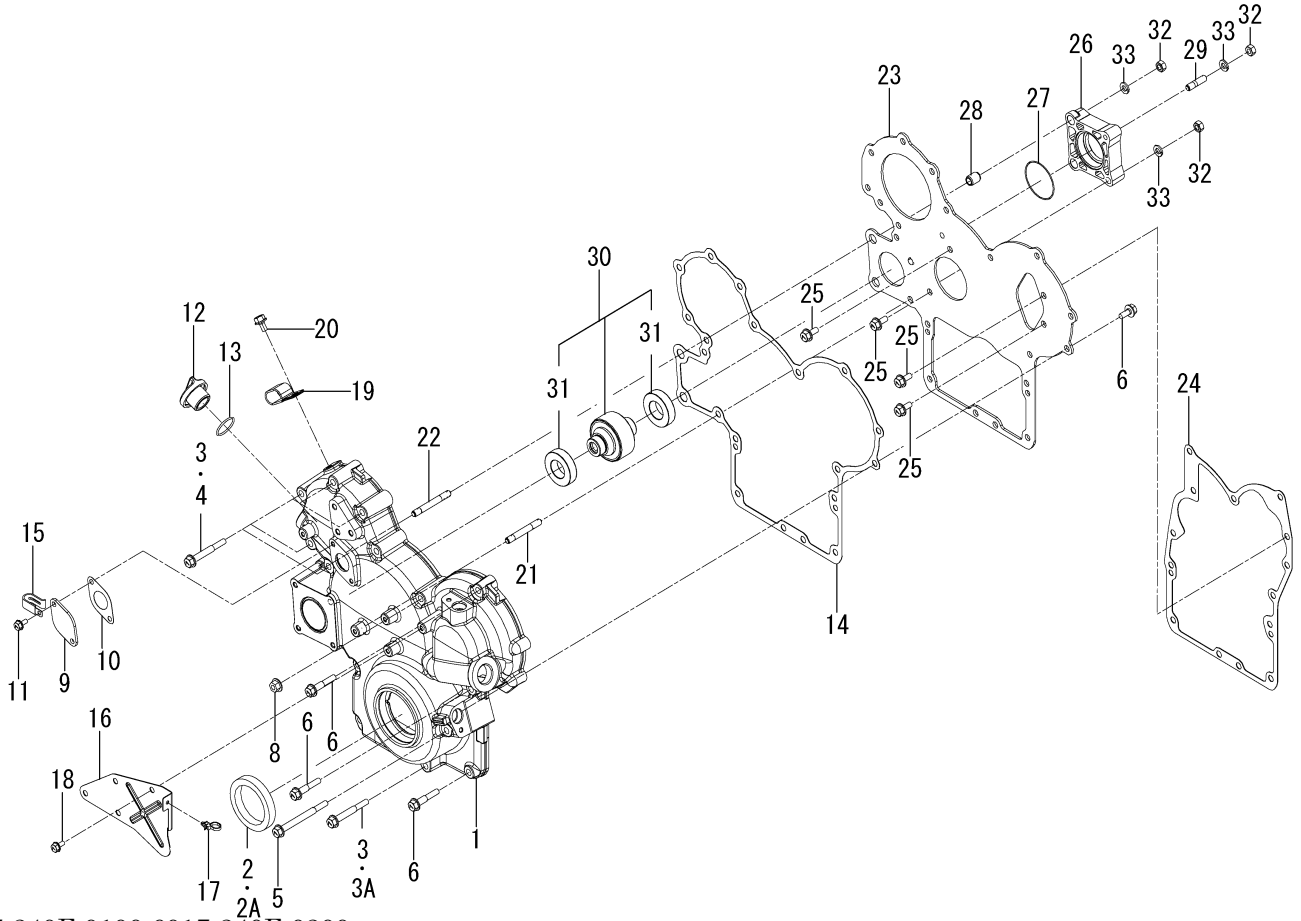


6017-240F-0100,6017-240F-0200

| KEY | PART CODE | DESCRIPTION | SPC | TYPE OF MODEL E3FH TDEG01 | | ITC | COL | GRP | REMARKS |
|---|---|---|---|---|---|---|---|---|---|
| 29 | 6904-110-822-00 | STUD | * | 1 | | | | | |
| 30 | 6212-530-028-00 | SHAFT/HYDRAURIC ASSY | * | 1 | | | | | |
| 31 | V600-110-600-50 | BEARING,RB/6005 | * | 2 | | | | | |
| 32 | V304-260-008-00 | NUT/M8 | * | 4 | | | | | |
| 33 | V401-160-008-00 | WASHER,SP/M8 | * | 4 | | | | | |

# FIG. 13 HANGER

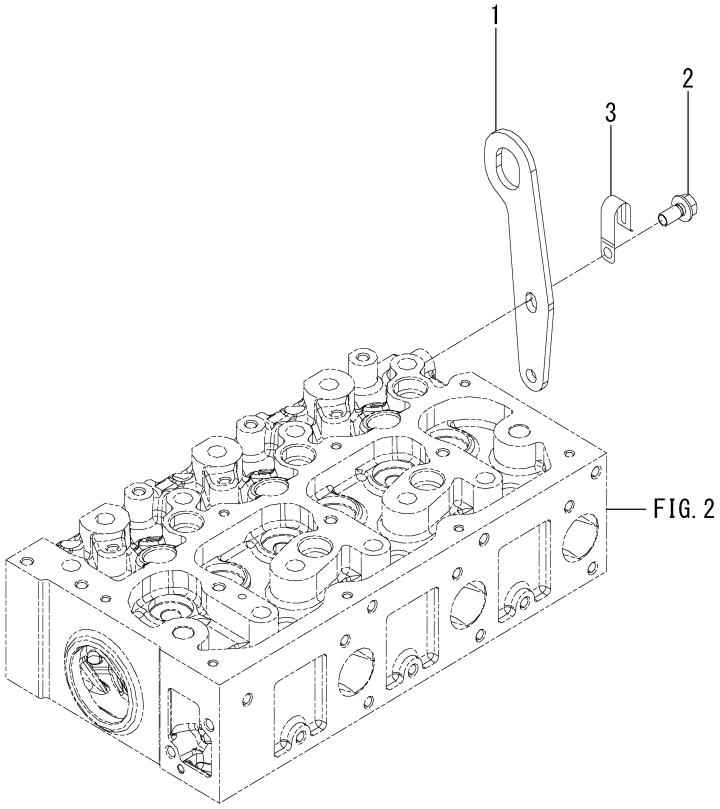


6017-290C-0100

| KEY | PART CODE | DESCRIPTION | SPC | TYPE OF MODEL E3FH TDEG01 | | ITC | COL | GRP | REMARKS |
|---|---|---|---|---|---|---|---|---|---|
| 1 | 6211-777-047-10 | HANGER/REAR | * | 1 | | | | | |
| 2 | V231-360-801-60 | FLANGEBOLT/M8X16 | * | 2 | | | | | |
| 3 | 1425-621-004-00 | HOLDER/JE/9-9 | * | 1 | | | | | |

# FIG. 14 VALVE

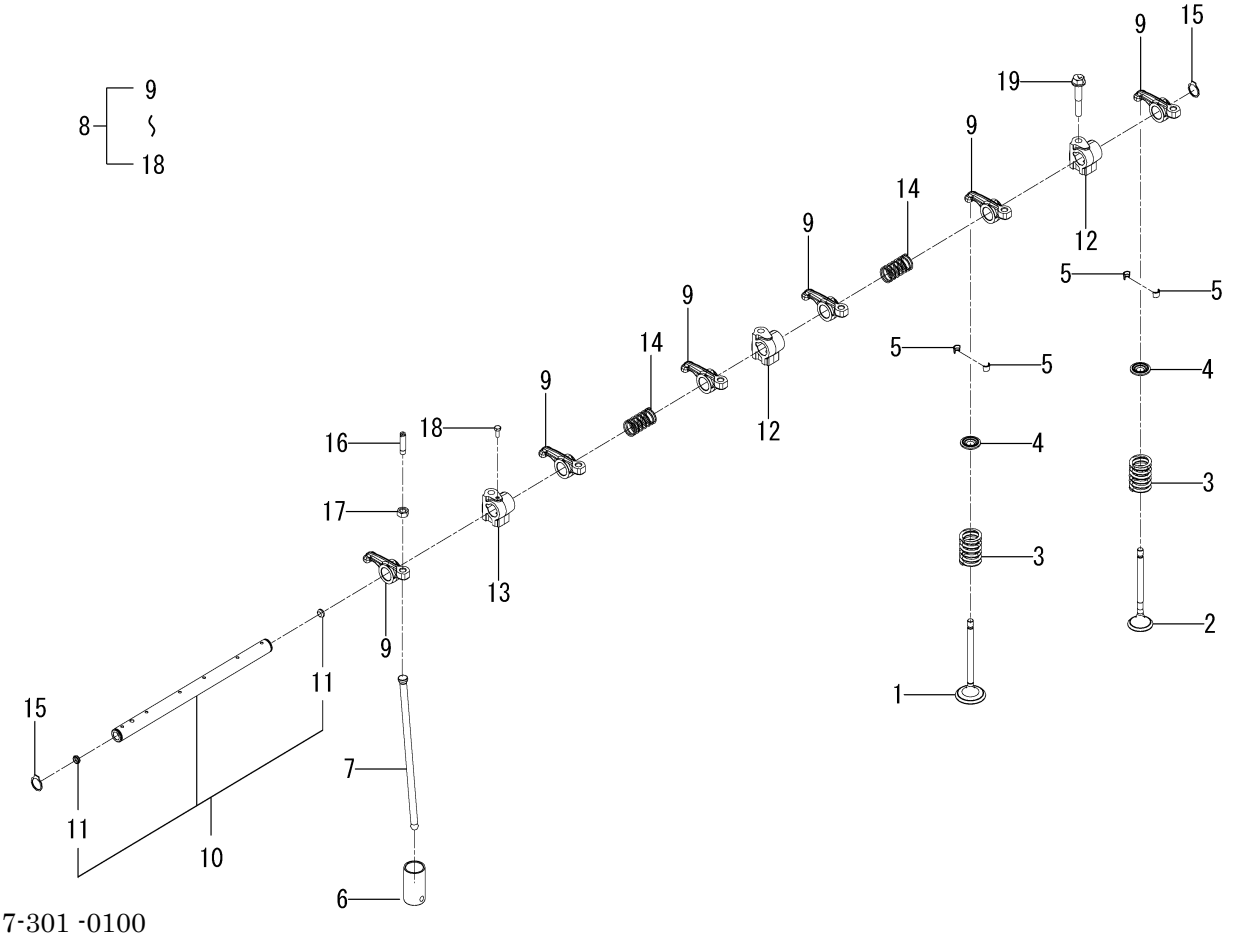


6017-301 -0100

| KEY | PART CODE | DESCRIPTION | SPC | TYPE OF MODEL E3FH TDEG01 | | ITC | COL | GRP | REMARKS |
|---|---|---|---|---|---|---|---|---|---|
| 1 | 6212-551-031-00 | VALVE/INTAKE | * | 3 | | | | | |
| 2 | 6212-552-017-00 | VALVE/EXHAUST | * | 3 | | | | | |
| 3 | 6212-561-003-00 | SPRING/VALVE | * | 6 | | | | | |
| 4 | 6212-563-005-00 | SEAT/VALVESPRING | * | 6 | | | | | |
| 5 | 6212-565-001-00 | CUTTER,VALVE | * | 12 | | | | | |
| 6 | 6212-571-002-30 | TAPPET | * | 6 | | | | | |
| 7 | 6212-575-014-00 | PUSHROD | * | 6 | | | | | |
| 8 | 6212-600-018-00 | ROCKERSHAFT ASSY | * | 1 | | | | | |
| 9 | 6212-611-014-00 | ROCKERARM | * | 6 | | | | | |
| 10 | 6212-620-016-00 | SHAFT/ROCKERARM ASSY | * | 1 | | | | | |
| 11 | 6212-626-003-00 | PLUG | * | 2 | | | | | |
| 12 | 6212-628-020-00 | BRACKET/ROCKERSHAFT | * | 2 | | | | | |
| 13 | 6212-628-021-00 | BRACKET/ROCKERSHAFT | * | 1 | | | | | |
| 14 | 6212-629-006-00 | SPRING | * | 2 | | | | | |
| 15 | 6212-629-007-00 | RING/SNAP | * | 2 | | | | | |
| 16 | 6212-629-008-00 | SCREW/ADJUST | * | 6 | | | | | |
| 17 | 6212-629-009-00 | NUT | * | 6 | | | | | |
| 18 | 6212-629-010-00 | BOLT | * | 1 | | | | | |
| 19 | V231-360-804-50 | FLANGEBOLT/M8X45 | * | 3 | | | | | |

# FIG. 15 CAM SHAFT

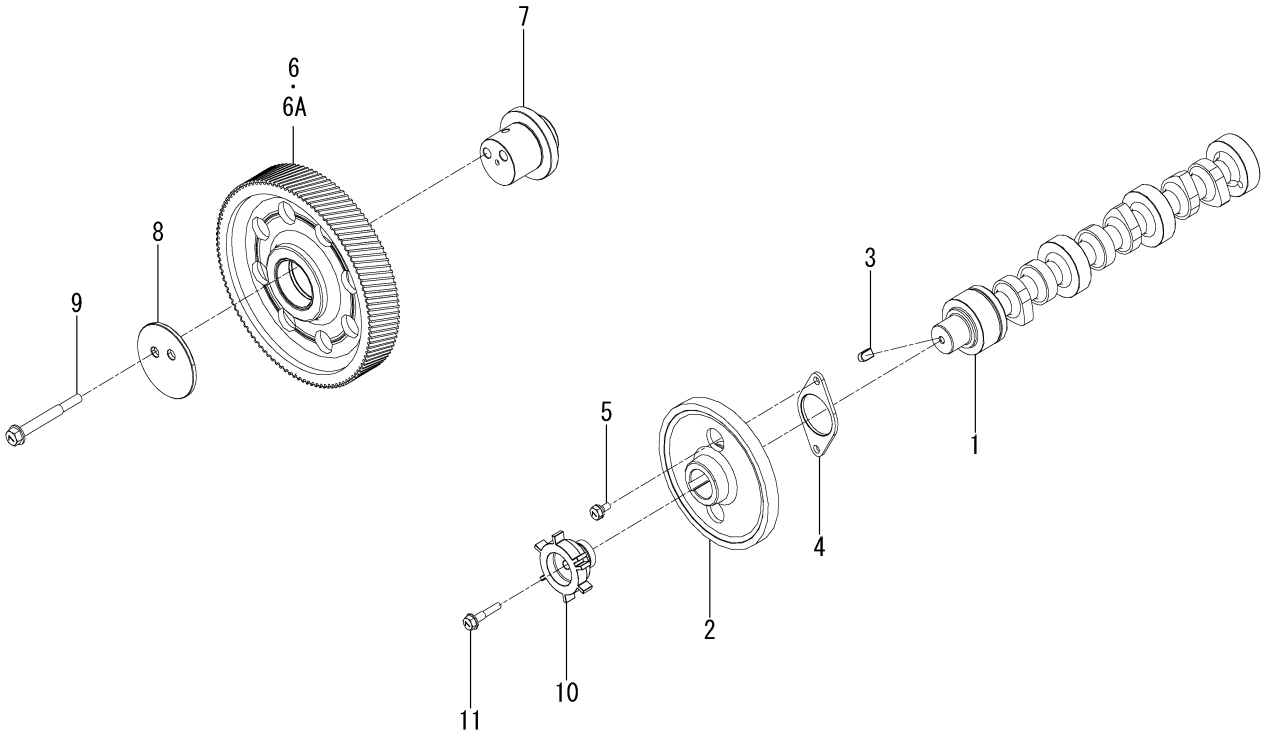


6017-310A-0100

| KEY | PART CODE | DESCRIPTION | SPC | TYPE OF MODEL E3FH TDEG01 | | ITC | COL | GRP | REMARKS |
|---|---|---|---|---|---|---|---|---|---|
| 1 | 6212-511-025-00 | CAMSHAFT | * | 1 | | | | | |
| 2 | 6212-522-016-30 | GEAR/CAMSHAFT | * | 1 | | | | | |
| 3 | 6209-730-005-00 | KEY/07X05X09 | * | 1 | | | | | |
| 4 | 6212-535-007-00 | PLATE/THRUST | * | 1 | | | | | |
| 5 | V210-560-601-20 | BOLT,S/M6X12/7T | * | 2 | | | | | |
| 6 | 6212-523-034-10 | GEAR/IDLE ASSY | * | 1 -17665 | | | | | |
| 6A | 6212-523-034-20 | GEAR/IDLE ASSY | * | 1 17666- | | 1 | | | |
| 7 | 6212-531-016-00 | SHAFT/IDLEGEAR | * | 1 | | | | | |
| 8 | 6212-535-015-00 | PLATE/THRUST/IDLE | * | 1 | | | | | |
| 9 | V231-360-807-00 | FLANGEBOLT/M8X70 | * | 2 | | | | | |
| 10 | 6212-529-015-20 | SENSORWHEEL/CAM | * | 1 | | | | | |
| 11 | V230-360-603-00 | FLANGEBOLT/M6X30 | * | 1 | | | | | |

# FIG. 16 PISTON

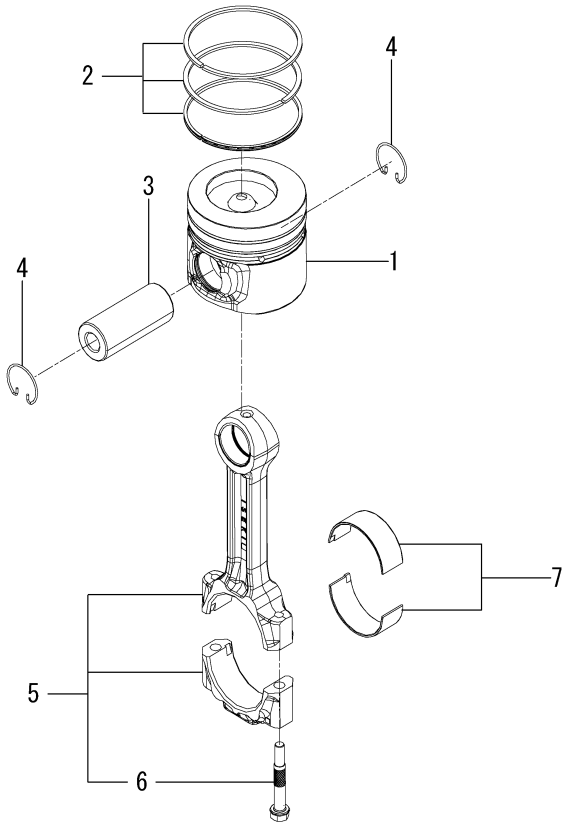


6017-340 -0100

| KEY | PART CODE | DESCRIPTION | SPC | TYPE OF MODEL E3FH TDEG01 | | ITC | COL | GRP | REMARKS |
|---|---|---|---|---|---|---|---|---|---|
| 1 | 6212-111-115-00 | PISTON | * | 3 | | | | | |
| 2 | 6212-121-031-00 | RING/PISTONSET | * | 3 | | | | | |
| 3 | 6212-211-008-00 | PISTONPIN | * | 3 | | | | | |
| 4 | 6209-587-008-00 | SNAPRING | * | 6 | | | | | |
| 5 | 6212-230-018-10 | CONNECTINGROD ASSY | * | 3 | | | | | |
| 6 | 6212-235-008-00 | BOLT/CONNECTINGROD | * | 6 | | | | | |
| 7 | 6212-271-017-00 | BEARING/CONNECTING R | * | 3 | | | | | |

# FIG. 17 PISTON/OVER SIZE (OPTION)

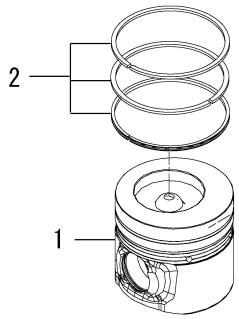


6017-349 -0100

| KEY | PART CODE | DESCRIPTION | SPC | TYPE OF MODEL E3FH TDEG01 | | ITC | COL | GRP | REMARKS |
|---|---|---|---|---|---|---|---|---|---|
| 1 | 6212-115-115-00 | PISTON/OV025 | T | 3 | | | | | |
| 2 | 6212-125-001-00 | RING/PISTON/OV025SET | T | 3 | | | | | |

# FIG. 18 CRANK SHAFT

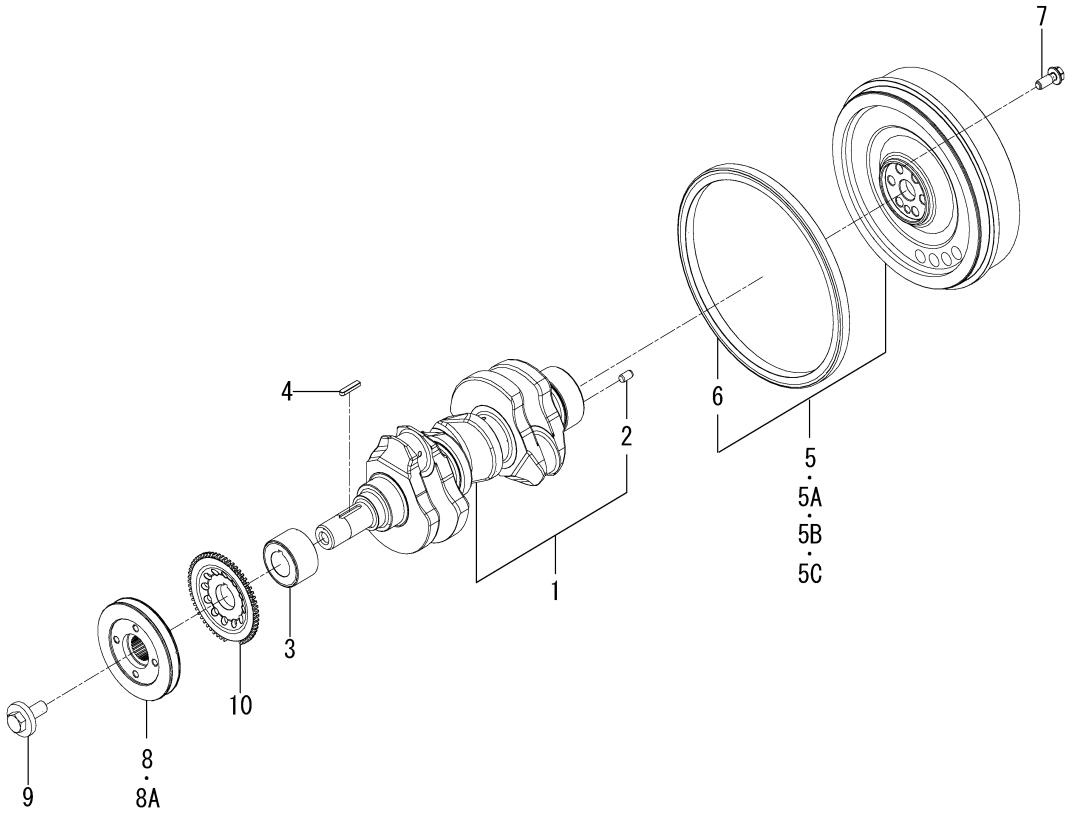


6017-350Q-0100

| KEY | PART CODE | DESCRIPTION | SPC | TYPE OF MODEL E3FH TDEG01 | | ITC | COL | GRP | REMARKS |
|---|---|---|---|---|---|---|---|---|---|
| 1 | 6212-310-056-00 | CRANKSHAFT ASSY | * | 1 | | | | | |
| 2 | V523-101-001-80 | PIN,ST,B/10X18 | * | 1 | | | | | |
| 3 | 6212-521-012-10 | GEAR/CRANKT | * | 1 | | | | | |
| 4 | 6209-730-007-00 | KEY/07X05X33.5 | * | 1 | | | | | |
| 5 | 6212-330-133-10 | FLYWHEEL ASSY | * | 1 -12331 | | 1 | | | |
| 5A | 6212-330-133-20 | FLYWHEEL ASSY | * | 1 -12378 | | 1 | | | |
| 5B | 6212-330-133-30 | FLYWHEEL ASSY | * | 1 -16047 | | 1 | | | |
| 5C | 6212-330-133-40 | FLYWHEEL ASSY | * | 1 16048- | | 1 | | | |
| 6 | 6212-333-002-10 | RINGGEAR | * | 1 | | | | | |
| 7 | 6209-046-015-00 | BOLT/FLANGE | * | 6 | | | | | |
| 8 | 6212-371-089-10 | PULLEY/CRANK | * | 1 -11700 | | | | | |
| 8A | 6212-371-089-20 | PULLEY/CRANK | * | 1 11701- | | 1 | | | |
| 9 | 6209-000-046-00 | BOLT/CRANK | * | 1 | | | | | |
| 10 | 6212-529-012-00 | SENSORWHEEL/CRANK | * | 1 | | | | | |

# FIG. 19 OIL PUMP

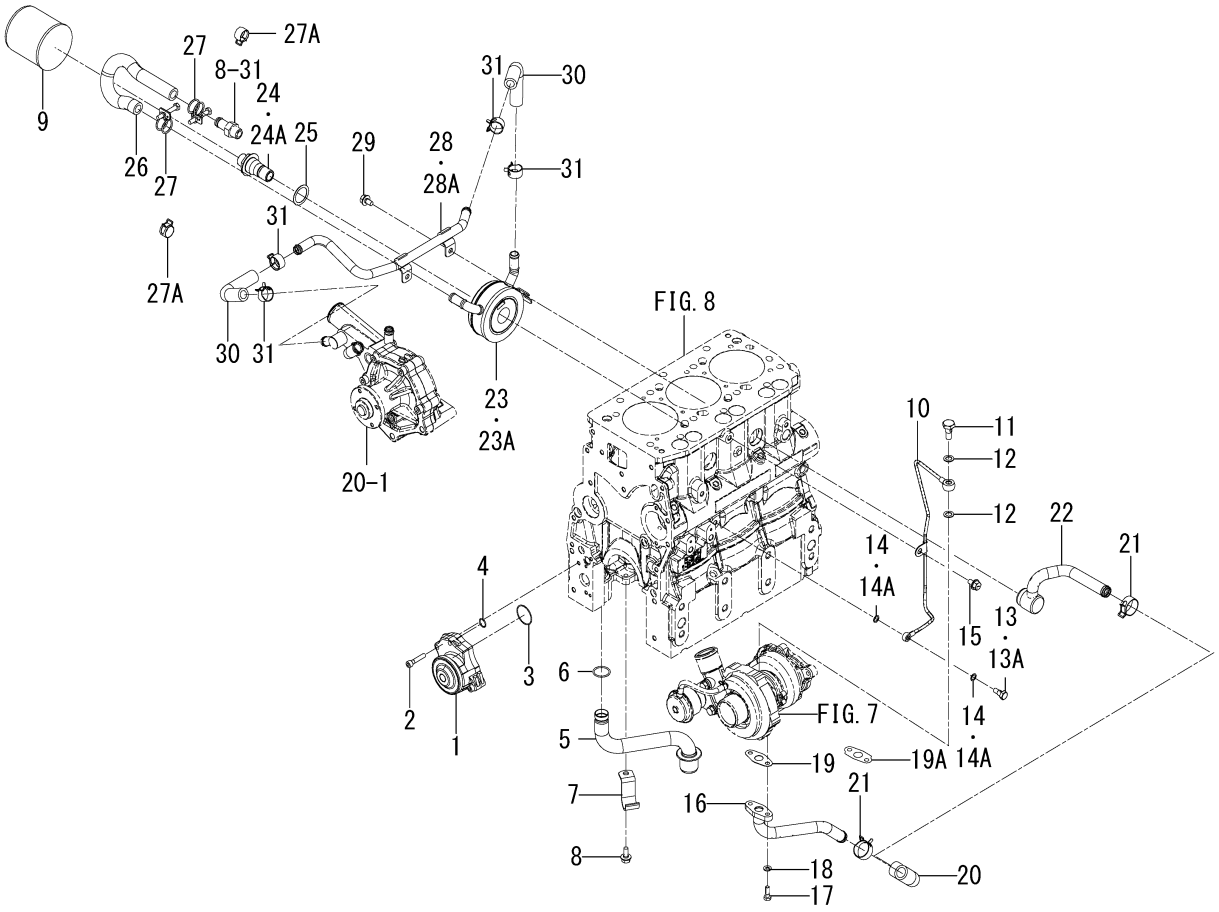


6017-401B-0100

| KEY | PART CODE | DESCRIPTION | SPC | TYPE OF MODEL E3FH TDEG01 | | ITC | COL | GRP | REMARKS |
|---|---|---|---|---|---|---|---|---|---|
| 1 | 6213-100-013-00 | OILPUMP ASSY | * | 1 | | | | | |
| 2 | V220-540-603-00 | SCREW,SOCKET/M6X30 | * | 3 | | | | | |
| 3 | V723-102-003-00 | O-RING/1A,S30 | * | 1 | | | | | |
| 4 | V720-102-401-10 | O-RING/1A,P11 | * | 1 | | | | | |
| 5 | 6213-140-041-00 | STRAINER | * | 1 | | | | | |
| 6 | V720-102-401-80 | O-RING/1A,P18 | * | 1 | | | | | |
| 7 | 6213-149-003-30 | CLAMP/STRAINER | * | 1 | | | | | |
| 8 | V231-360-801-60 | FLANGEBOLT/M8X16 | * | 1 | | | | | |
| 9 | 6213-240-005-10 | CARTRIDGE/OILFILTER | * | 1 | | | | | |
| 10 | 6213-311-095-00 | PIPE/OIL ASSY | * | 1 | | | | | |
| 11 | 6209-060-006-00 | EYEBOLT | * | 1 | | | | | |
| 12 | 6209-920-003-00 | GASKET | * | 2 | | | | | |
| 13 | 6209-060-005-00 | EYEBOLT | * | 1 -18100 | | | | | |
| 13A | 6209-060-005-10 | EYEBOLT | * | 1 18101- | | 1 | | | |
| 14 | 6209-920-002-00 | PACKING | * | 2 -13616 | | | | | |
| 14A | 6215-619-028-00 | WASHER/PLATE/COPPER | * | 2 13617- | | | | | |
| 15 | V231-360-801-20 | FLANGEBOLT/M8X12 | * | 1 | | | | | |
| 16 | 6213-311-090-10 | PIPE/OIL COMP | * | 1 | | | | | |
| 17 | 6209-030-094-00 | BOLT | * | 2 | | | | | |
| 18 | V401-160-006-00 | WASHER,SP/M6 | * | 2 | | | | | |
| 19 | 6209-630-004-20 | GASKET | * | 1 -41527 | | | | | |
| 19A | 6209-630-004-30 | GASKET | * | 1 41528- | | 1 | | | |
| 20 | 6209-360-176-10 | HOSE/RUBBER | * | 1 | | | | | |
| 21 | 1841-107-006-00 | CLIP/HOSE/23.4-25.4 | * | 2 | | | | | |
| 22 | 6213-311-089-20 | PIPE/OIL/BLOCK COMP | * | 1 | | | | | |
| 23 | 6221-700-004-00 | OILCOOLER | * | 1 -42598 | | | | | |
| 23A | 6221-700-004-10 | OILCOOLER ASSY | * | 1 42599- | | 1 | | | |
| 24 | 6221-726-013-00 | CONNECTOR/OILCOOLER | * | 1 -17014 | | | | | |
| 24A | 6221-726-013-10 | CONNECTOR/OILCOOLER | * | 1 17015- | | 1 | | | |
| 25 | 6221-726-008-00 | WASHER/OILCOOLER | * | 1 | | | | | |

# FIG. 19 OIL PUMP

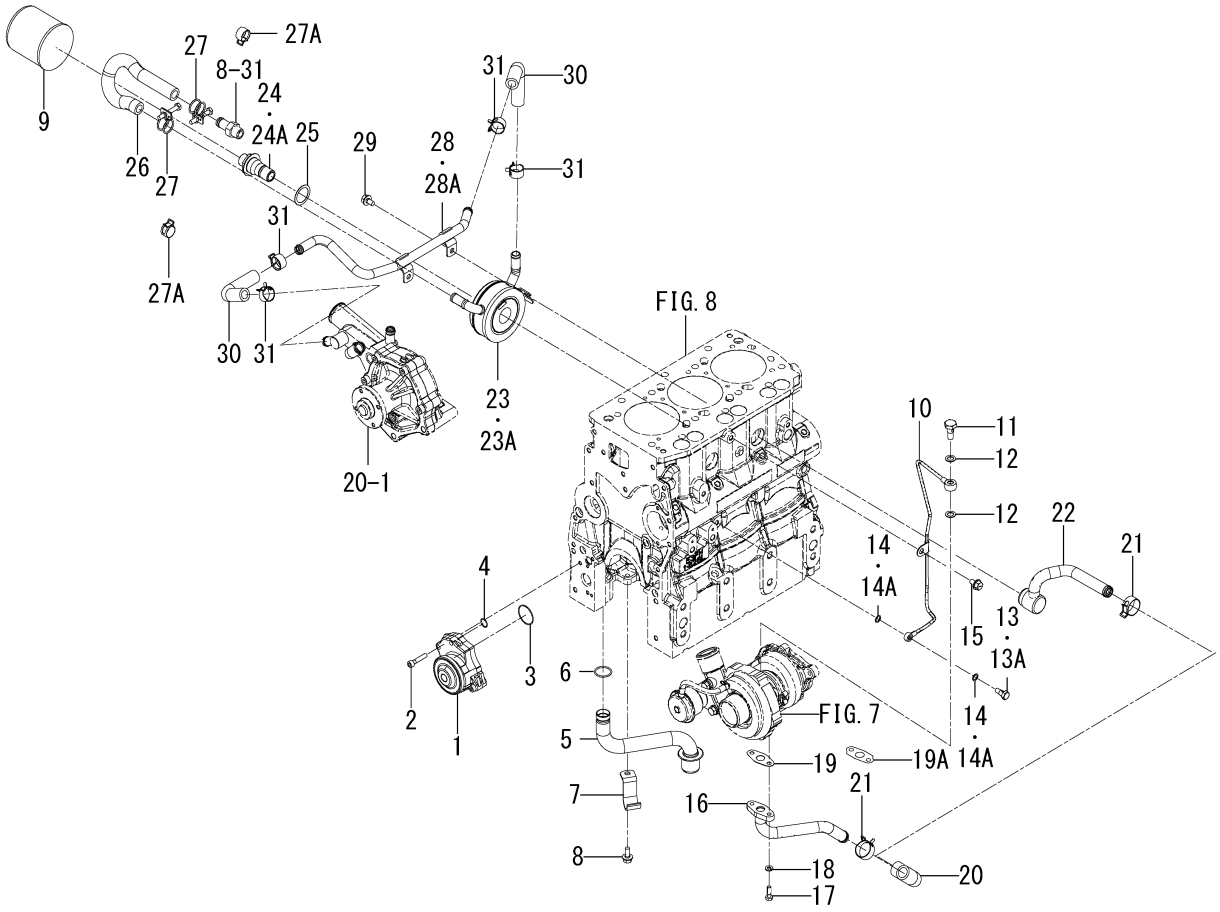


6017-401B-0100

| KEY | PART CODE | DESCRIPTION | SPC | TYPE OF MODEL E3FH TDEG01 | | ITC | COL | GRP | REMARKS |
|---|---|---|---|---|---|---|---|---|---|
| 26 | 6209-360-071-10 | HOSE/OILCOOLER/IN | * | 1 | | | | | |
| 27 | J061-216-020-00 | CLAMP/WIRE/16-20 | * | 2 -30444 | | | | | |
| 27A | 1650-780-011-10 | CLIP/HOSE/18-22 | * | 2 30445- | | | | | |
| 28 | 6213-721-051-10 | PIPE/OILCOOLER COMP | * | 1 -15198 | | | | | |
| 28A | 6213-721-051-20 | PIPE/OILCOOLER COMP | * | 1 15199- | | 1 | | | |
| 29 | V231-360-801-20 | FLANGEBOLT/M8X12 | * | 2 | | | | | |
| 30 | 6209-360-205-00 | HOSE/RUBBER | * | 2 | | | | | |
| 31 | 1650-780-011-10 | CLIP/HOSE/18-22 | * | 4 | | | | | |

# FIG. 20 WATER PUMP

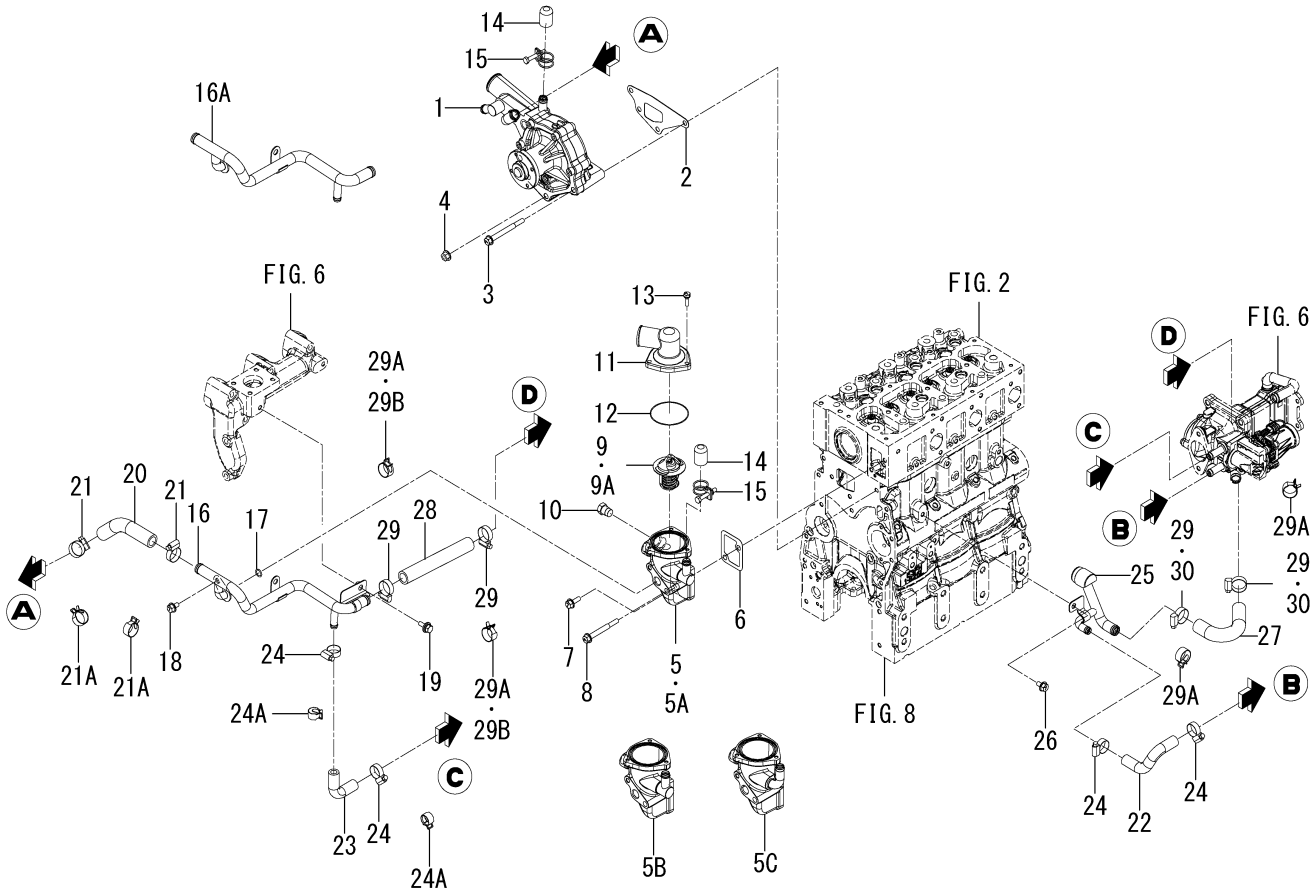


6016-420C-0100,6016-420C-0200

| KEY | PART CODE | DESCRIPTION | SPC | TYPE OF MODEL E3FH TDEG01 | | ITC | COL | GRP | REMARKS |
|---|---|---|---|---|---|---|---|---|---|
| 1 | 6213-610-017-20 | WATERPUMP ASSY | * | 1 | | | | | |
| 2 | 6213-613-010-00 | GASKET/SPACER | * | 1 | | | | | |
| 3 | V231-360-808-00 | FLANGEBOLT/M8X80 | * | 3 | | | | | |
| 4 | 3817-401-001-00 | NUT/M08 | * | 1 | | | | | |
| 5 | 6213-716-024-10 | HOUSING/THERMOSTAT | * | 1 -13419 | | | | | |
| 5A | 6213-716-024-20 | HOUSING/THERMOSTAT | * | 1 -26330 | | 1 | | | |
| 5B | 6213-716-024-30 | HOUSING/THERMOSTAT | * | 1 -39977 | | 1 | | | |
| 5C | 6213-716-024-40 | HOUSING/THERMOSTAT | * | 1 39978- | | 1 | | | |
| 6 | 6213-743-006-00 | GASKET/HOUSING | * | 1 | | | | | |
| 7 | V231-360-802-00 | FLANGEBOLT/M8X20 | * | 1 | | | | | |
| 8 | V231-360-807-00 | FLANGEBOLT/M8X70 | * | 1 | | | | | |
| 9 | 6213-770-004-00 | THERMOSTAT | * | 1 -15793 | | | | | |
| 9A | 6213-770-004-10 | THERMOSTAT | * | 1 15794- | | 1 | | | |
| 10 | 6213-719-007-00 | PLUG/M16X1.5 | * | 1 -13431 | | | | | |
| 11 | 6213-711-019-00 | PIPE/WATEROUTLET | * | 1 | | | | | |
| 12 | 6213-741-001-00 | GASKET/THERMOSTAT | * | 1 | | | | | |
| 13 | V210-560-602-00 | BOLT,S/M6X20/7T | * | 3 | | | | | |
| 14 | 6213-729-011-00 | CAP | * | 2 | | | | | |
| 15 | 3801-311-011-00 | CLAMP/WIRE/18-22 | * | 2 | | | | | |
| 16 | 6213-721-044-10 | PIPE/EGR/OUT COMP | * | 1 -43537 | | | | | |
| 16A | 6213-721-044-20 | PIPE/EGR/OUT COMP | * | 1 43538- | | 1 | | | |
| 17 | 6213-729-044-00 | RING/O/EGRPIPE | * | 1 | | | | | |
| 18 | V231-360-801-20 | FLANGEBOLT/M8X12 | * | 1 | | | | | |
| 19 | 2186-738-059-00 | BOLT/M8X20/SP/S | * | 1 -43544 | | | | | |
| 20 | 6209-360-202-00 | HOSE/RETURN | * | 1 | | | | | |
| 21 | J061-116-025-00 | CLAMP/WORM/16-25 | * | 2 -18656 | | | | | |
| 21A | 1841-107-006-00 | CLIP/HOSE/23.4-25.4 | * | 2 18657- | | | | | |
| 22 | 6209-360-178-10 | HOSE/EGRVALVE/IN | * | 1 | | | | | |
| 23 | 6209-360-179-00 | HOSE/EGRVALVE/OUT | * | 1 | | | | | |
| 24 | J061-112-020-00 | CLAMP/WORM/12-20 | * | 4 -18656 | | | | | |

# FIG. 20 WATER PUMP

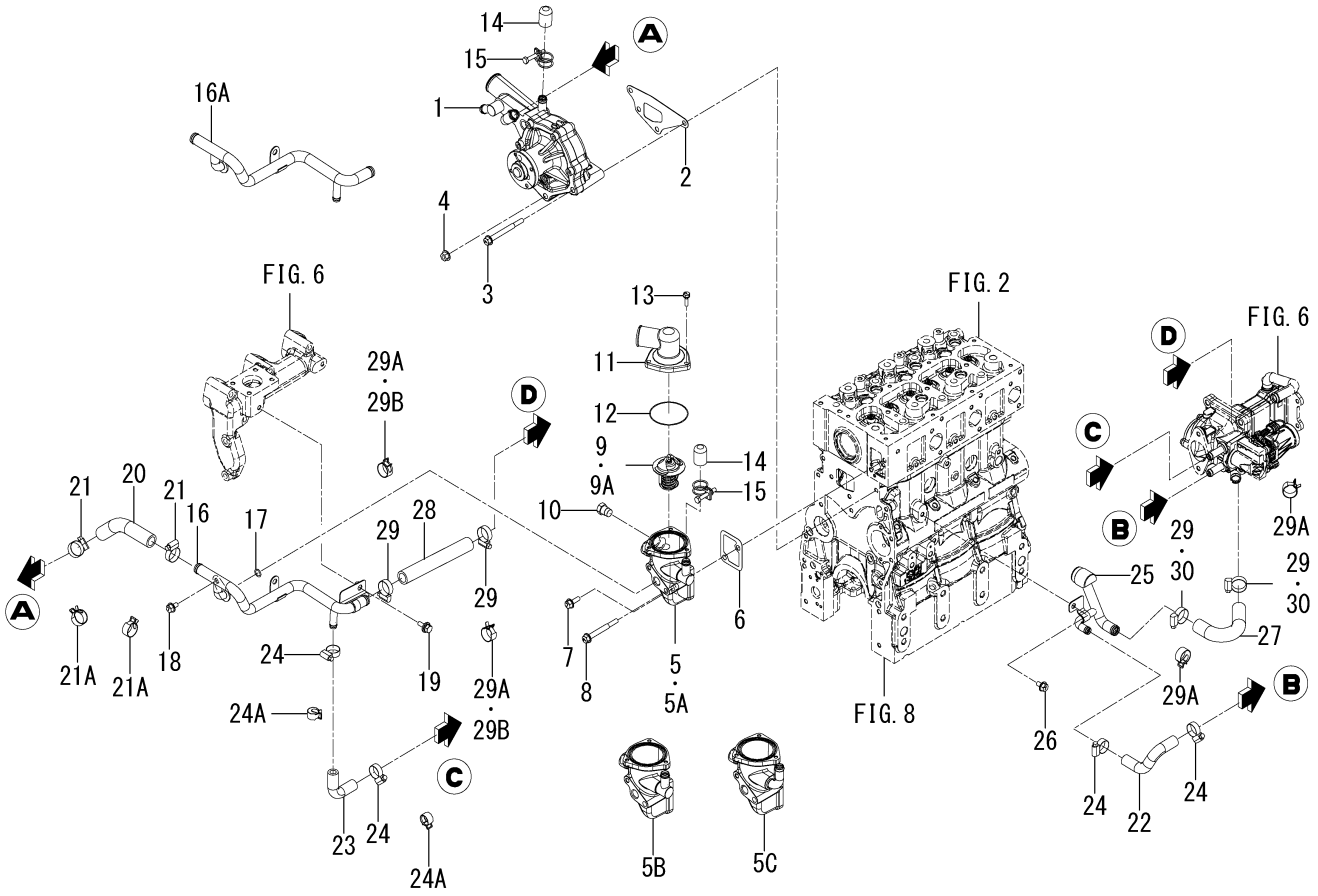


6016-420C-0100,6016-420C-0200

| KEY | PART CODE | DESCRIPTION | SPC | TYPE OF MODEL E3FH TDEG01 | | ITC | COL | GRP | REMARKS |
|---|---|---|---|---|---|---|---|---|---|
| 24A | 1650-780-011-10 | CLIP/HOSE/18-22 | * | 4 18657- | | | | | |
| 25 | 6213-721-039-20 | PIPE/EGR/IN COMP | * | 1 | | | | | |
| 26 | V231-360-801-20 | FLANGEBOLT/M8X12 | * | 1 | | | | | |
| 27 | 6209-360-180-10 | HOSE/COOLER/IN | * | 1 | | | | | |
| 28 | 6209-360-181-00 | HOSE/COOLER/OUT | * | 1 | | | | | |
| 29 | J061-116-025-00 | CLAMP/WORM/16-25 | * | 4 -18656 | | | | | |
| 29A | 1841-107-006-00 | CLIP/HOSE/23.4-25.4 | * | 4 -37966 | | | | | |
| 29B | 1841-107-006-00 | CLIP/HOSE/23.4-25.4 | * | 2 37967- | | | | | |
| 30 | J061-116-025-00 | CLAMP/WORM/16-25 | * | 2 37967- | | | | | |

# FIG. 21 COOLING FAN

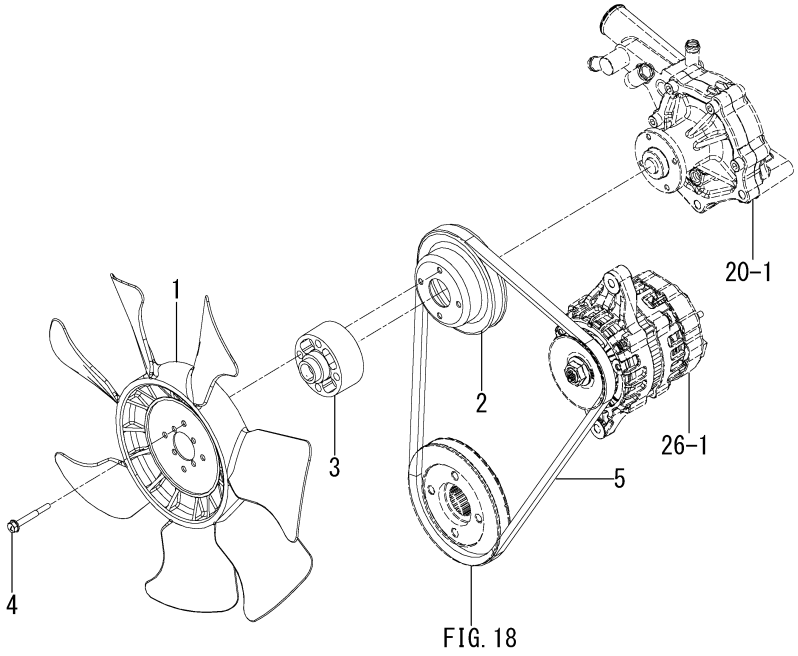


FIG. 18

6017-480E-0100

| KEY | PART CODE | DESCRIPTION | SPC | TYPE OF MODEL E3FH TDEG01 | | ITC | COL | GRP | REMARKS |
|---|---|---|---|---|---|---|---|---|---|
| 1 | 6213-660-003-10 | FAN/COOLING | * | 1 | | | | | |
| 2 | 6213-641-007-20 | PULLEY/WATERPUMP | * | 1 | | | | | |
| 3 | 6213-669-013-00 | SPACER/FAN | * | 1 | | | | | |
| 4 | V230-360-605-00 | FLANGEBOLT/M6X50 | * | 4 | | | | | |
| 5 | 6213-671-062-00 | BELT/VNR5A43.0 | * | 1 | | | | | |

# FIG. 22 INJECTION NOZZLE

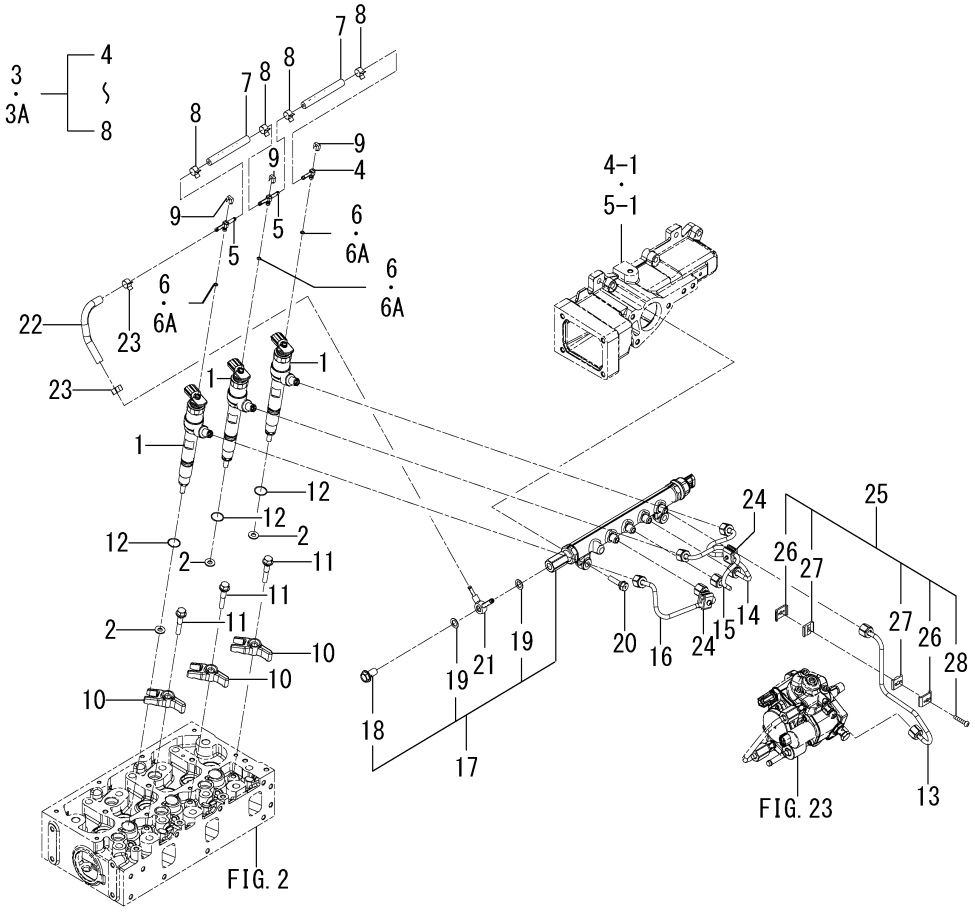


6017-501A-0100

| KEY | PART CODE | DESCRIPTION | SPC | TYPE OF MODEL E3FH TDEG01 | | ITC | COL | GRP | REMARKS |
|---|---|---|---|---|---|---|---|---|---|
| 1 | 6215-300-066-10 | INJECTIONNOZZLE ASSY | * | 3 | | | | | |
| 2 | 6215-315-001-10 | GASKET | * | 3 | | | | | |
| 3 | 6215-419-044-00 | BACKLEAKRAIL ASSY | * | 1 -31758 | | | | | |
| 3A | 6215-419-044-10 | BACKLEAKRAIL ASSY | * | 1 31759- | | 1 | | | |
| 4 | 6215-419-042-00 | CONNECTOR/L | * | 1 | | | | | |
| 5 | 6215-419-043-00 | CONNECTOR/T | * | 2 | | | | | |
| 6 | 6215-419-061-00 | RING/O | * | 3 -33637 | | | | | |
| 6A | 6215-419-061-10 | RING/O | * | 3 33638- | | 1 | | | |
| 7 | 6215-419-039-00 | HOSE | * | 2 | | | | | |
| 8 | J062-104-111-00 | CLIP/HOSE/10.4-11.1 | * | 4 | | | | | |
| 9 | 6215-419-060-00 | CLIP | * | 3 | | | | | |
| 10 | 6215-337-038-10 | CLAMP/NOZZLEHOLDER | * | 3 | | | | | |
| 11 | 6209-046-067-10 | FLANGEBOLT | * | 3 | | | | | |
| 12 | 6215-315-010-00 | RING/O/INJECTOR | * | 3 | | | | | |
| 13 | 6215-411-208-10 | PIPE/INJECTION ASSY | * | 1 | | | | | |
| 14 | 6215-411-209-10 | PIPE/INJECTION ASSY | * | 1 | | | | | |
| 15 | 6215-411-210-10 | PIPE/INJECTION ASSY | * | 1 | | | | | |
| 16 | 6215-411-211-10 | PIPE/INJECTION ASSY | * | 1 | | | | | |
| 17 | 6215-401-008-00 | RAIL ASSY | * | 1 | | | | | |
| 18 | 6215-619-097-00 | SCREW/HOLOW/RAIL | * | 1 | | | | | |
| 19 | 6215-619-099-00 | WASHER | * | 2 | | | | | |
| 20 | V231-360-803-00 | FLANGEBOLT/M8X30 | * | 2 | | | | | |
| 21 | 6215-412-028-00 | PIPE/L COMP | * | 1 | | | | | |
| 22 | 6215-419-062-00 | HOSE/LEAK | * | 1 | | | | | |
| 23 | J062-104-111-00 | CLIP/HOSE/10.4-11.1 | * | 2 | | | | | |
| 24 | 6215-419-014-00 | CLIP ASSY | * | 2 | | | | | |
| 25 | 6215-419-053-10 | CLIP ASSY | * | 1 | | 1 | | | |
| 26 | 6215-419-064-00 | CLIP/A | * | 2 | | | | | |
| 27 | 6215-419-065-00 | RUBBER/CLIP | * | 2 | | | | | |
| 28 | 6209-140-003-00 | SCREW/S | * | 1 | | | | | |

# FIG. 23 INJECTION PUMP

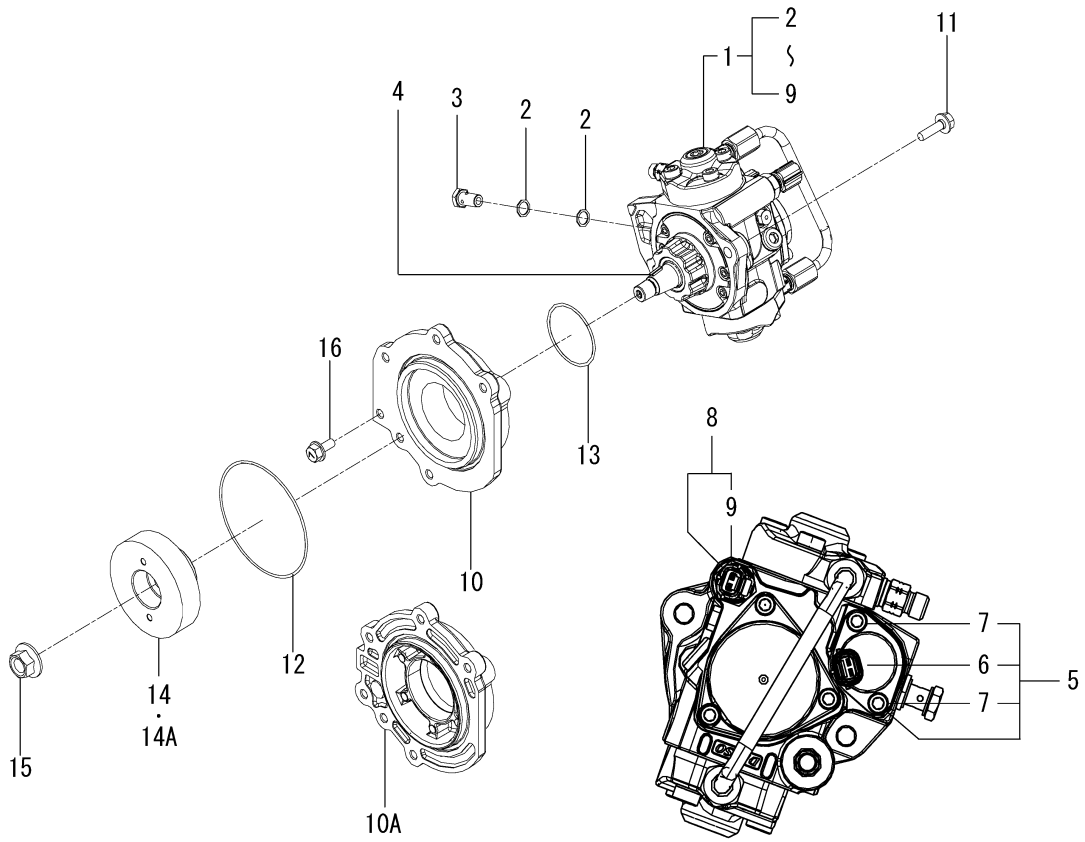


6017-510 -0100

| KEY | PART CODE | DESCRIPTION | SPC | TYPE OF MODEL E3FH TDEG01 | | ITC | COL | GRP | REMARKS |
|---|---|---|---|---|---|---|---|---|---|
| 1 | 6215-600-188-10 | INJECTIONPUMP ASSY | * | 1 | | | | | |
| 2 | 6215-619-100-00 | WASHER | * | 2 | | | | | |
| 3 | 6215-619-098-00 | SCREW/HOLOW/PUMP | * | 1 | | | | | |
| 4 | 6215-781-008-00 | KEY | * | 1 | | | | | |
| 5 | 6215-619-101-00 | SUCTION CONTROL VALV | * | 1 | | | | | |
| 6 | 6215-619-103-00 | RING/O/SUCTION CONTR | * | 1 | | | | | |
| 7 | 6215-619-104-00 | BOLT/SUCTION CONTROL | * | 2 | | | | | |
| 8 | 6215-619-105-00 | SENSOR/FUEL TEMPERAT | * | 1 | | | | | |
| 9 | 6215-619-107-00 | RING/O/SENSOR/FUEL T | * | 1 | | | | | |
| 10 | 6219-751-010-10 | FLANGE/SUPPLYPUMP | * | 1 -34591 | | | | | |
| 10A | 6219-751-014-00 | FLANGE/SUPPLYPUMP | * | 1 34592- | | | | | |
| 11 | V231-360-802-50 | FLANGEBOLT/M8X25 | * | 2 | | | | | |
| 12 | V721-103-109-50 | O-RING/1A,G95 | * | 1 | | | | | |
| 13 | 6219-751-011-00 | RING/O/SUPPLYPUMP | * | 1 | | | | | |
| 14 | 6212-524-028-10 | GEAR/HPP | * | 1 -19041 | | | | | |
| 14A | 6212-524-028-20 | GEAR/HPP | * | 1 19042- | | 1 | | | |
| 15 | 6215-789-006-00 | DRIVESHAFTNUT | * | 1 | | | | | |
| 16 | V231-360-801-60 | FLANGEBOLT/M8X16 | * | 1 | | | | | |

# FIG. 24 FUEL FILTER

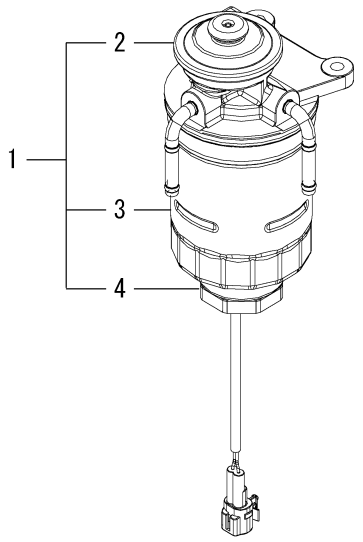


6016-530 -0100

| KEY | PART CODE | DESCRIPTION | SPC | TYPE OF MODEL E3FH TDEG01 | | ITC | COL | GRP | REMARKS |
|---|---|---|---|---|---|---|---|---|---|
| 1 | 6213-200-020-00 | FILTER/FUEL ASSY | * | 1 | | | | | |
| 2 | 6213-212-004-00 | CAP/FUEL COMP | * | 1 | | | | | |
| 3 | 6213-240-012-00 | ELEMENT/FUEL ASSY | * | 1 | | | | | |
| 4 | 6213-219-001-00 | SWITCH/FILTER/FUEL | * | 1 | | | | | |

# FIG. 25 FUEL PIPE

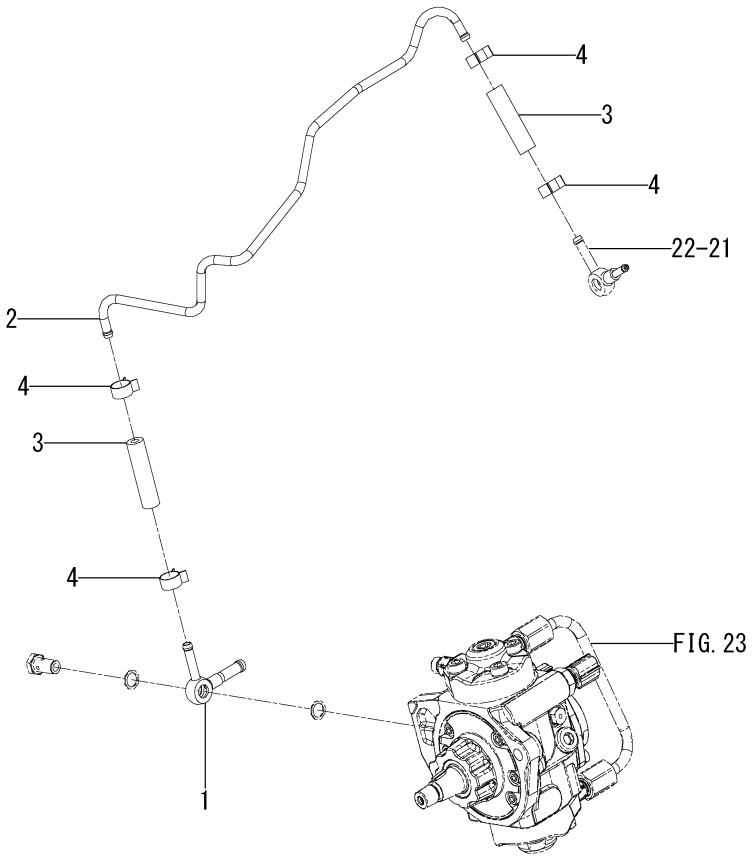


6016-550 -0100

| KEY | PART CODE | DESCRIPTION | SPC | TYPE OF MODEL E3FH TDEG01 | | ITC | COL | GRP | REMARKS |
|---|---|---|---|---|---|---|---|---|---|
| 1 | 6215-412-031-00 | PIPE/L COMP | * | 1 | | | | | |
| 2 | 6215-419-049-20 | PIPE/FUEL | * | 1 | | | | | |
| 3 | 6215-419-063-10 | HOSE | * | 2 | | | | | |
| 4 | J062-126-134-00 | CLIP/HOSE/12.6-13.4 | * | 4 | | | | | |

# FIG. 26 ELECTRIC (1)

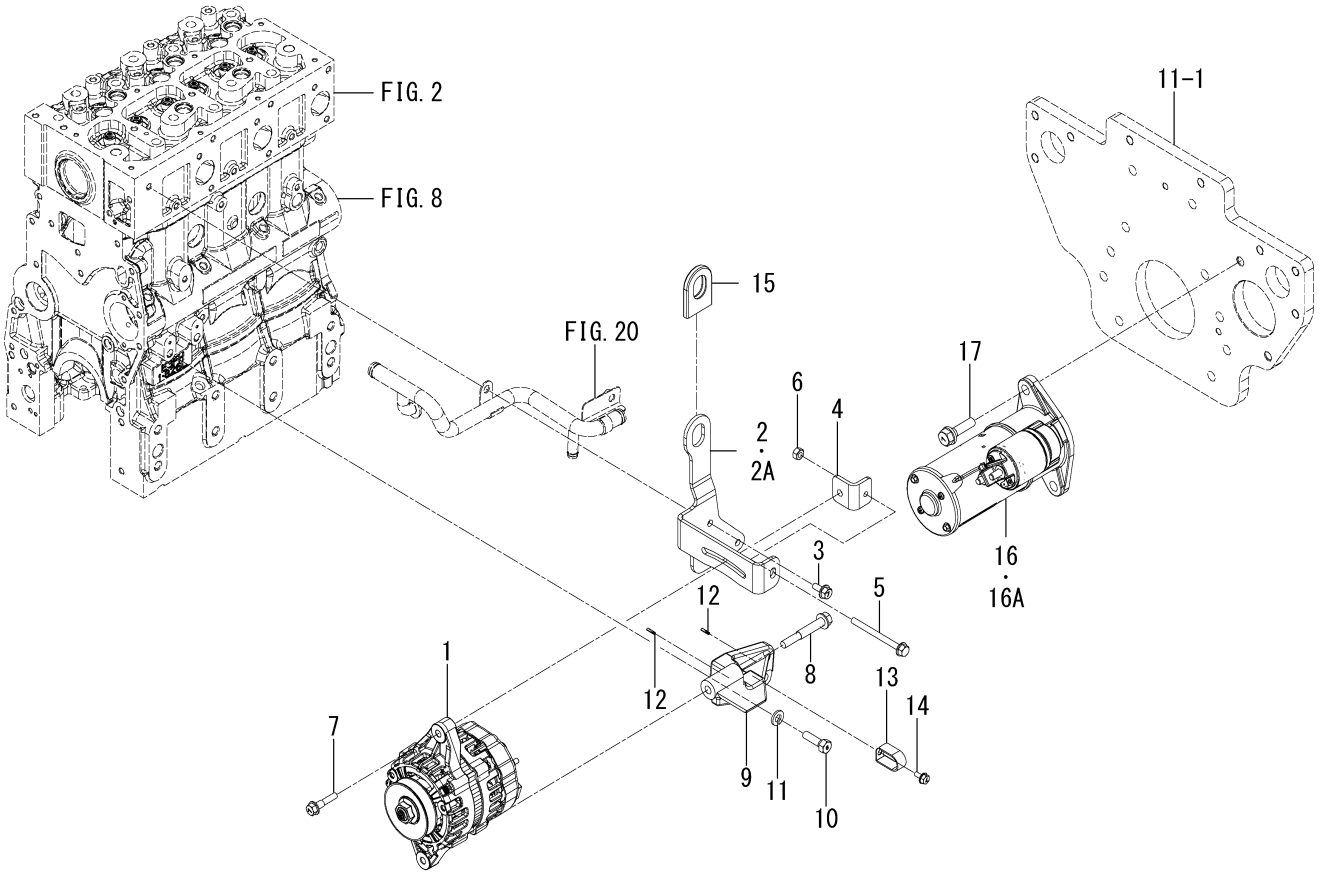


6017-801A-0100,6017-801A-0200

| KEY | PART CODE | DESCRIPTION | SPC | TYPE OF MODEL E3FH TDEG01 | | ITC | COL | GRP | REMARKS |
|---|---|---|---|---|---|---|---|---|---|
| 1 | 6281-200-043-10 | GENERATOR ASSY | * | 1 | | | | | |
| 2 | 6213-674-061-10 | PLATE/ADJUST | * | 1 -10733 | | | | | |
| 2A | 6213-674-061-20 | PLATE/ADJUST | * | 1 10734- | | 1 | | | |
| 3 | V231-360-801-60 | FLANGEBOLT/M8X16 | * | 2 | | | | | |
| 4 | 6213-676-032-00 | PLATE/GENERATOR COMP | * | 1 | | | | | |
| 5 | 6209-046-066-00 | BOLT/FLANGE | * | 1 | | | | | |
| 6 | V304-260-008-00 | NUT/M8 | * | 1 | | | | | |
| 7 | V231-360-803-50 | FLANGEBOLT/M8X35 | * | 1 | | | | | |
| 8 | V233-361-006-50 | FLANGEBOLT | * | 1 | | | | | |
| 9 | 6219-711-009-10 | BRACKET/GENERATOR | * | 1 | | | | | |
| 10 | V203-461-003-00 | BOLT/M10X30/9T,P1.25 | * | 2 | | | | | |
| 11 | V401-160-010-00 | WASHER,SP/M10 | * | 2 | | | | | |
| 12 | V580-140-301-20 | PIN,SPRING/3X12 W | * | 2 | | | | | |
| 13 | 3737-172-009-00 | CLAMP,MAIN HARNESS | * | 1 | | | | | |
| 14 | V230-360-601-20 | FLANGEBOLT/M6X12 | * | 1 | | | | | |
| 15 | 6219-759-002-00 | CAP/HANGER | * | 1 | | | | | |
| 16 | 6281-100-026-10 | STARTER ASSY | * | 1 -17768 | | | | | |
| 16A | 6281-100-026-20 | STARTER ASSY | * | 1 17769- | | 1 | | | |
| 17 | 6281-111-012-00 | SOLENOID/STARTER | * | 1 | | | | | |
| 18 | 6901-931-240-00 | BOLT,SEMS/M12X40/7T | * | 2 | | | | | |

# FIG. 27 ELECTRIC (2)

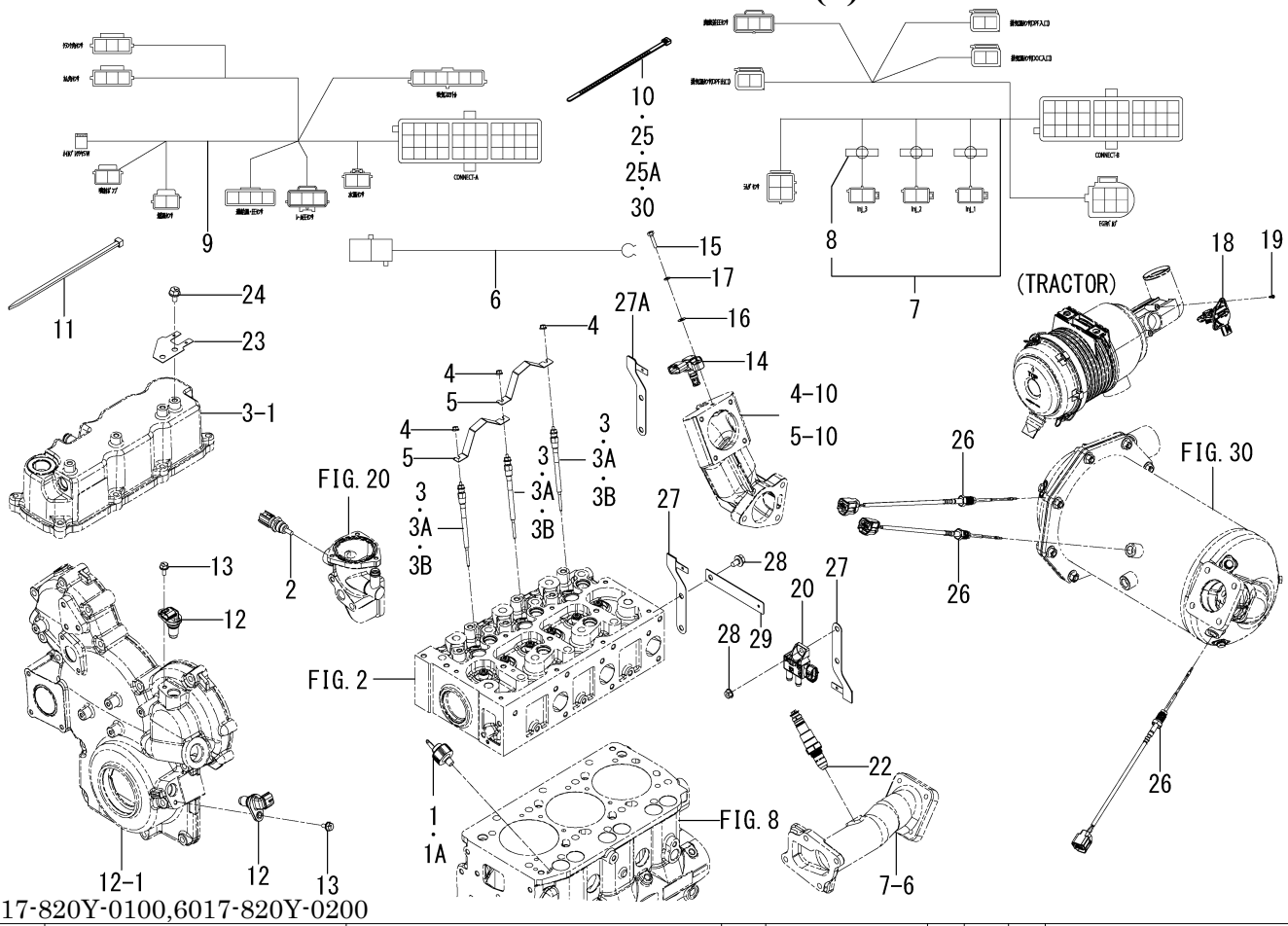


6017-820Y-0100,6017-820Y-0200

| KEY | PART CODE | DESCRIPTION | SPC | TYPE OF MODEL E3FH TDEG01 | | ITC | COL | GRP | REMARKS |
|---|---|---|---|---|---|---|---|---|---|
| 1 | 6281-971-006-00 | SWITCH/OILPRESSURE | * | 1 -33565 | | | | | |
| 1A | 6281-971-006-10 | SWITCH/OILPRESSURE | * | 1 33566- | | 1 | | | |
| 2 | 6282-450-007-00 | THERMOMETER | * | 1 | | | | | |
| 3 | 6281-410-028-00 | GLOWPLUG | * | 3 -24917 | | | | | |
| 3A | 6281-410-028-10 | GLOWPLUG | * | 3 -25095 | | 1 | | | |
| 3B | 6281-410-028-20 | GLOWPLUG | * | 3 25096- | | 3 | | | |
| 4 | 6209-440-005-00 | NUT/FLANGE | * | 3 | | | | | |
| 5 | 6219-732-022-10 | CONECTOR/GLOWPLUG | * | 2 | | | | | |
| 6 | 1568-668-203-00 | HARNESS,GLOW | * | 1 | | | | | |
| 7 | 6281-990-017-00 | HARNESS/ENGINE/E3FH | * | 1 | | | | | |
| 8 | 6281-999-013-00 | BAND | * | 3 | | | | | |
| 9 | 6281-990-016-20 | HARNESS/ENGINE ASSY | * | 1 | | | | | |
| 10 | 1376-402-003-00 | BAND,WIRE/140 | * | 2 | | | | | |
| 11 | 3746-172-013-00 | BAND,HARNESS | * | 1 44173- | | | | | |
| 12 | 6281-980-006-10 | SENSOR/ROTATIONAL SP | * | 2 | | | | | |
| 13 | V230-360-601-20 | FLANGEBOLT/M6X12 | * | 2 | | | | | |
| 14 | 6281-940-002-00 | SENSOR/BOOST | * | 1 | | | | | |
| 15 | V200-260-502-00 | BOLT/M5X20 | * | 1 | | | | | |
| 16 | V411-260-005-00 | WASHER,PL/M5 | * | 1 | | | | | |
| 17 | V401-160-005-00 | WASHER,SP/M5 | * | 1 | | | | | |
| 18 | 6224-000-010-10 | SENSOR/AIRFLOW | * | 1 | | | | | |
| 19 | V195-164-012-10 | SCREW/TAPPING | * | 2 | | | | | |
| 20 | 6224-000-007-00 | SENSOR/PRESSURE/DPF | * | 1 | | | | | |
| 21 | V360-260-006-00 | NUT/WASHER/M6 | * | 1 | | | | | |
| 22 | 6224-000-014-10 | SENSOR/RAMBDA | * | 1 | | | | | |
| 23 | 6281-999-040-00 | PLATE/CONNECTOR | * | 1 | | | | | |
| 24 | V231-360-801-20 | FLANGEBOLT/M8X12 | * | 1 | | | | | |
| 25 | 6281-999-013-00 | BAND | * | 1 -41981 | | | | | |
| 25A | 6281-999-048-00 | BAND/HARNESS | * | 1 41982- | | | | | |
| 26 | 6224-000-015-10 | SENSOR/EXHAUST/TEMP | * | 3 | | | | | |

# FIG. 27 ELECTRIC (2)

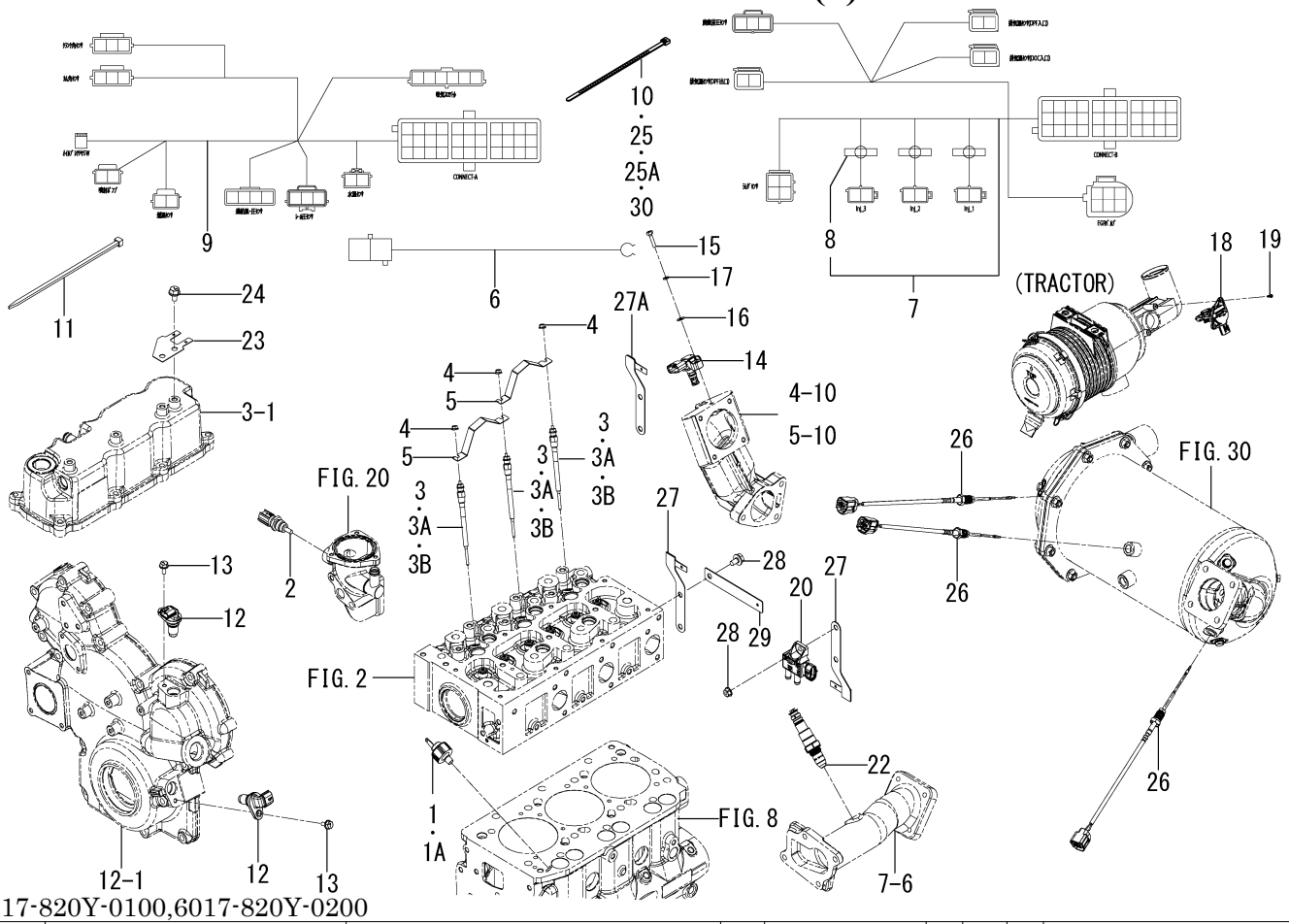


6017-820Y-0100,6017-820Y-0200

| KEY | PART CODE | DESCRIPTION | SPC | TYPE OF MODEL E3FH TDEG01 | | ITC | COL | GRP | REMARKS |
|---|---|---|---|---|---|---|---|---|---|
| 27 | 6281-999-021-00 | BRACKET/CONNECTOR | * | 2 -10226 | | | | | |
| 27A | 6281-999-021-10 | BRACKET/CONNECTOR | * | 2 10227- | | 1 | | | |
| 28 | V231-360-801-20 | FLANGEBOLT/M8X12 | * | 2 | | | | | |
| 29 | 6281-999-045-00 | PLATE/CONNECTOR | * | 1 6184- | | | | | |
| 30 | 3746-172-013-00 | BAND,HARNESS | * | 1 6184- | | | | | |

# FIG. 28 ELECTRIC (3)

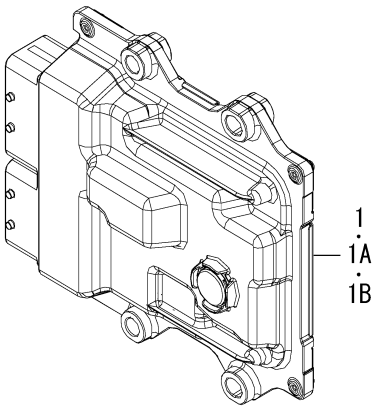


6017-851H-0100

| KEY | PART CODE | DESCRIPTION | SPC | TYPE OF MODEL E3FH TDEG01 | | ITC | COL | GRP | REMARKS |
|---|---|---|---|---|---|---|---|---|---|
| 1 | 6281-500-109-10 | ECU ASSY | * | 1 -8145 | | 3 | | | |
| 1A | 6281-500-109-20 | ECU ASSY | * | 1 -20686 | | 1 | | | |
| 1B | 6281-500-109-30 | ECU ASSY | * | 1 20687- | | 1 | | | |

# FIG. 29 LABEL/NAME

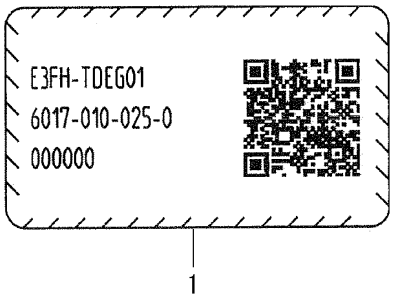


6017-911Q-0100

| KEY | PART CODE | DESCRIPTION | SPC | TYPE OF MODEL | | ITC | COL | GRP | REMARKS |
|---|---|---|---|---|---|---|---|---|---|
| | | | | E3FH TDEG01 | | | | | |
| 1 | 6285-885-578-00 | LABEL/NAME | * | 1 | | | | | |

# FIG. 30 MUFFLER

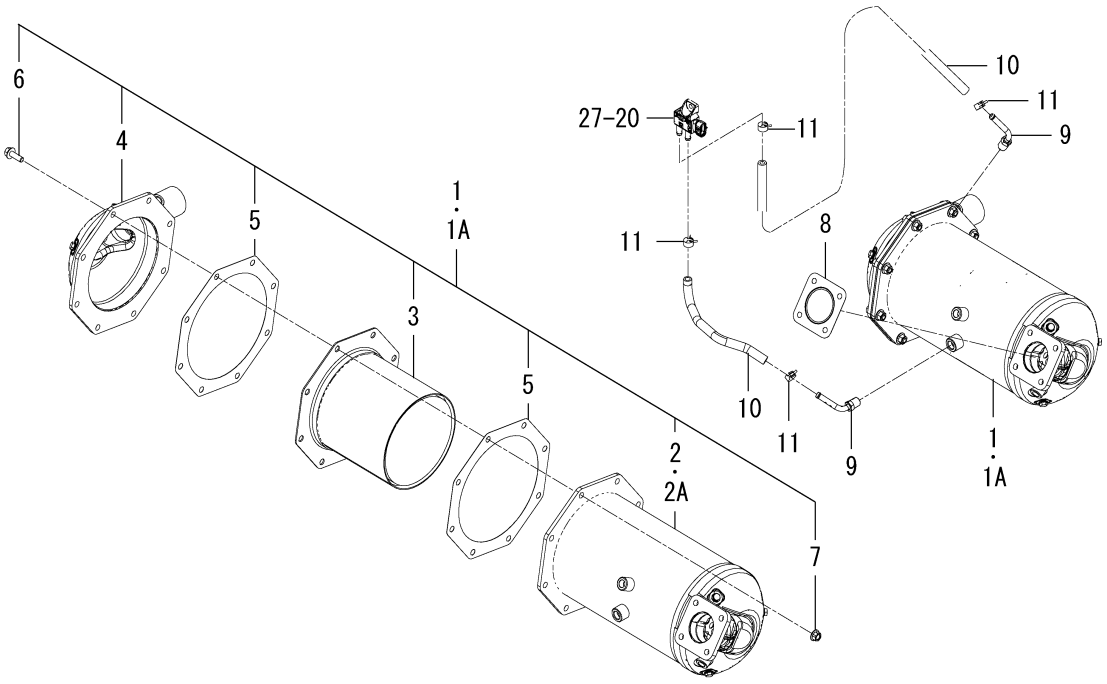


6017-930D-0100

| KEY | PART CODE | DESCRIPTION | SPC | TYPE OF MODEL E3FH TDEG01 | | ITC | COL | GRP | REMARKS |
|---|---|---|---|---|---|---|---|---|---|
| 1 | 6216-400-018-00 | DPF/MUFFLER COMP | * | 1 -36393 | | | | | |
| 1A | 6216-400-018-10 | DPF/MUFFLER COMP | * | 1 36394- | | 1 | | | |
| 2 | 6216-420-015-00 | MONOLITHCATALYS ASSY | * | 1 -33372 | | | | | |
| 2A | 6216-420-015-10 | MONOLITHCATALYS ASSY | * | 1 33373- | | 1 | | | |
| 3 | 6216-430-005-00 | DPF ASSY | * | 1 | | | | | |
| 4 | 6216-410-009-00 | ENDPLATE ASSY | * | 1 | | | | | |
| 5 | 6216-452-002-00 | GASKET | * | 2 | | | | | |
| 6 | 6209-046-068-00 | FLANGEBOLT | * | 8 | | | | | |
| 7 | 6209-440-008-00 | FLANGENUT | * | 8 | | | | | |
| 8 | 6214-145-032-10 | GASKET/DPF | * | 1 | | | | | |
| 9 | 6224-000-020-00 | PIPE/PRESSURE ASSY | * | 2 | | | | | |
| 10 | 6209-360-225-00 | HOSE/PRESSURESENSOR | * | 2 | | | | | |
| 11 | J062-138-148-00 | CLIP/HOSE/13.8-14.8 | * | 4 | | | | | |

# FIG. 31 REPAIR PARTS(OPTION)

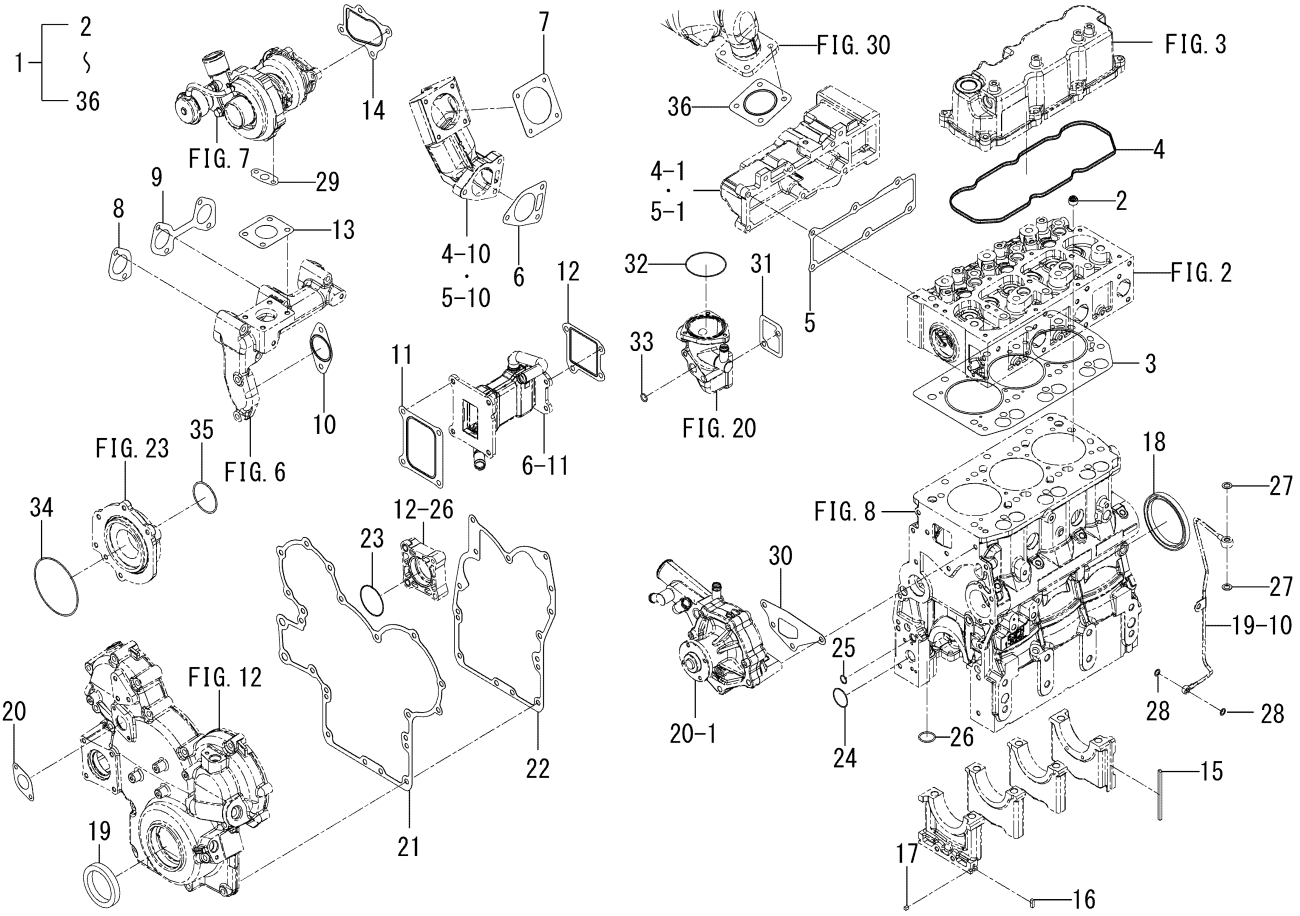


6017-999 -0100

| KEY | PART CODE | DESCRIPTION | SPC | TYPE OF MODEL E3FH TDEG01 | | ITC | COL | GRP | REMARKS |
|---|---|---|---|---|---|---|---|---|---|
| 1 | 6287-810-062-30 | REPAIR/ENGINESET | T | 1 | | | | | |
| 2 | 6212-569-002-00 | SEAL,OIL | T | 6 | | | | | |
| 3 | 6211-141-063-30 | GASKET/CYLINDERHEAD | T | 1 | | | | | |
| 4 | 6211-173-028-10 | SEAL/CYLINDER HEAD C | T | 1 | | | | | |
| 5 | 6214-115-023-10 | GASKET/INLETMANIFOLD | T | 1 | | | | | |
| 6 | 6214-115-020-20 | GASKET/INLET | T | 1 | | | | | |
| 7 | 6214-115-021-00 | GASKET/INLETVALVE | T | 1 | | | | | |
| 8 | 6214-145-035-00 | GASKET/EXH/SINGLE | T | 1 | | | | | |
| 9 | 6214-145-036-00 | GASKET/EXH/DOUBLE | T | 1 | | | | | |
| 10 | 6214-146-007-00 | GASKET/EGRVALVE | T | 1 | | | | | |
| 11 | 6214-146-004-10 | GASKET/EGR/COOLER | T | 1 | | | | | |
| 12 | 6214-146-006-10 | GASKET/EGR/PIPE | T | 1 | | | | | |
| 13 | 6214-145-037-10 | GASKET/EXHAUST | T | 1 | | | | | |
| 14 | 6214-145-031-10 | GASKET/TURBO | T | 1 | | | | | |
| 15 | 6211-258-006-00 | SEAL/BEARINGCAP | T | 2 | | | | | |
| 16 | 6211-258-007-00 | SEAL/BEARINGCAP/14 | T | 2 | | | | | |
| 17 | 6211-258-002-00 | SEAL,BEARING CAP/7 | T | 2 | | | | | |
| 18 | 6209-625-003-20 | OILSEAL | T | 1 | | | | | |
| 19 | 6209-625-004-00 | OILSEAL | T | 1 | | | | | |
| 20 | 6211-312-032-00 | GASKET/COVER | T | 1 | | | | | |
| 21 | 6211-312-031-60 | GASKET/GEARCASE | T | 1 | | | | | |
| 22 | 6211-312-030-70 | GASKET/PLATE | T | 1 | | | | | |
| 23 | V723-102-005-00 | O-RING/1A,S50 | T | 1 | | | | | |
| 24 | V723-102-003-00 | O-RING/1A,S30 | T | 1 | | | | | |
| 25 | V720-102-401-10 | O-RING/1A,P11 | T | 1 | | | | | |
| 26 | V720-102-401-80 | O-RING/1A,P18 | T | 1 | | | | | |
| 27 | 6209-920-003-00 | GASKET | T | 2 | | | | | |
| 28 | 6215-619-028-00 | WASHER/PLATE/COPPER | T | 2 | | | | | |
| 29 | 6209-630-004-30 | GASKET | T | 1 | | | | | |
| 30 | 6213-613-010-00 | GASKET/SPACER | T | 1 | | | | | |

# FIG. 31 REPAIR PARTS(OPTION)

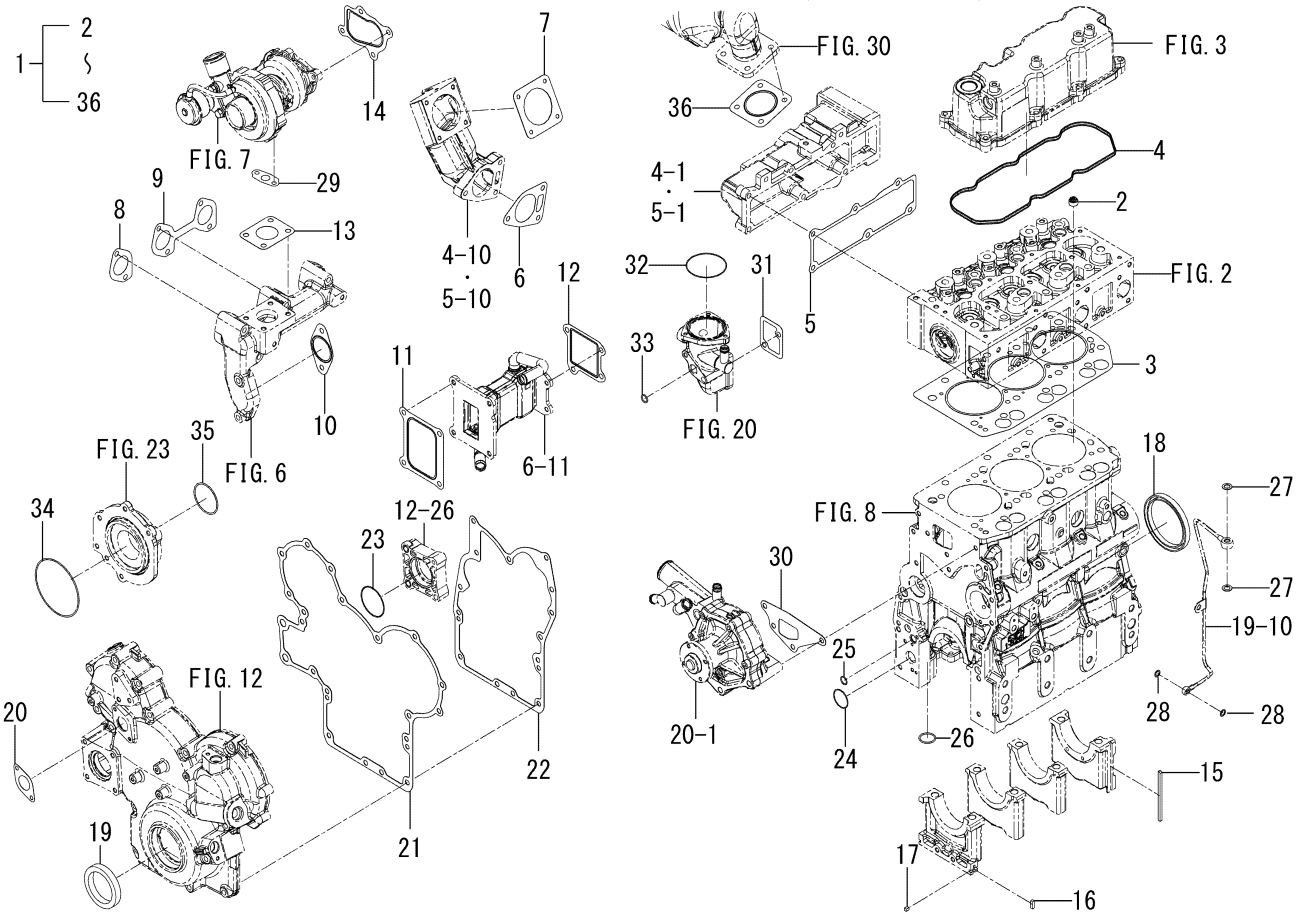


6017-999 -0100

| KEY | PART CODE | DESCRIPTION | SPC | TYPE OF MODEL E3FH TDEG01 | | ITC | COL | GRP | REMARKS |
|---|---|---|---|---|---|---|---|---|---|
| 31 | 6213-743-006-00 | GASKET/HOUSING | T | 1 | | | | | |
| 32 | 6213-741-001-00 | GASKET/THERMOSTAT | T | 1 | | | | | |
| 33 | 6213-729-044-00 | RING/O/EGRPIPE | T | 1 | | | | | |
| 34 | V721-103-109-50 | O-RING/1A,G95 | T | 1 | | | | | |
| 35 | 6219-751-011-00 | RING/O/SUPPLYPUMP | T | 1 | | | | | |
| 36 | 6214-145-032-10 | GASKET/DPF | T | 1 | | | | | |

# C H A S S I S

# FIG. 1 BRACKET(ENGINE)SYSTEM(237F)

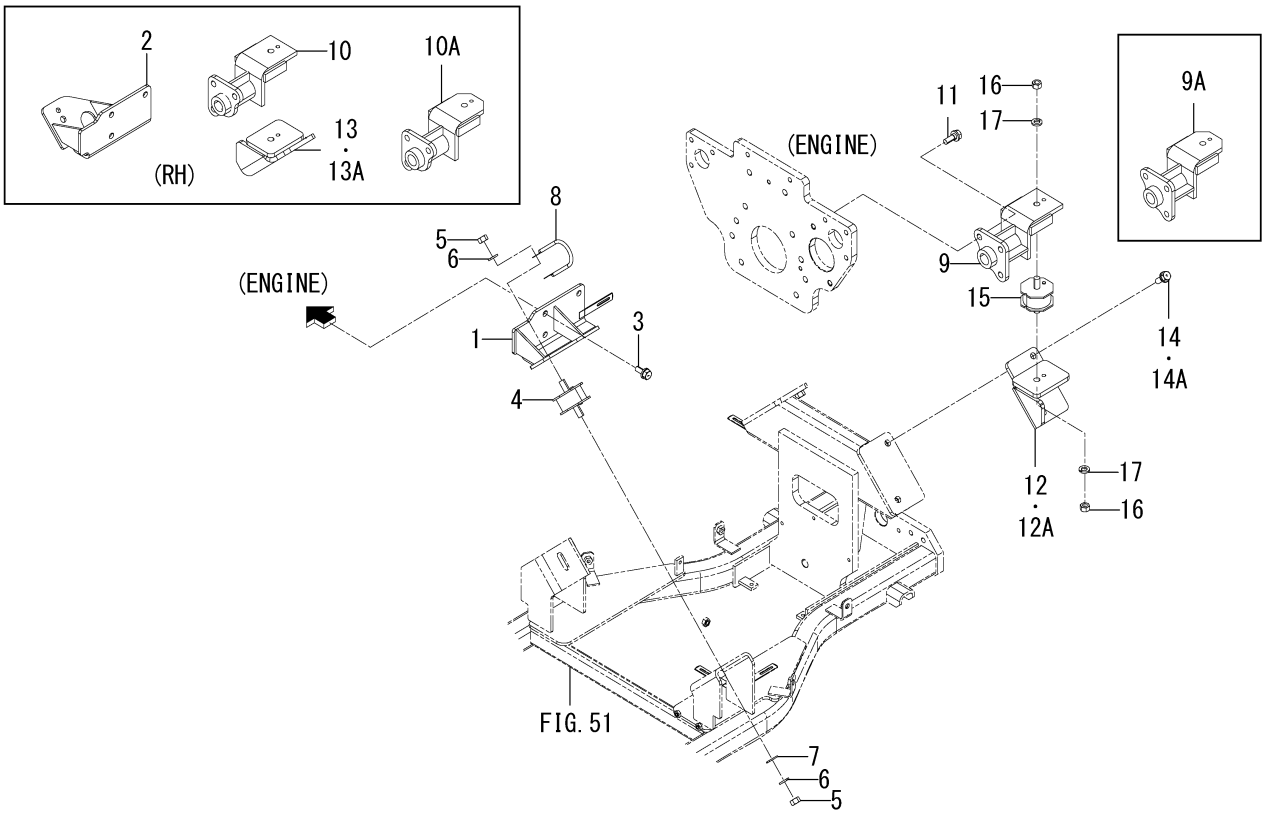


1832-101B-0100

| KEY | PART CODE | DESCRIPTION | SPC | TYPE OF MODEL | | ITC | COL | GRP | REMARKS |
|---|---|---|---|---|---|---|---|---|---|
| | | | | SF225F | SF237F | | | | |
| 1 | 1832-101-610-00 | BRACKET/FRONT/L COMP | * | | 1 | | | | |
| 2 | 1832-101-620-00 | BRACKET/FRONT/R COMP | * | | 1 | | | | |
| 3 | 6901-931-225-00 | BOLT,SEMS/M12X25/7T | * | | 6 | | | | |
| 4 | 3623-150-003-10 | INSULATOR/MOUNT/LH | * | | 2 | | | | |
| 5 | V304-260-012-00 | NUT/M12 | * | | 4 | | | | |
| 6 | V401-160-012-00 | WASHER,SP/M12 | * | | 4 | | | | |
| 7 | V411-260-012-00 | WASHER,PL/M12 | * | | 2 | | | | |
| 8 | 3623-263-001-10 | CABLE/ENGINE/EARTH | * | | 1 | | | | |
| 9 | 1832-101-640-10 | BRACKET/MOUNT/L COMP | * | | 1-181 | | | | |
| 9A | 1832-101-640-20 | BRACKET/MOUNT/L COMP | * | | 182- | 1 | | | |
| 10 | 1832-101-670-10 | BRACKET/MOUNT/R COMP | * | | 1-181 | | | | |
| 10A | 1832-101-670-20 | BRACKET/MOUNT/R COMP | * | | 182- | 1 | | | |
| 11 | 1725-201-002-00 | BOLT/S | * | | 6 | | | | |
| 12 | 1832-101-650-00 | BRACKET/BASE/LH COMP | * | | 1-3 | | | | |
| 12A | 1832-101-650-10 | BRACKET/BASE/LH COMP | * | | 4- | 1 | | | |
| 13 | 1832-101-660-00 | BRACKET/BASE/RH COMP | * | | 1-3 | | | | |
| 13A | 1832-101-660-10 | BRACKET/BASE/RH COMP | * | | 4- | 1 | | | |
| 14 | 1725-201-002-00 | BOLT/S | * | | 4-3 | | | | |
| 14A | 6901-931-235-00 | BOLT,SEMS/M12X35/7T | * | | 4-4 | | | | |
| 15 | 3623-150-003-10 | INSULATOR/MOUNT/LH | * | | 2 | | | | |
| 16 | V304-260-012-00 | NUT/M12 | * | | 4 | | | | |
| 17 | V401-160-012-00 | WASHER,SP/M12 | * | | 4 | | | | |

# FIG. 2 BRACKET(ENGINE)SYSTEM(225F)

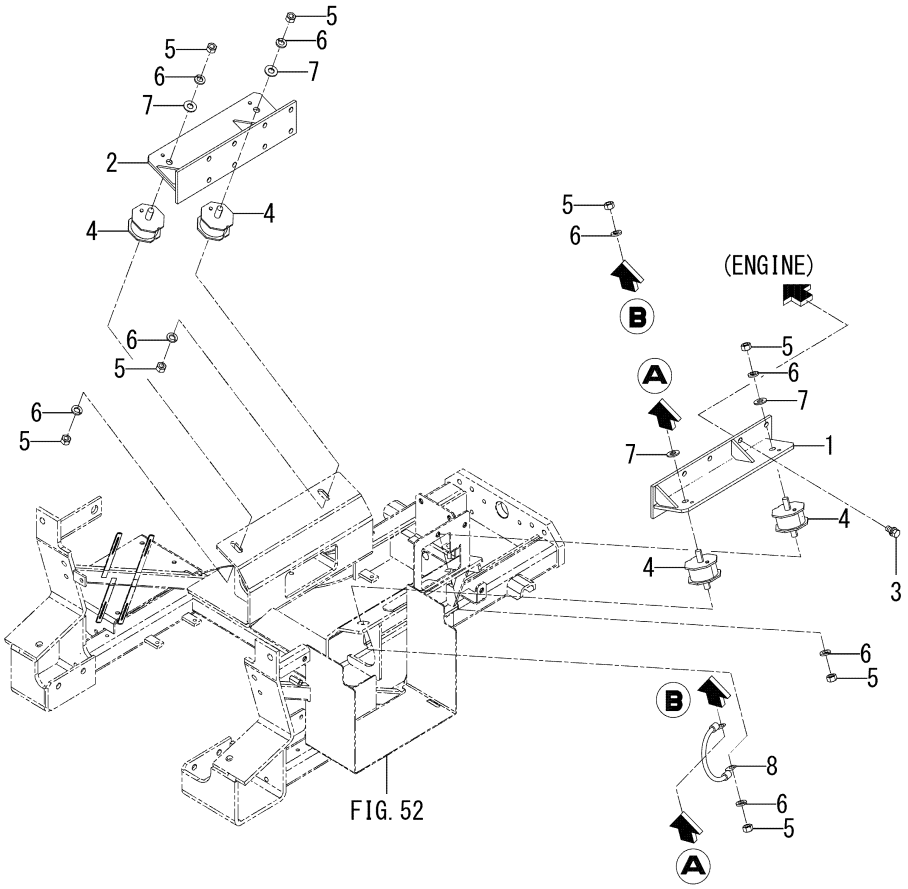


1832-101C-0100

| KEY | PART CODE | DESCRIPTION | SPC | TYPE OF MODEL | | ITC | COL | GRP | REMARKS |
|---|---|---|---|---|---|---|---|---|---|
| | | | | SF225F | SF237F | | | | |
| 1 | 1832-101-710-00 | BRACKET/MOUNT/L COMP | * | 1 | | | | | |
| 2 | 1832-101-720-00 | BRACKET/MOUNT/R COMP | * | 1 | | | | | |
| 3 | 6901-911-020-00 | BOLT,SEMS/M10X20,7T | * | 16 | | | | | |
| 4 | 3623-150-003-10 | INSULATOR/MOUNT/LH | * | 4 | | | | | |
| 5 | V304-260-012-00 | NUT/M12 | * | 8 | | | | | |
| 6 | V401-160-012-00 | WASHER,SP/M12 | * | 8 | | | | | |
| 7 | V411-260-012-00 | WASHER,PL/M12 | * | 4 | | | | | |
| 8 | 3623-263-001-10 | CABLE/ENGINE/EARTH | * | 1 | | | | | |

# FIG. 3 RADIATOR SYSTEM(237F)

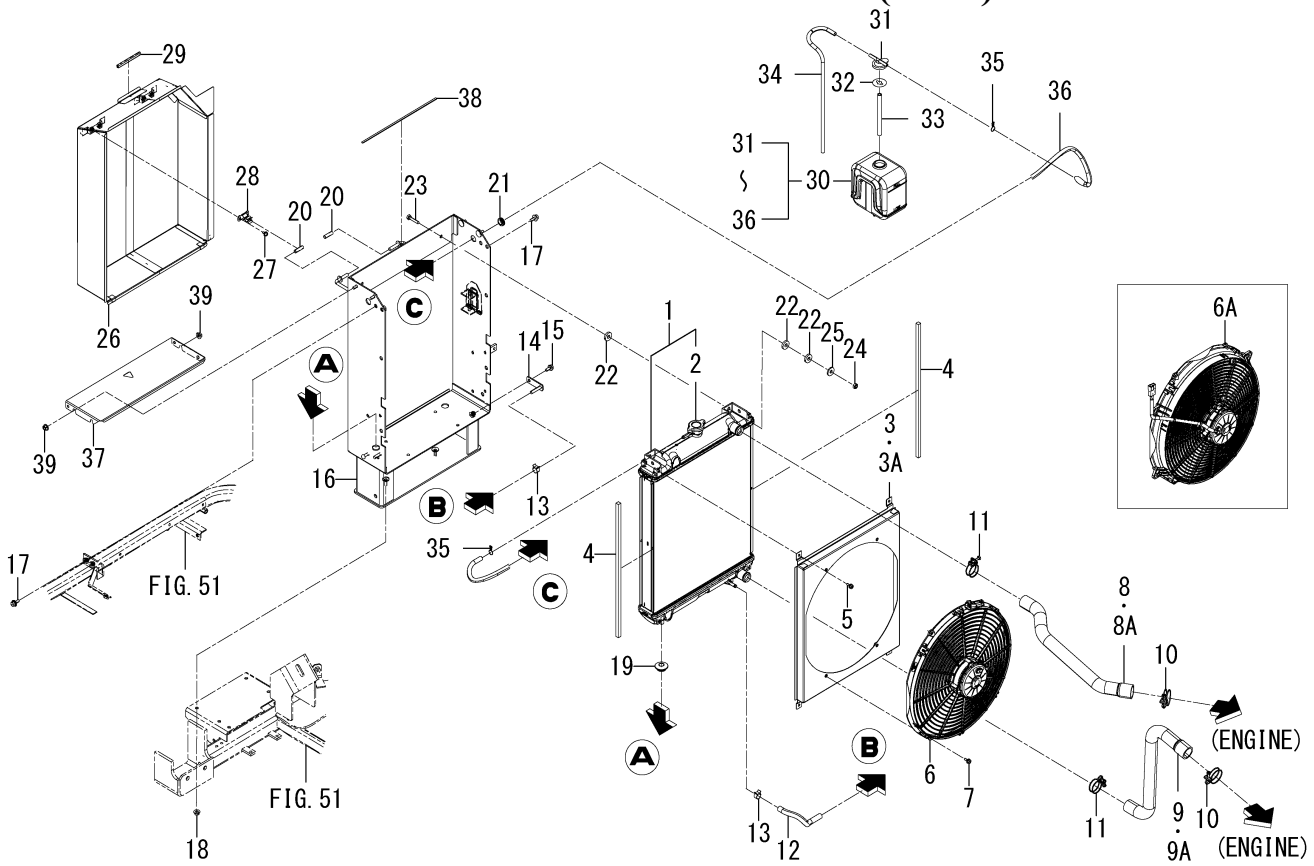


1832-102B-0100

| KEY | PART CODE | DESCRIPTION | SPC | TYPE OF MODEL | | ITC | COL | GRP | REMARKS |
|---|---|---|---|---|---|---|---|---|---|
| | | | | SF225F | SF237F | | | | |
| 1 | 1832-102-330-00 | RADIATOR ASSY | * | | 1 | | | | |
| 2 | 1650-102-202-10 | CAP | * | | 1 | | | | |
| 3 | 1832-102-220-00 | SHROUD COMP | * | | 1-645 | | | | |
| 3A | 1832-102-220-10 | SHROUD COMP | * | | 646- | 1 | | | |
| 4 | 1770-102-004-00 | INSULATOR/10X10X450 | * | | 2 | | | | |
| 5 | V210-360-601-60 | BOLT,SP/M6X16 | * | | 4 | | | | |
| 6 | 1832-102-310-10 | FAN/RADIATOR/23 ASSY | * | | 1-779 | | | | |
| 6A | 1832-102-410-00 | FAN/RADIATOR/23 ASSY | * | | 780- | | | | |
| 7 | V210-360-601-60 | BOLT,SP/M6X16 | * | | 4 | | | | |
| 8 | 1832-102-062-00 | HOSE/RADIATOR/IN/237 | * | | 1-409 | | | | |
| 8A | 1832-102-062-10 | HOSE/RADIATOR/IN/237 | * | | 410- | 1 | | | |
| 9 | 1832-102-063-00 | HOSE/RADIATOR/OUT/23 | * | | 1-409 | | | | |
| 9A | 1832-102-063-10 | HOSE/RADIATOR/OUT/23 | * | | 410- | 1 | | | |
| 10 | J061-236-044-00 | CLAMP/WIRE/36-44 | * | | 2 | | | | |
| 11 | J061-230-038-00 | CLAMP/WIRE/30-38 | * | | 2 | | | | |
| 12 | 1728-102-220-00 | HOSE/290 ASSY | * | | 1 | | | | |
| 13 | J062-147-159-00 | CLIP/HOSE/14.7-15.9 | * | | 2 | | | | |
| 14 | 1809-102-330-00 | STAY/PLUG | * | | 1 | | | | |
| 15 | V231-360-801-60 | FLANGEBOLT/M8X16 | * | | 1 | | | | |
| 16 | 1832-102-610-00 | FRAME/RADIATOR COMP | * | | 1 | | | | |
| 17 | V211-360-802-00 | BOLT,SP/M8X20 | * | | 4 | | | | |
| 18 | V362-260-008-00 | NUT/WASHER/M8 | * | | 2 | | | | |
| 19 | 1421-603-004-00 | BUSH,LEVER | * | | 2 | | | | |
| 20 | 1716-601-009-00 | TUBE/07X09X30 | * | | 2 | | | | |
| 21 | 2139-505-002-00 | GROMMET | * | | 2 | | | | |
| 22 | 1423-616-004-00 | CUSHION/RUBBER/10X25 | * | | 6 | | | | |
| 23 | V201-260-803-50 | BOLT/M8X35 | * | | 2 | | | | |
| 24 | 1719-312-001-00 | U-NUT | * | | 2 | | | | |
| 25 | 4101-102-038-00 | WASHER/24X9X3.2 | * | | 2 | | | | |
| 26 | 1832-102-620-10 | COVER/RADIATOR COMP | * | | 1 | 1 | | | |

# FIG. 3 RADIATOR SYSTEM(237F)

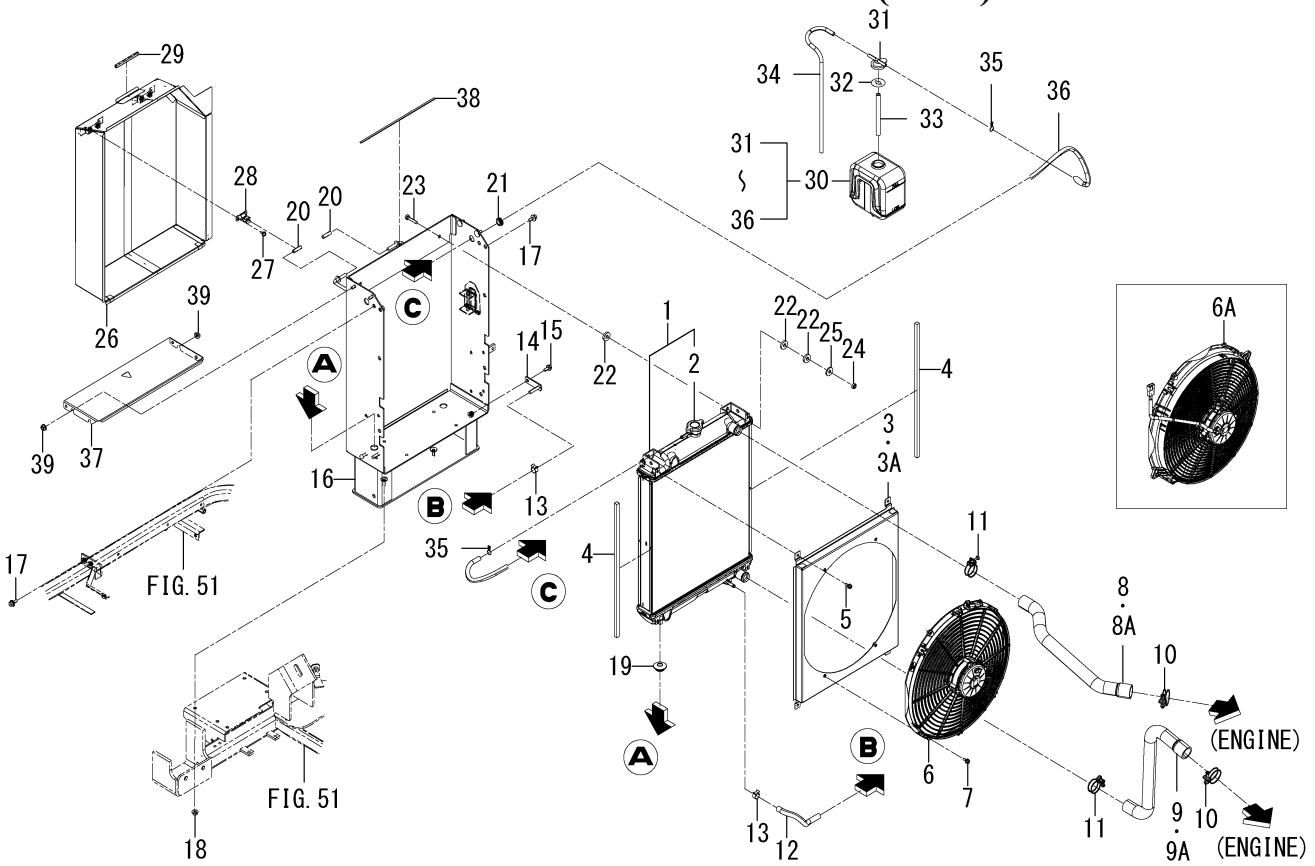


1832-102B-0100

| KEY | PART CODE | DESCRIPTION | SPC | TYPE OF MODEL | | ITC | COL | GRP | REMARKS |
|---|---|---|---|---|---|---|---|---|---|
| | | | | SF225F | SF237F | | | | |
| 27 | V120-366-001-20 | SCREW,SP/M6X12 | * | | 4 | | | | |
| 28 | 1729-604-003-00 | SPRING | * | | 2 | | | | |
| 29 | 1685-604-003-00 | INSULATOR/90 | * | | 1 | | | | |
| 30 | 1690-102-210-00 | RESERVETANK ASSY | * | | 1 | | | | |
| 31 | 1690-102-212-00 | CAP | * | | 1 | | | | |
| 32 | 1690-102-213-00 | PACKING | * | | 1 | | | | |
| 33 | 1690-102-214-00 | HOSE/RUBBER | * | | 1 | | | | |
| 34 | 1690-102-215-00 | HOSE/RUBBER | * | | 1 | | | | |
| 35 | 1690-102-216-00 | CLUMP | * | | 2 | | | | |
| 36 | 1690-102-217-00 | HOSE/RUBBER | * | | 1 | | | | |
| 37 | 1832-102-065-00 | COVER/RADIATOR | * | | 1 | | | | |
| 38 | 1786-631-005-00 | INSULATOR/300 | * | | 1 | | | | |
| 39 | V362-260-008-00 | NUT/WASHER/M8 | * | | 4 | | | | |

# FIG. 4 RADIATOR SYSTEM(225F)

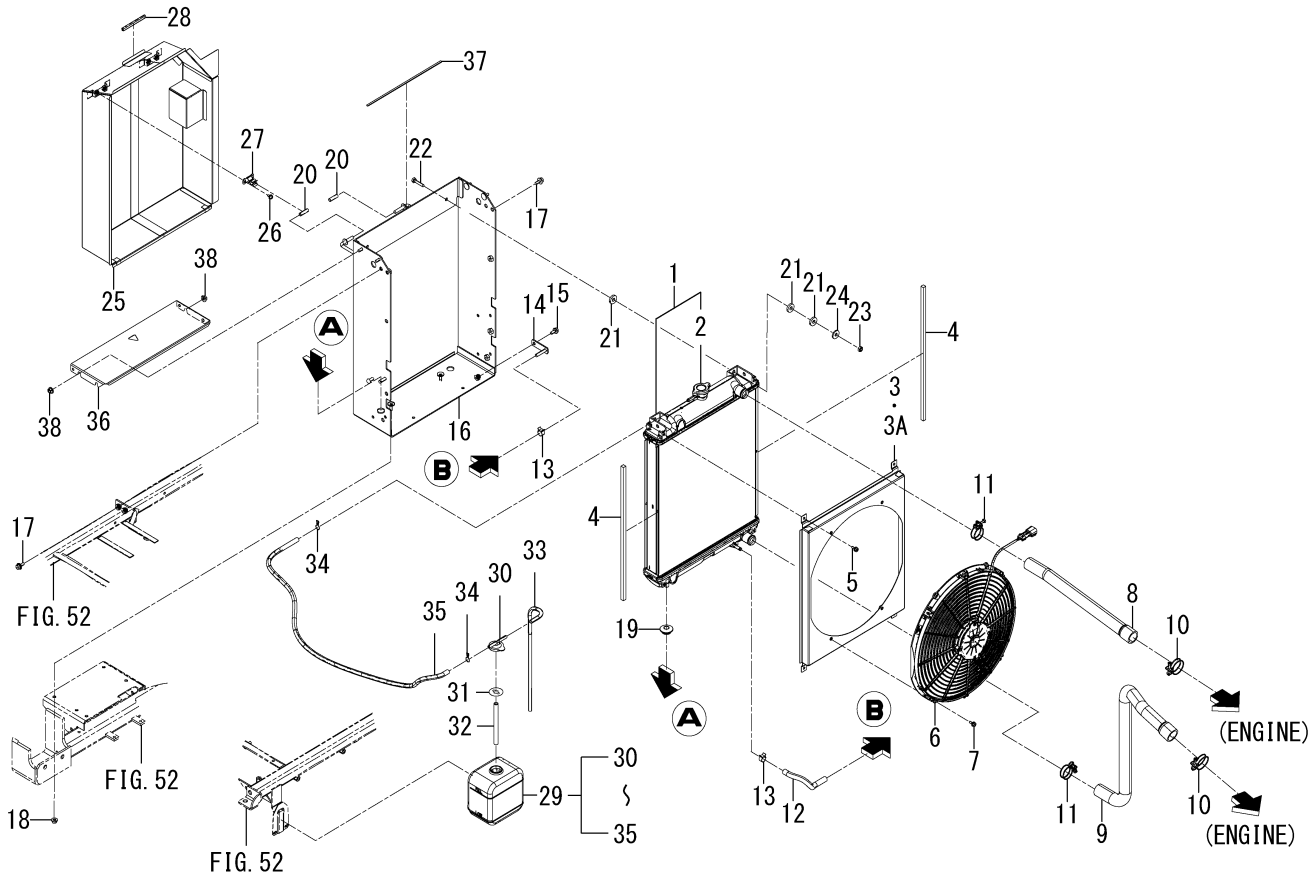


1832-102C-0100

| KEY | PART CODE | DESCRIPTION | SPC | TYPE OF MODEL | | ITC | COL | GRP | REMARKS |
|---|---|---|---|---|---|---|---|---|---|
| | | | | SF225F | SF237F | | | | |
| 1 | 1832-102-330-00 | RADIATOR ASSY | * | 1 | | | | | |
| 2 | 1650-102-202-10 | CAP | * | 1 | | | | | |
| 3 | 1832-102-220-00 | SHROUD COMP | * | 1 -459 | | | | | |
| 3A | 1832-102-220-10 | SHROUD COMP | * | 1 460- | | 1 | | | |
| 4 | 1770-102-004-00 | INSULATOR/10X10X450 | * | 2 | | | | | |
| 5 | V210-360-601-60 | BOLT,SP/M6X16 | * | 4 | | | | | |
| 6 | 1832-102-320-00 | FAN/RADIATOR/22 ASSY | * | 1 | | | | | |
| 7 | V210-360-601-60 | BOLT,SP/M6X16 | * | 4 | | | | | |
| 8 | 1832-102-051-10 | HOSE/RADIATOR/IN/224 | * | 1 | | | | | |
| 9 | 1832-102-052-00 | HOSE/RADIATOR/OUT/22 | * | 1 | | | | | |
| 10 | J061-236-044-00 | CLAMP/WIRE/36-44 | * | 2 | | | | | |
| 11 | J061-230-038-00 | CLAMP/WIRE/30-38 | * | 2 | | | | | |
| 12 | 1728-102-220-00 | HOSE/290 ASSY | * | 1 | | | | | |
| 13 | J062-147-159-00 | CLIP/HOSE/14.7-15.9 | * | 2 | | | | | |
| 14 | 1809-102-330-00 | STAY/PLUG | * | 1 | | | | | |
| 15 | V231-360-801-60 | FLANGEBOLT/M8X16 | * | 1 | | | | | |
| 16 | 1832-102-710-00 | FRAME/RADIATOR/225 | * | 1 | | | | | |
| 17 | V211-360-802-00 | BOLT,SP/M8X20 | * | 4 | | | | | |
| 18 | V362-260-008-00 | NUT/WASHER/M8 | * | 2 | | | | | |
| 19 | 1421-603-004-00 | BUSH,LEVER | * | 2 | | | | | |
| 20 | 1716-601-009-00 | TUBE/07X09X30 | * | 2 | | | | | |
| 21 | 1423-616-004-00 | CUSHION/RUBBER/10X25 | * | 6 | | | | | |
| 22 | V201-260-803-50 | BOLT/M8X35 | * | 2 | | | | | |
| 23 | 1719-312-001-00 | U-NUT | * | 2 | | | | | |
| 24 | 4101-102-038-00 | WASHER/24X9X3.2 | * | 2 | | | | | |
| 25 | 1832-102-230-30 | COVER/RADIATOR COMP | * | 1 | | 1 | 7F | | |
| 26 | V120-366-001-20 | SCREW,SP/M6X12 | * | 4 | | | | | |
| 27 | 1729-604-003-00 | SPRING | * | 2 | | | | | |
| 28 | 1685-604-003-00 | INSULATOR/90 | * | 1 | | | | | |
| 29 | 1690-102-210-00 | RESERVETANK ASSY | * | 1 | | | | | |

# FIG. 4 RADIATOR SYSTEM(225F)

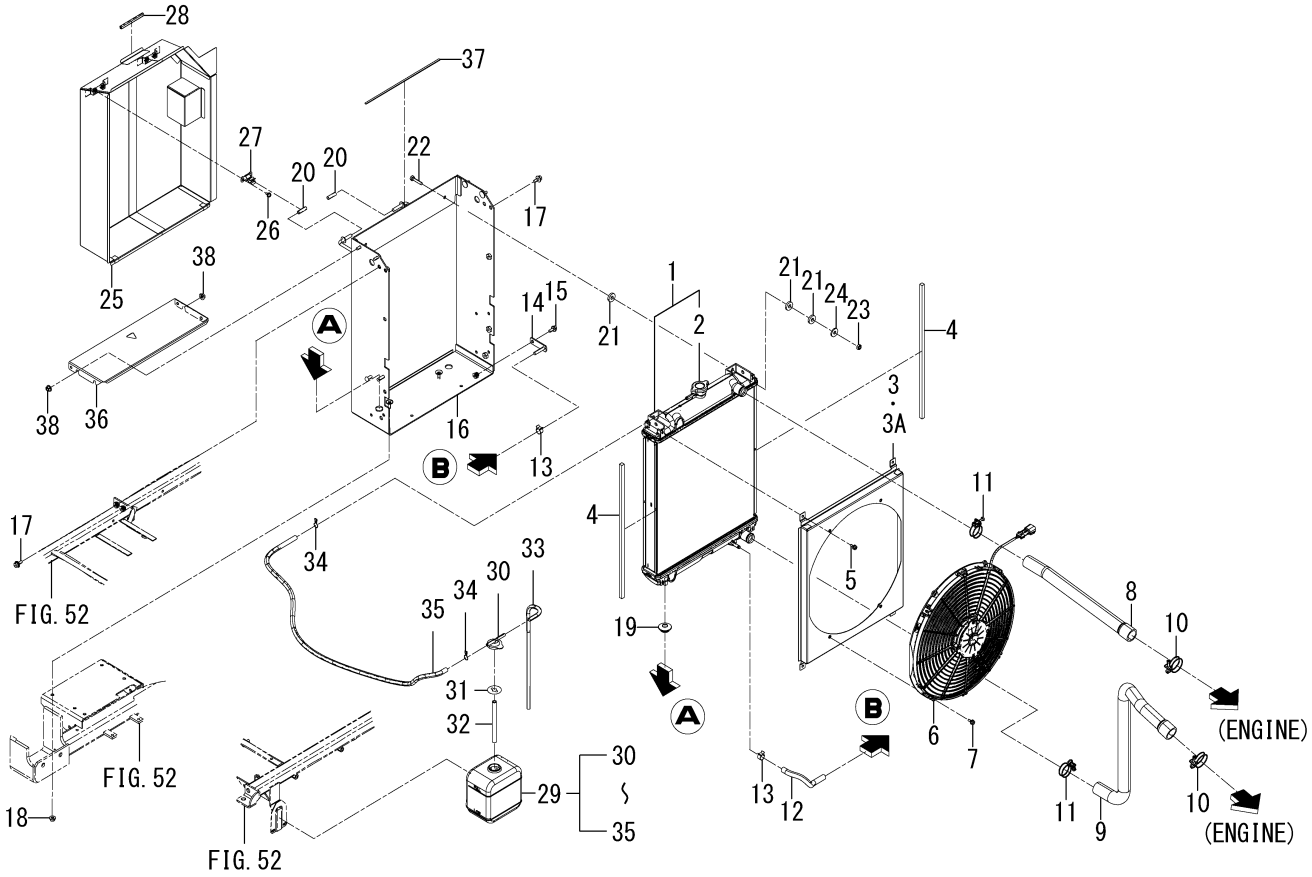


1832-102C-0100

| KEY | PART CODE | DESCRIPTION | SPC | TYPE OF MODEL | | ITC | COL | GRP | REMARKS |
|---|---|---|---|---|---|---|---|---|---|
| | | | | SF225F | SF237F | | | | |
| 30 | 1690-102-212-00 | CAP | * | 1 | | | | | |
| 31 | 1690-102-213-00 | PACKING | * | 1 | | | | | |
| 32 | 1690-102-214-00 | HOSE/RUBBER | * | 1 | | | | | |
| 33 | 1690-102-215-00 | HOSE/RUBBER | * | 1 | | | | | |
| 34 | 1690-102-216-00 | CLUMP | * | 2 | | | | | |
| 35 | 1690-102-217-00 | HOSE/RUBBER | * | 1 | | | | | |
| 36 | 1832-102-065-00 | COVER/RADIATOR | * | 1 | | | | | |
| 37 | 1786-631-005-00 | INSULATOR/300 | * | 1 | | | | | |
| 38 | V362-260-008-00 | NUT/WASHER/M8 | * | 4 | | | | | |

# FIG. 5 MUFFLER SYSTEM(225F)

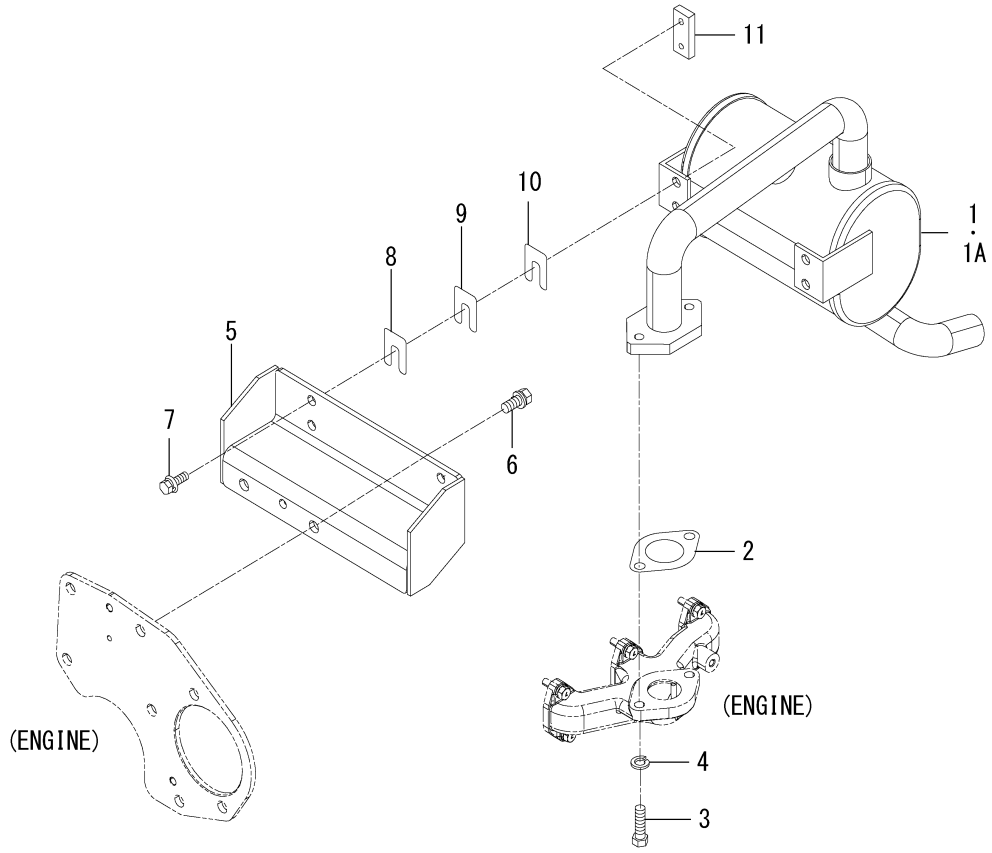


1832-103A-0100

| KEY | PART CODE | DESCRIPTION | SPC | TYPE OF MODEL | | ITC | COL | GRP | REMARKS |
|---|---|---|---|---|---|---|---|---|---|
| | | | | SF225F | SF237F | | | | |
| 1 | 1832-103-500-10 | MUFFLER COMP | * | 1 -234 | | | | | |
| 1A | 1832-103-500-20 | MUFFLER COMP | * | 1 235- | | 1 | | | |
| 2 | 1832-103-003-00 | GASKET | * | 1 | | | | | |
| 3 | V203-361-003-00 | BOLT/M10X30/7T,P1.25 | * | 2 | | | | | |
| 4 | V401-160-010-00 | WASHER,SP/M10 | * | 2 | | | | | |
| 5 | 1832-103-510-10 | BRACKET/MUFFLER/224 | * | 1 | | | | | |
| 6 | 6901-911-025-00 | BOLT,SEMS/M10X25,7T | * | 2 | | | | | |
| 7 | V211-660-802-50 | BOLT,SP/M8X25/7T | * | 4 | | | | | |
| 8 | 1725-103-002-00 | SHIM/0.6/B | * | 2 | | | | | |
| 9 | 1782-103-051-00 | SHIM/0.3 | * | 2 | | | | | |
| 10 | 1725-103-001-00 | SHIM/0.6/A | * | 2 | | | | | |
| 11 | 1832-103-053-00 | PLATE/I/22X50 | * | 2 | | | | | |

# FIG. 6 MUFFLER SYSTEM(237F)

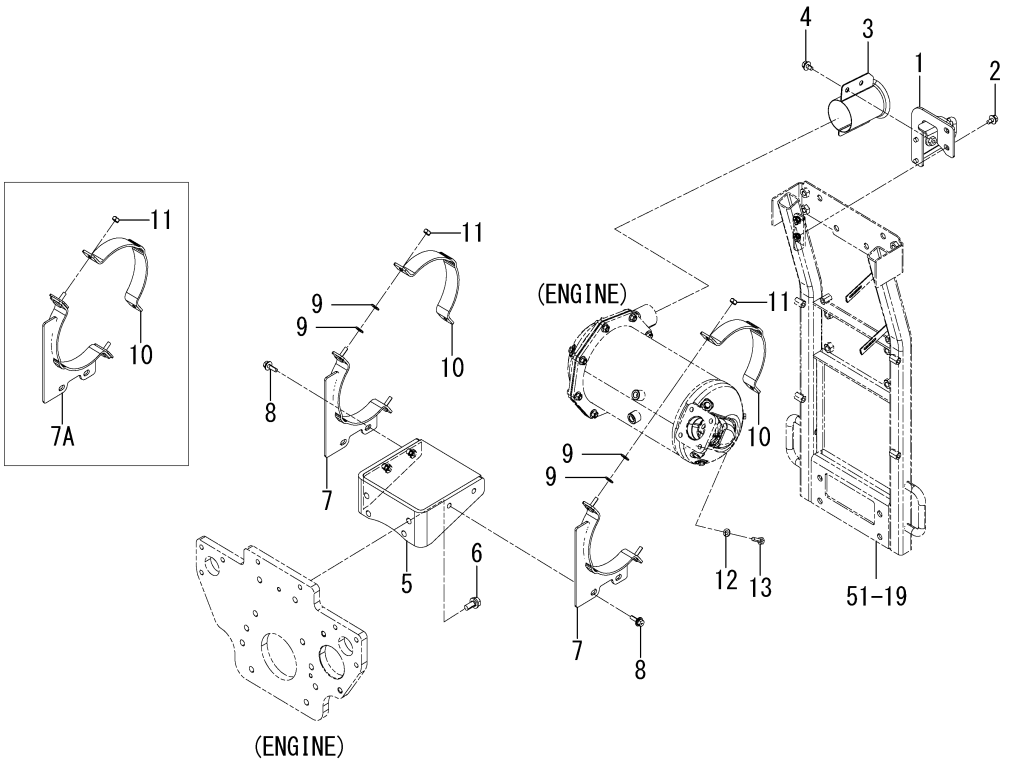


1832-103B-0100

| KEY | PART CODE | DESCRIPTION | SPC | TYPE OF MODEL | | ITC | COL | GRP | REMARKS |
|---|---|---|---|---|---|---|---|---|---|
| | | | | SF225F | SF237F | | | | |
| 1 | 1832-103-660-00 | BRACKET/TAIL COMP | * | | 1 | | | | |
| 2 | V211-360-802-00 | BOLT,SP/M8X20 | * | | 2 | | | | |
| 3 | 1801-103-300-10 | COVER/TAIL COMP | * | | 1 | | | | |
| 4 | V211-360-801-60 | BOLT,SP/M8X16 | * | | 2 | | | | |
| 5 | 1832-103-610-00 | BRACKET/DPF/237 COMP | * | | 1 | | | | |
| 6 | 6901-931-225-00 | BOLT,SEMS/M12X25/7T | * | | 2 | | | | |
| 7 | 1809-103-810-10 | HOLDER/DPF/LOWE COMP | * | | 2-4 | | | | |
| 7A | 1809-103-810-20 | HOLDER/DPF/LOWE COMP | * | | 25- | 1 | | | |
| 8 | V211-660-802-50 | BOLT,SP/M8X25/7T | * | | 4 | | | | |
| 9 | V411-700-008-00 | WASHER,PL/M8 | * | | 8-4 | | | | |
| 10 | 1809-103-081-00 | HOLDER/DPFMUFFLER | * | | 2 | | | | |
| 11 | 1719-312-001-00 | U-NUT | * | | 4 | | | | |
| 12 | V401-700-008-00 | WASHER,SP/M8 | * | | 4 | | | | |
| 13 | V201-700-802-50 | BOLT,SUS/M8X25 | * | | 4 | | | | |

# FIG. 7 CLEANER(AIR)SYSTEM(225F)(NO.1-816)

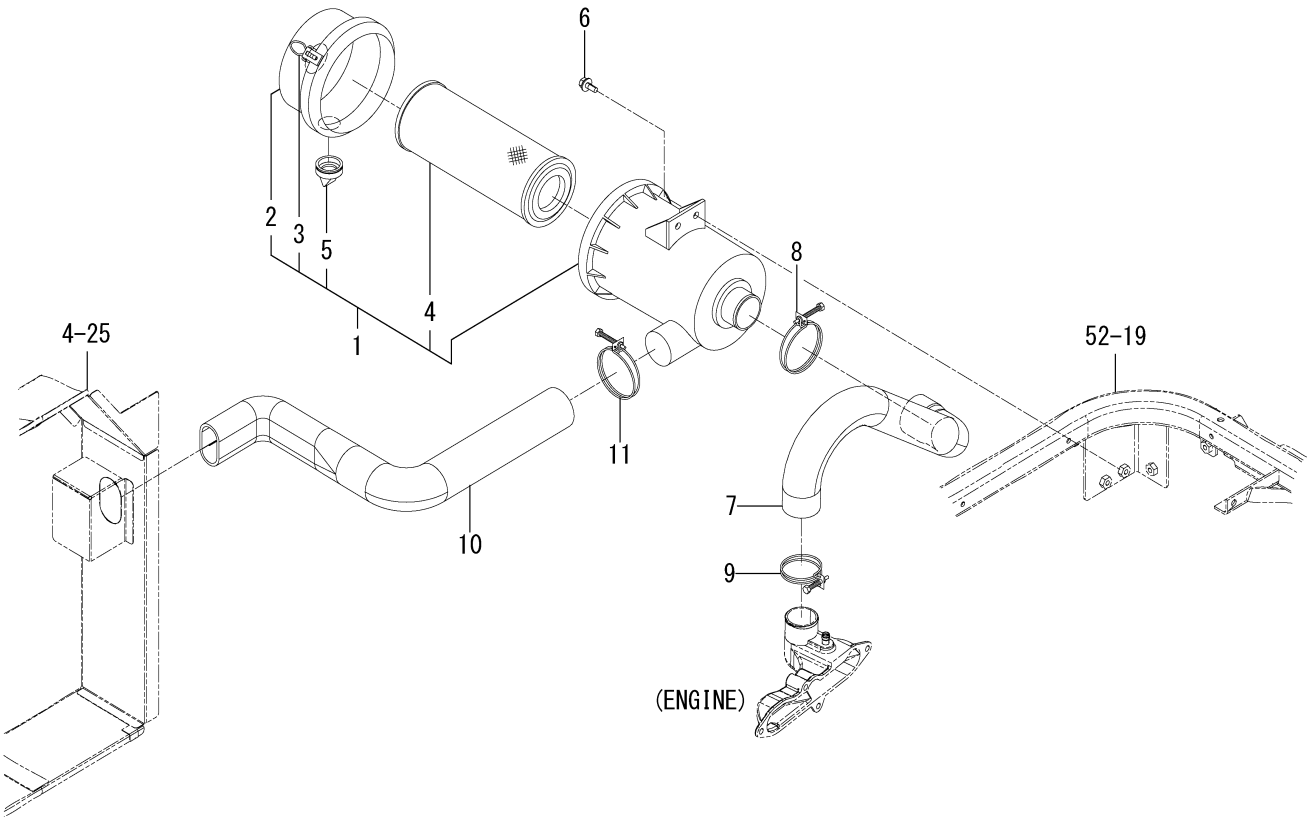


1832-104A-0100

| KEY | PART CODE | DESCRIPTION | SPC | TYPE OF MODEL | | ITC | COL | GRP | REMARKS |
|---|---|---|---|---|---|---|---|---|---|
| | | | | SF225F | SF237F | | | | |
| 1 | 1650-104-200-10 | CLEANER/AIR ASSY | * | 1 -816 | | | | | |
| 2 | 1650-104-210-00 | COVER ASSY | * | 1 -816 | | | | | |
| 3 | 1650-104-201-00 | CLIP | * | 2 -816 | | | | | |
| 4 | 1650-104-203-10 | ELEMENT ASSY | * | 1 -816 | | | | | |
| 5 | 1544-104-205-00 | VALVE | * | 1 -816 | | | | | |
| 6 | V211-360-802-00 | BOLT,SP/M8X20 | * | 2 -816 | | | | | |
| 7 | 1832-104-051-00 | HOSE/CLEANER/OUTLET/ | * | 1 -816 | | | | | |
| 8 | J061-252-063-00 | CLAMP/WIRE/52-63 | * | 1 -816 | | | | | |
| 9 | J061-247-055-00 | CLAMP/WIRE/47-55 | * | 1 -816 | | | | | |
| 10 | 1832-104-002-00 | HOSE/CLEANER/INLET | * | 1 -816 | | | | | |
| 11 | J061-252-063-00 | CLAMP/WIRE/52-63 | * | 1 -816 | | | | | |

# FIG. 8 CLEANER(AIR)SYSTEM(237F)

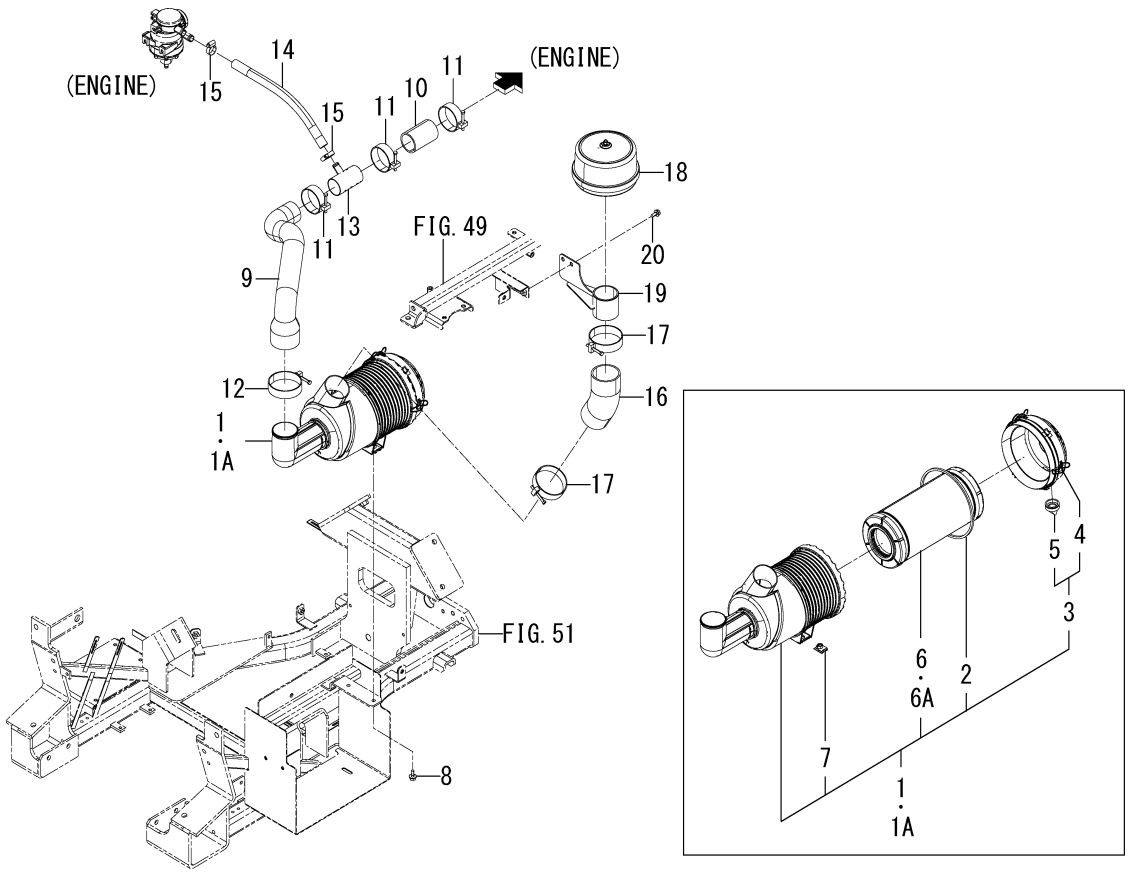


1832-104B-0100

| KEY | PART CODE | DESCRIPTION | SPC | TYPE OF MODEL | | ITC | COL | GRP | REMARKS |
|---|---|---|---|---|---|---|---|---|---|
| | | | | SF225F | SF237F | | | | |
| 1 | 1832-104-600-00 | CLEANER/AIR/65/237 | * | | 1 -505 | | | | |
| 1A | 1832-104-600-10 | CLEANER/AIR/65/237 | * | | 1 506- | 1 | | | |
| 2 | 1803-104-202-00 | GASKET | * | | 1 | | | | |
| 3 | 1806-104-230-00 | CAP COMP | * | | 1 | | | | |
| 4 | 1803-104-222-00 | CLAMP COMP | * | | 3 | | | | |
| 5 | 1803-104-223-00 | VALVE/UNLOAD | * | | 1 | | | | |
| 6 | 1803-104-203-00 | FILTER COMP | * | | 1 -505 | | | | |
| 6A | 1809-104-602-00 | FILTER | * | | 1 506- | | | | |
| 7 | 1803-104-205-00 | NUT/CLIP | * | | 2 | | | | |
| 8 | V211-360-802-50 | BOLT,SP/M8X25 | * | | 2 | | | | |
| 9 | 1832-104-061-00 | HOSE/CLEANER/OUTLET/ | * | | 1 | | | | |
| 10 | 1832-104-063-00 | HOSE/EG/INLET/237 | * | | 1 | | | | |
| 11 | J061-247-055-00 | CLAMP/WIRE/47-55 | * | | 3 | | | | |
| 12 | J061-269-080-00 | CLAMP/WIRE/69-80 | * | | 1 | | | | |
| 13 | 1809-104-610-00 | PIPE/CLEANER COMP | * | | 1 | | | | |
| 14 | 1832-104-064-00 | HOSE/14X22X385 | * | | 1 | | | | |
| 15 | J061-116-025-00 | CLAMP/WORM/16-25 | * | | 2 | | | | |
| 16 | 1832-104-062-00 | HOSE/CLEANER/INLET/2 | * | | 1 | | | | |
| 17 | J061-269-080-00 | CLAMP/WIRE/69-80 | * | | 2 | | | | |
| 18 | 1809-104-310-00 | PRECLEANER ASSY | * | | 1 | | | | |
| 19 | 1832-104-610-00 | STAY/PRECLEANER COMP | * | | 1 | | | | |
| 20 | V231-360-801-60 | FLANGEBOLT/M8X16 | * | | 2 | | | | |

# FIG. 9 CLEANER(AIR)SYSTEM(225F)(NO.817-)

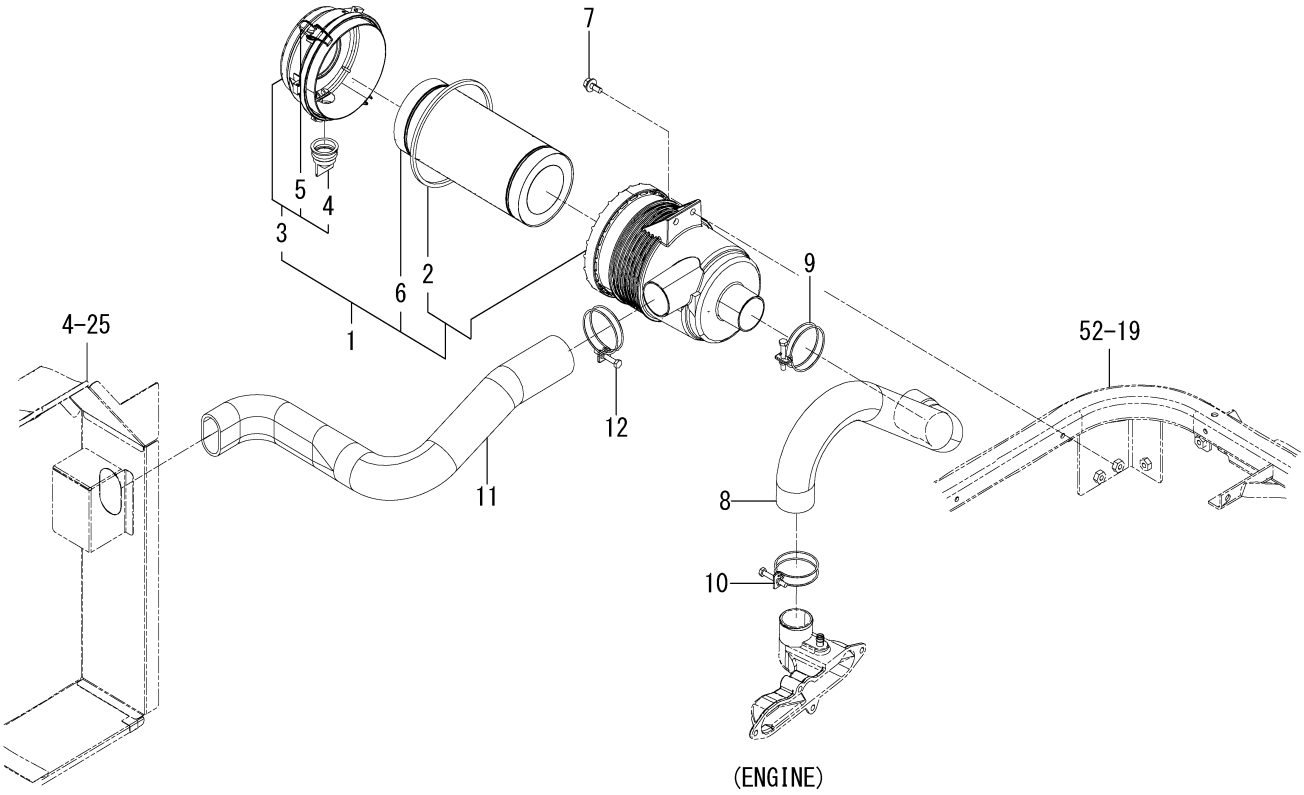


1832-104C-0100

| KEY | PART CODE | DESCRIPTION | SPC | TYPE OF MODEL | | ITC | COL | GRP | REMARKS |
|---|---|---|---|---|---|---|---|---|---|
| | | | | SF225F | SF237F | | | | |
| 1 | 1832-104-220-00 | CLEANER/AIR/225 ASSY | * | 1 817- | | | | | |
| 2 | 1813-104-223-00 | GASKET | * | 1 817- | | | | | |
| 3 | 1813-104-222-00 | CAP | * | 1 690- | | | | | |
| 4 | 1725-104-333-00 | VALVE/UNLOAD | * | 1 690- | | | | | |
| 5 | 1725-104-332-00 | CLAMP COMP | * | 2 690- | | | | | |
| 6 | 1723-103-301-10 | ELEMENT/1ST | * | 1 817- | | | | | |
| 7 | V211-360-802-00 | BOLT,SP/M8X20 | * | 2 817- | | | | | |
| 8 | 1832-104-051-00 | HOSE/CLEANER/OUTLET/ | * | 1 817- | | | | | |
| 9 | J061-252-063-00 | CLAMP/WIRE/52-63 | * | 1 817- | | | | | |
| 10 | J061-247-055-00 | CLAMP/WIRE/47-55 | * | 1 817- | | | | | |
| 11 | 1832-104-066-00 | HOSE/CLEANER/INLET/2 | * | 1 817- | | | | | |
| 12 | J061-252-063-00 | CLAMP/WIRE/52-63 | * | 1 817- | | | | | |

# FIG. 10 PIPING(FUEL)SYSTEM(225F)

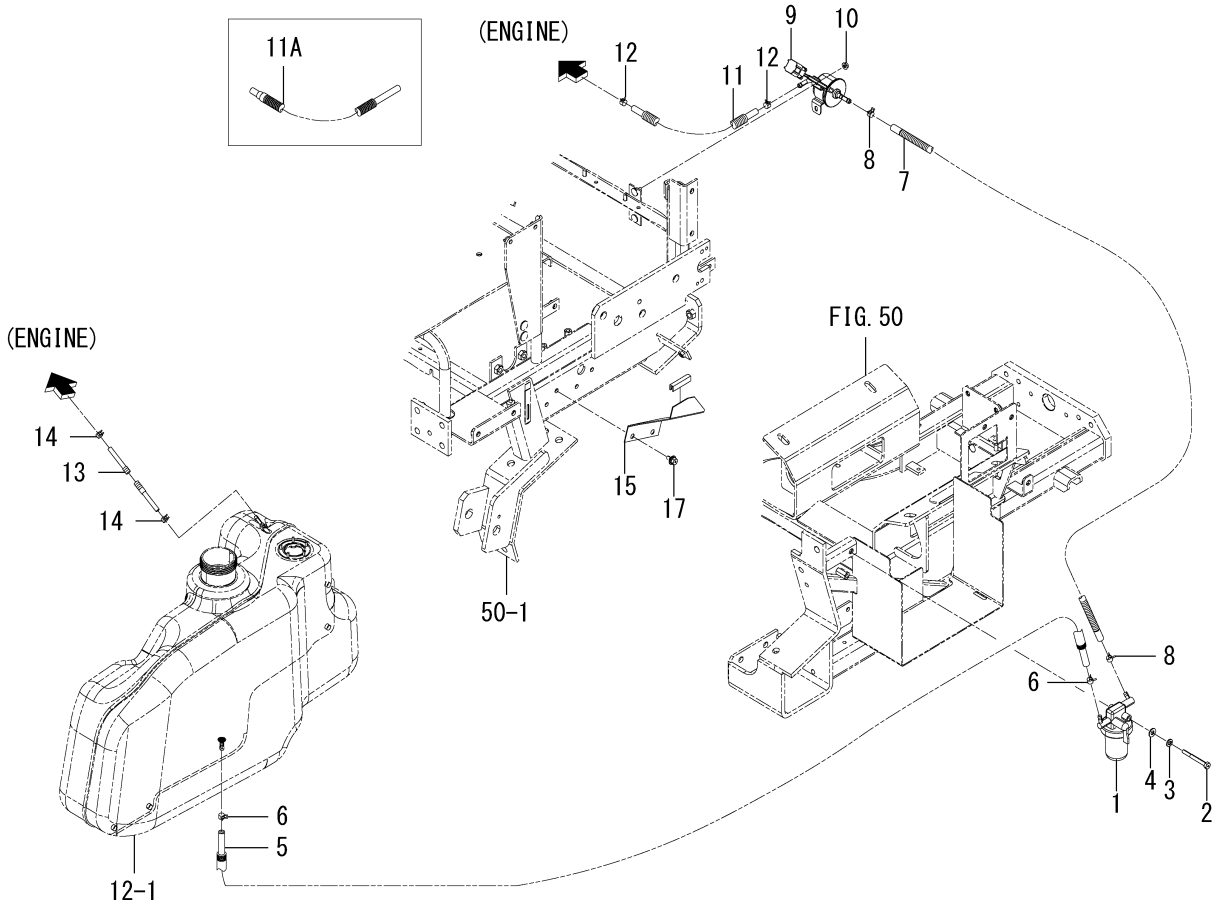


1832-105 -0100

| KEY | PART CODE | DESCRIPTION | SPC | TYPE OF MODEL | | ITC | COL | GRP | REMARKS |
|---|---|---|---|---|---|---|---|---|---|
| | | | | SF225F | SF237F | | | | |
| 1 | 1672-105-210-10 | FILTER/FUEL ASSY | * | 1 | | | | | FIG 107 |
| 2 | V201-260-806-50 | BOLT/M8X65 | * | 1 | | | | | |
| 3 | V401-160-008-00 | WASHER,SP/M8 | * | 1 | | | | | |
| 4 | V411-260-008-00 | WASHER,PL/M8 | * | 1 | | | | | |
| 5 | 1771-105-001-10 | HOSE/08X13X600 | * | 1 | | | | | |
| 6 | J062-119-126-00 | CLIP/HOSE/11.9-12.6 | * | 2 | | | | | |
| 7 | 1716-105-001-00 | HOSE/08X13X300 | * | 1 | | | | | |
| 8 | J062-119-126-00 | CLIP/HOSE/11.9-12.6 | * | 2 | | | | | |
| 9 | 3829-311-200-10 | PUMP/FUEL ASSY | * | 1 | | | | | |
| 10 | V360-260-006-00 | NUT/WASHER/M6 | * | 2 | | | | | |
| 11 | 1725-105-330-10 | HOSE/07X12X1250 ASSY | * | 1 -978 | | | | | |
| 11A | 1725-105-330-20 | HOSE/08X12X1250 ASSY | * | 1 979- | | 1 | | | |
| 12 | J062-111-120-00 | CLIP/HOSE/11.1-12.0 | * | 2 | | | | | |
| 13 | 1832-105-002-10 | HOSE/FUEL/2250 ASSY | * | 1 | | | | | |
| 14 | J062-087-093-00 | CLIP/HOSE/8.7-9.3 | * | 2 | | | | | |
| 15 | 1832-105-001-00 | GUARD/HOSE | * | 1 | | | | | |
| 16 | 3666-202-005-10 | PAD/50 | * | 1 | | | | | |
| 17 | V211-360-801-60 | BOLT,SP/M8X16 | * | 2 | | | | | |

# FIG. 11 PIPING(FUEL)SYSTEM(237F)

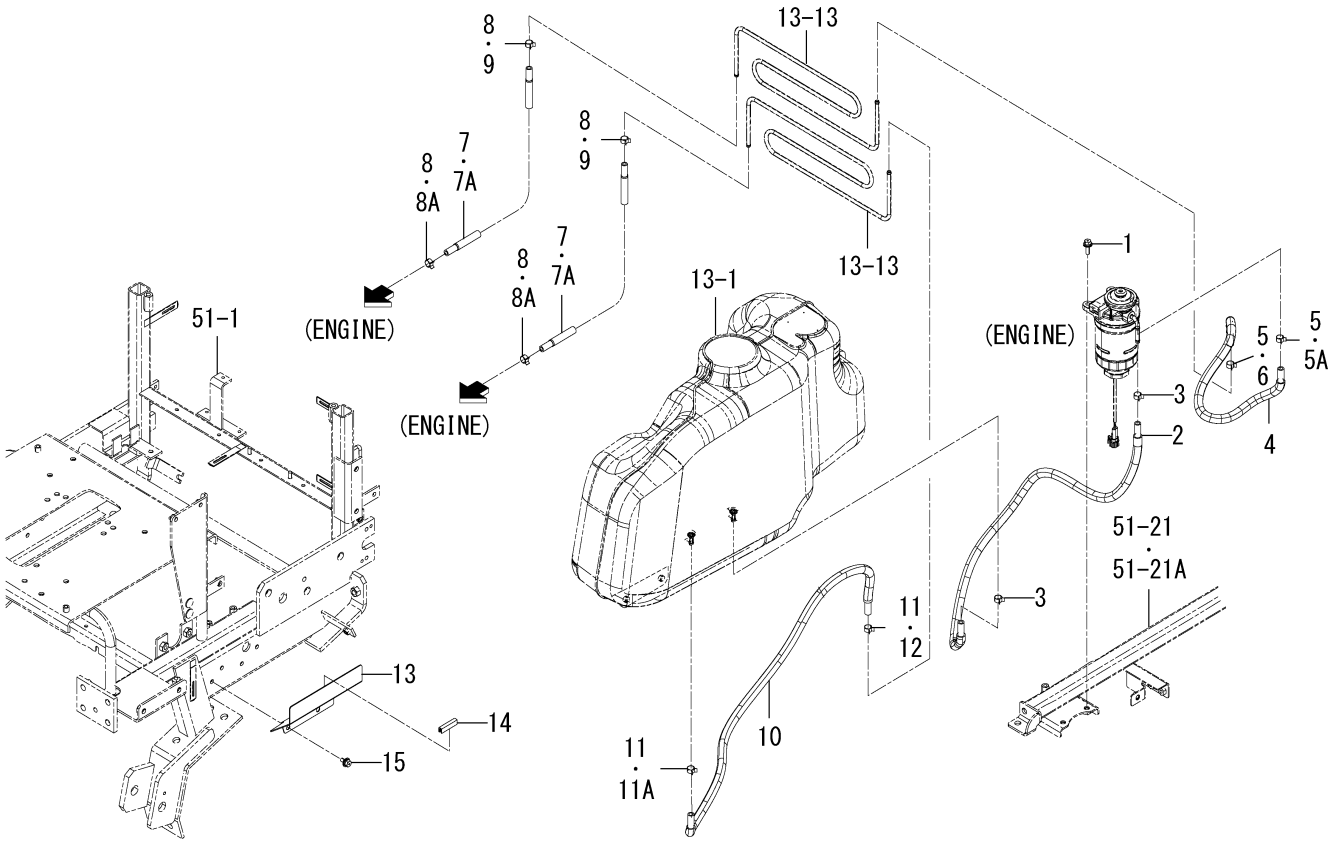


1832-105A-0100

| KEY | PART CODE | DESCRIPTION | SPC | TYPE OF MODEL | | ITC | COL | GRP | REMARKS |
|---|---|---|---|---|---|---|---|---|---|
| | | | | SF225F | SF237F | | | | |
| 1 | V211-360-802-50 | BOLT,SP/M8X25 | * | | 2 | | | | |
| 2 | 1832-105-610-00 | HOSE/FUEL/850 ASSY | * | | 1 | | | | |
| 3 | J062-126-134-00 | CLIP/HOSE/12.6-13.4 | * | | 2 | | | | |
| 4 | 1832-105-620-00 | HOSE/FUEL/550 ASSY | * | | 1 | | | | |
| 5 | J062-126-134-00 | CLIP/HOSE/12.6-13.4 | * | | 2 -636 | | | | |
| 5A | J062-126-134-00 | CLIP/HOSE/12.6-13.4 | * | | 1 637- | | | | |
| 6 | J062-119-126-00 | CLIP/HOSE/11.9-12.6 | * | | 1 637- | | | | |
| 7 | 1816-111-650-00 | HOSE/FUEL/1050 ASSY | * | | 2 -433 | | | | |
| 7A | 1848-105-270-00 | HOSE/FUEL/1050 ASSY | * | | 2 434- | | | | |
| 8 | J062-126-134-00 | CLIP/HOSE/12.6-13.4 | * | | 4 -636 | | | | |
| 8A | J062-126-134-00 | CLIP/HOSE/12.6-13.4 | * | | 2 637- | | | | |
| 9 | J062-119-126-00 | CLIP/HOSE/11.9-12.6 | * | | 2 637- | | | | |
| 10 | 1801-111-270-10 | HOSE/FUEL/940 ASSY | * | | 1 | | | | |
| 11 | J062-126-134-00 | CLIP/HOSE/12.6-13.4 | * | | 2 -636 | | | | |
| 11A | J062-126-134-00 | CLIP/HOSE/12.6-13.4 | * | | 1 637- | | | | |
| 12 | J062-119-126-00 | CLIP/HOSE/11.9-12.6 | * | | 1 637- | | | | |
| 13 | 1832-105-061-00 | GUARD/HOSE/237 | * | | 1 | | | | |
| 14 | 3666-202-005-10 | PAD/50 | * | | 1 | | | | |
| 15 | V211-360-801-60 | BOLT,SP/M8X16 | * | | 2 | | | | |
| | | | | | | | | | |
| | | | | | | | | | |
| | | | | | | | | | |
| | | | | | | | | | |
| | | | | | | | | | |
| | | | | | | | | | |
| | | | | | | | | | |
| | | | | | | | | | |
| | | | | | | | | | |
| | | | | | | | | | |
| | | | | | | | | | |

# FIG. 12 TANK(FUEL)SYSTEM(225F)

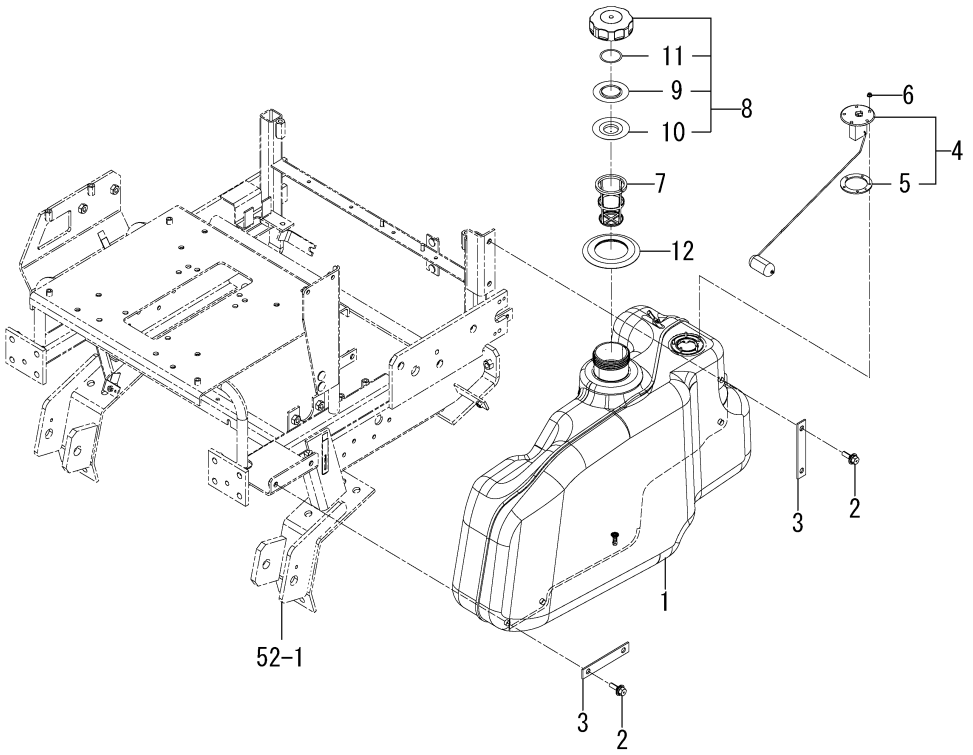


1832-111 -0100

| KEY | PART CODE | DESCRIPTION | SPC | TYPE OF MODEL | | ITC | COL | GRP | REMARKS |
|---|---|---|---|---|---|---|---|---|---|
| | | | | SF225F | SF237F | | | | |
| 1 | 1832-111-001-00 | TANK/FUEL | * | 1 | | | | | |
| 2 | V211-361-003-00 | BOLT,SP/M10X30 | * | 4 | | | | | |
| 3 | 1809-111-002-00 | PLATE/I/22X130 | * | 2 | | | | | |
| 4 | 1755-111-300-00 | GAUGE/FUEL ASSY | * | 1 | | | | | |
| 5 | 1416-621-037-00 | PACKING/RUBBER | * | 1 | | | | | |
| 6 | V360-260-004-00 | NUT/WASHER/M4 | * | 5 | | | | | |
| 7 | 1729-111-006-10 | FILTER/FUEL | * | 1 | | | | | |
| 8 | 1774-111-310-10 | CAP/NONLEAK ASSY | * | 1 | | | | | |
| 9 | 1729-111-283-00 | PLATE | * | 1 | | | | | |
| 10 | 1729-111-284-00 | PACKING | * | 1 | | | | | |
| 11 | 1774-111-311-00 | PACKINGA | * | 1 | | | | | |
| 12 | 1770-111-004-00 | COVER/TANK | * | 1 | | | | | |

# FIG. 13 TANK(FUEL)SYSTEM(237F)

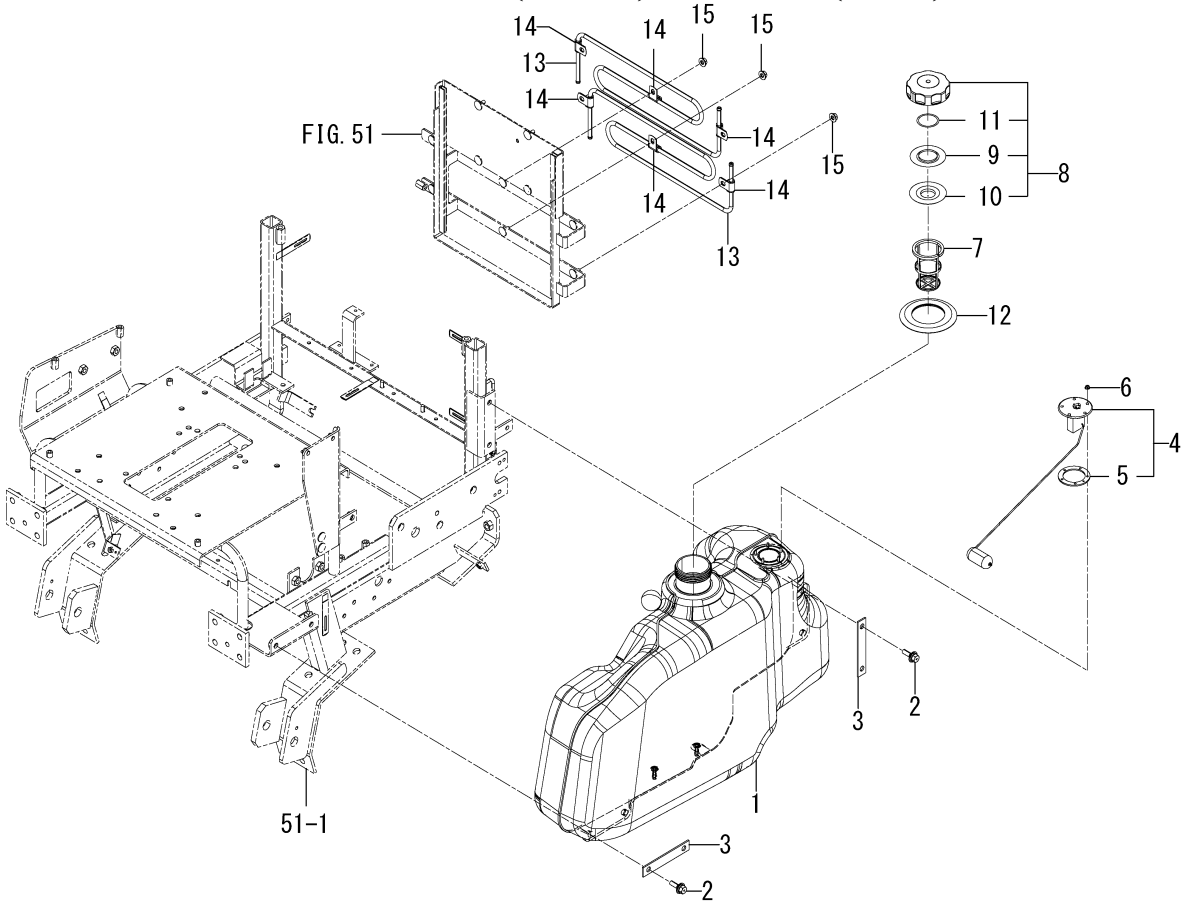


1832-111A-0100

| KEY | PART CODE | DESCRIPTION | SPC | TYPE OF MODEL | | ITC | COL | GRP | REMARKS |
|---|---|---|---|---|---|---|---|---|---|
| | | | | SF225F | SF237F | | | | |
| 1 | 1832-111-067-00 | TANK/FUEL/237 | * | | 1 | | | | |
| 2 | V211-361-003-00 | BOLT,SP/M10X30 | * | | 4 | | | | |
| 3 | 1809-111-002-00 | PLATE/I/22X130 | * | | 2 | | | | |
| 4 | 1755-111-300-00 | GAUGE/FUEL ASSY | * | | 1 | | | | |
| 5 | 1416-621-037-00 | PACKING/RUBBER | * | | 1 | | | | |
| 6 | V360-260-004-00 | NUT/WASHER/M4 | * | | 5 | | | | |
| 7 | 1729-111-006-10 | FILTER/FUEL | * | | 1 | | | | |
| 8 | 1774-111-310-10 | CAP/NONLEAK ASSY | * | | 1 | | | | |
| 9 | 1729-111-283-00 | PLATE | * | | 1 | | | | |
| 10 | 1729-111-284-00 | PACKING | * | | 1 | | | | |
| 11 | 1774-111-311-00 | PACKINGA | * | | 1 | | | | |
| 12 | 1770-111-004-00 | COVER/TANK | * | | 1 | | | | |
| 13 | 1832-111-061-00 | PIPE/FUEL | * | | 2 | | | | |
| 14 | 1690-780-001-00 | CLIP/08-09 | * | | 6 | | | | |
| 15 | V362-260-008-00 | NUT/WASHER/M8 | * | | 6 | | | | |

# FIG. 14 BATTERY SYSTEM(237F)

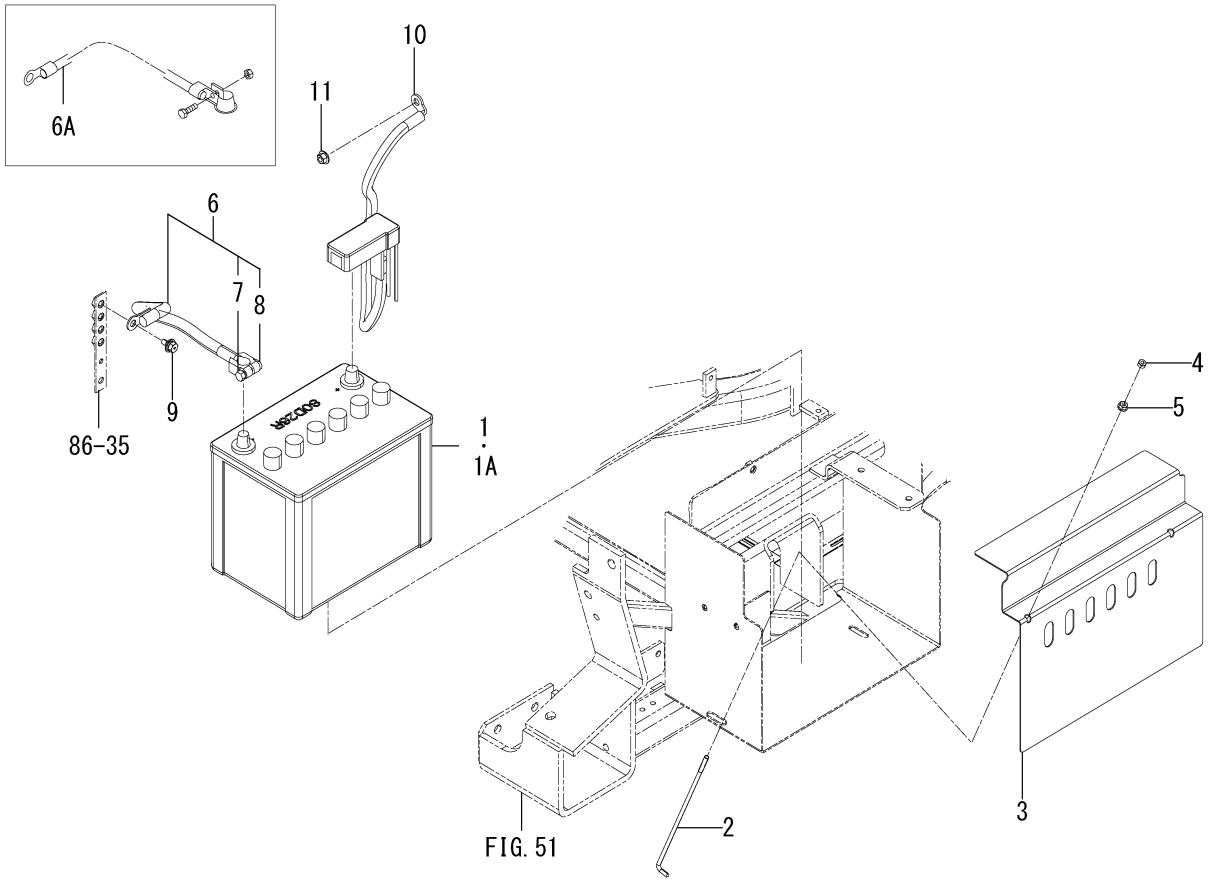


1832-112B-0100

| KEY | PART CODE | DESCRIPTION | SPC | TYPE OF MODEL | | ITC | COL | GRP | REMARKS |
|---|---|---|---|---|---|---|---|---|---|
| | | | | SF225F | SF237F | | | | |
| 1 | 1659-650-200-20 | BATTERY/80D26R ASSY | * | | 1 -1237 | | | | |
| 1A | 1659-650-200-30 | BATTERY/80D26R ASSY | * | | 1 1238- | 1 | | | |
| 2 | 1675-112-002-00 | BOLT/BATTERY | * | | 2 | | | | |
| 3 | 1832-112-061-00 | COVER/BATTERY | * | | 1 | | | | |
| 4 | V301-260-006-00 | NUT/M6 | * | | 2 | | | | |
| 5 | V360-260-006-00 | NUT/WASHER/M6 | * | | 2 | | | | |
| 6 | 1588-112-002-10 | CABLE/EARTH ASSY | * | | 1 -965 | | | | |
| 6A | 1588-112-002-20 | CABLE/EARTH ASSY | * | | 1 966- | 1 | | | |
| 7 | 1600-112-231-00 | BOLT/M06X32 | * | | 1 -965 | | | | |
| 8 | 1600-112-232-00 | NUT/M06 | * | | 1 -965 | | | | |
| 9 | V211-360-801-60 | BOLT,SP/M8X16 | * | | 1 | | | | |
| 10 | 1832-112-600-00 | CABLE/BATTERY ASSY | * | | 1 | | | | |
| 11 | V362-260-008-00 | NUT/WASHER/M8 | * | | 1 | | | | |

# FIG. 15 BATTERY SYSTEM(225F)

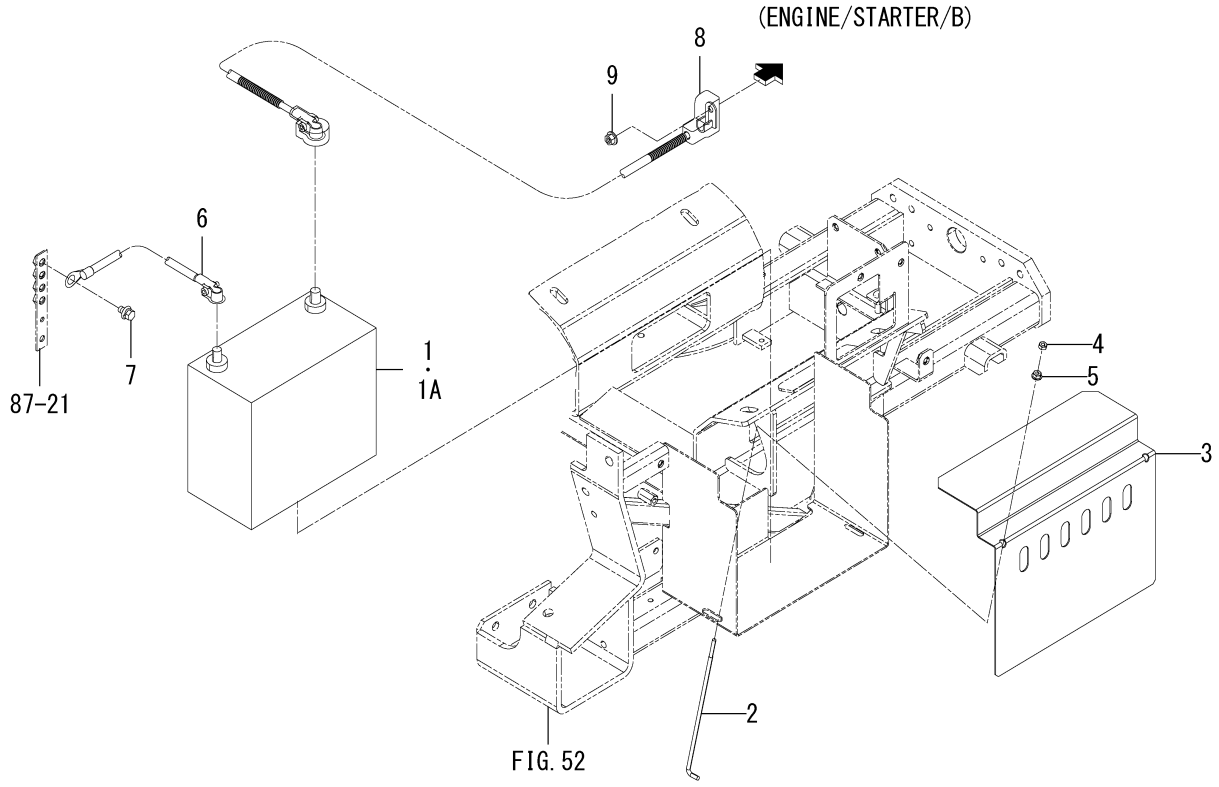


1832-112C-0100

| KEY | PART CODE | DESCRIPTION | SPC | TYPE OF MODEL | | ITC | COL | GRP | REMARKS |
|---|---|---|---|---|---|---|---|---|---|
| | | | | SF225F | SF237F | | | | |
| 1 | 1684-112-230-00 | BATTERY/55B24R ASSY | * | 1 -862 | | | | | |
| 1A | 1684-112-230-10 | BATTERY/55B24R ASSY | * | 1 863- | | 1 | | | |
| 2 | 1675-112-002-00 | BOLT/BATTERY | * | 2 | | | | | |
| 3 | 1832-112-071-00 | COVER/BATTERY | * | 1 | | | | | |
| 4 | V301-260-006-00 | NUT/M6 | * | 2 | | | | | |
| 5 | V360-260-006-00 | NUT/WASHER/M6 | * | 2 | | | | | |
| 6 | 1832-112-520-00 | CABLE/EARTH ASSY | * | 1 | | | | | |
| 7 | V211-360-801-60 | BOLT,SP/M8X16 | * | 1 | | | | | |
| 8 | 1832-112-510-00 | CABLE/BATTERY ASSY | * | 1 | | | | | |
| 9 | V362-260-008-00 | NUT/WASHER/M8 | * | 1 | | | | | |

# FIG. 16 LEVER(ACCELERATOR)SYSTEM(225F)

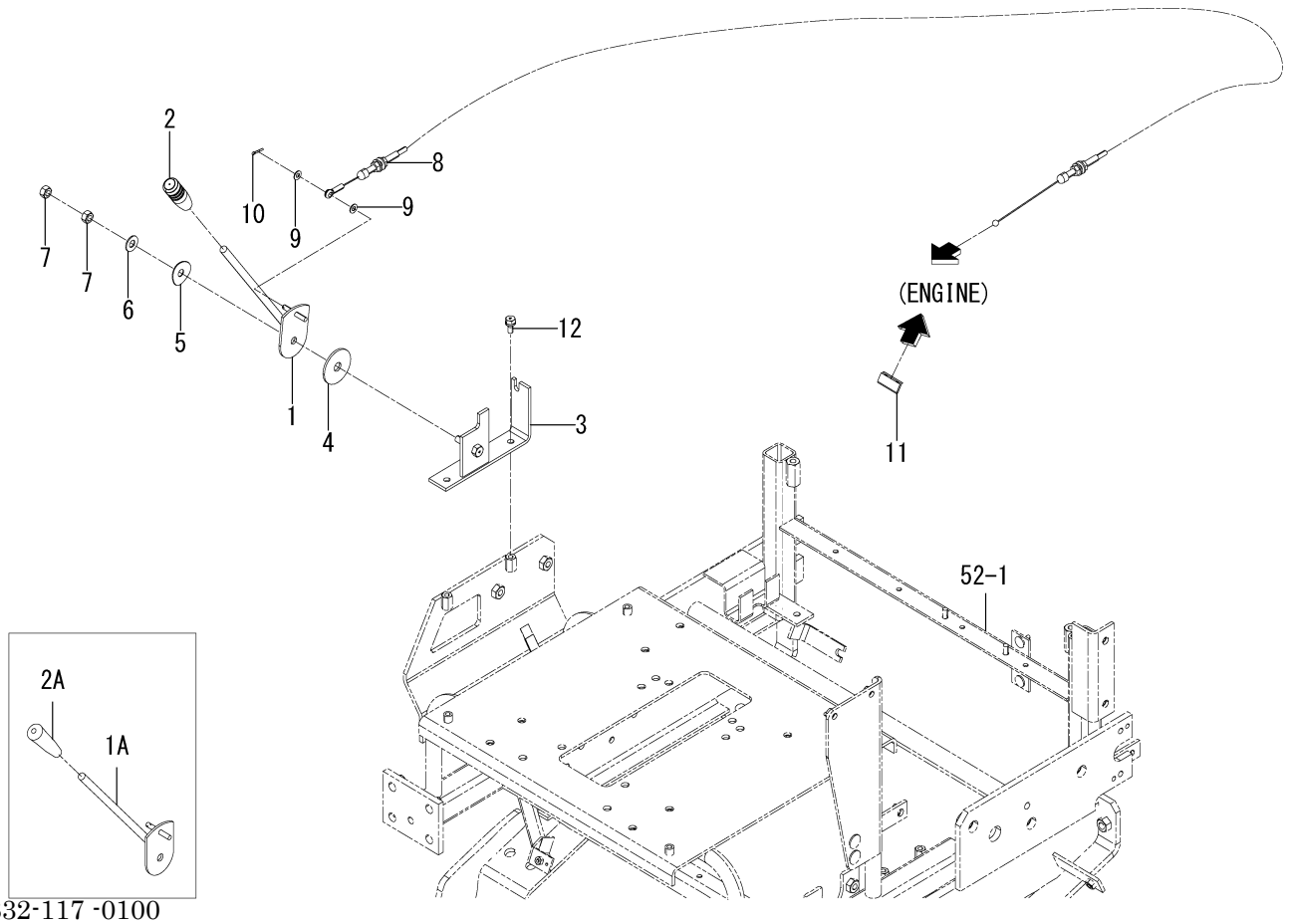


1832-117 -0100

| KEY | PART CODE | DESCRIPTION | SPC | TYPE OF MODEL | | ITC | COL | GRP | REMARKS |
|---|---|---|---|---|---|---|---|---|---|
| | | | | SF225F | SF237F | | | | |
| 1 | 1832-117-210-00 | LEVER/ACCELERATOR | * | 1 -593 | | | | | |
| 1A | 1832-117-210-10 | LEVER/ACCELERATOR | * | 1 594- | | 1 | | | |
| 2 | 1809-117-002-00 | GRIP/THROTTLE | * | 1 -593 | | | | | |
| 2A | 2173-820-003-00 | GRIP/ORANGE/10.5 | * | 1 594- | | | | | |
| 3 | 1832-117-220-00 | BRACKET/LEVER/ACCELE | * | 1 | | | | | |
| 4 | 1600-505-007-10 | LINING/13X50X03 | * | 1 | | | | | |
| 5 | 1593-117-003-10 | SPRING,DISK | * | 1 | | | | | |
| 6 | V411-260-010-00 | WASHER,PL/M10 | * | 1 | | | | | |
| 7 | V304-260-010-00 | NUT/M10 | * | 2 | | | | | |
| 8 | 1832-117-230-00 | CABLE/ACCELERATOR | * | 1 | | | | | |
| 9 | V411-260-006-00 | WASHER,PL/M6 | * | 2 | | | | | |
| 10 | V500-162-501-50 | PIN,SPLIT/2.5X15 | * | 1 | | | | | |
| 11 | 1675-116-001-00 | HOLDER | * | 1 | | | | | |
| 12 | V211-260-801-60 | BOLT,S/M8X16 | * | 2 | | | | | |

# FIG. 17 LEVER(ACCELERATOR)SYSTEM(237F)

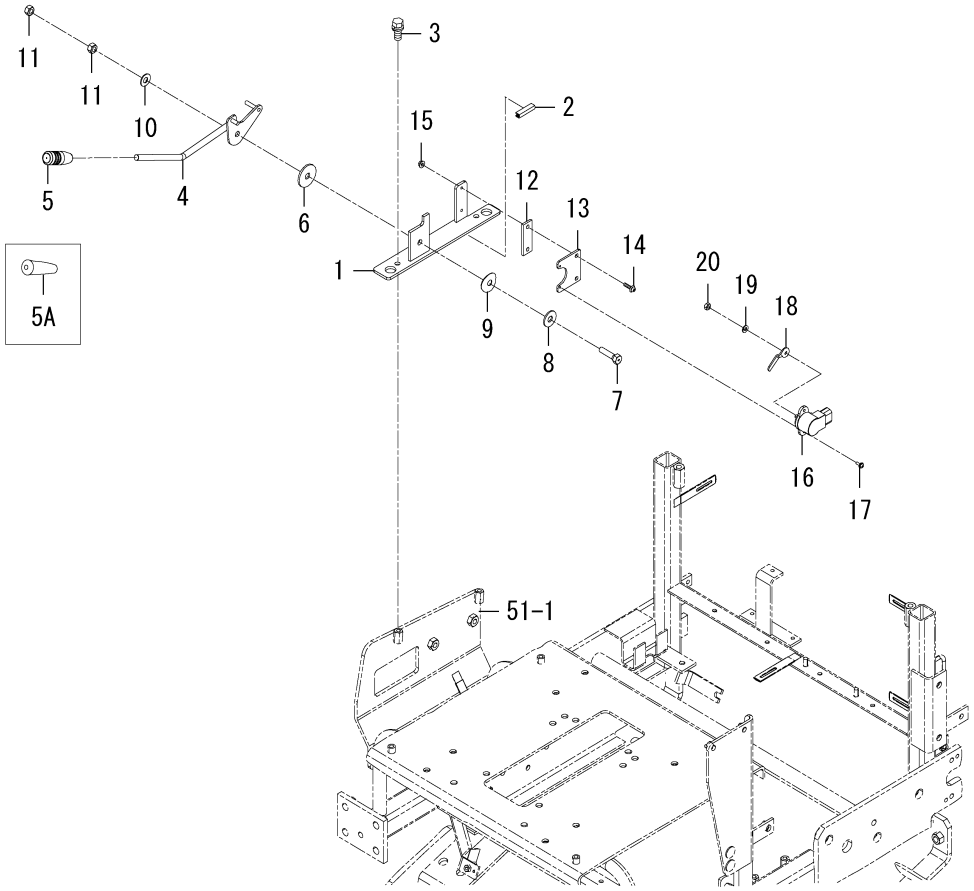


1832-117A-0100

| KEY | PART CODE | DESCRIPTION | SPC | TYPE OF MODEL | | ITC | COL | GRP | REMARKS |
|---|---|---|---|---|---|---|---|---|---|
| | | | | SF225F | SF237F | | | | |
| 1 | 1809-117-630-00 | BRACKET/THROTTL COMP | * | | 1 | | | | |
| 2 | 3666-202-005-10 | PAD/50 | * | | 1 | | | | |
| 3 | V211-260-801-60 | BOLT,S/M8X16 | * | | 2 | | | | |
| 4 | 1809-117-610-10 | LEVER/THROTTLE COMP | * | | 1 | | | | |
| 5 | 1809-117-002-00 | GRIP/THROTTLE | * | | 1 -891 | | | | |
| 5A | 2173-820-003-00 | GRIP/ORANGE/10.5 | * | | 1 892- | | | | |
| 6 | 1600-117-002-10 | LINING/11X40X03 | * | | 1 | | | | |
| 7 | V201-261-003-50 | BOLT/M10X35 | * | | 1 | | | | |
| 8 | 2130-713-002-10 | WASHER | * | | 1 | | | | |
| 9 | 1593-117-003-10 | SPRING,DISK | * | | 1 | | | | |
| 10 | V411-260-010-00 | WASHER,PL/M10 | * | | 1 | | | | |
| 11 | V304-260-010-00 | NUT/M10 | * | | 2 | | | | |
| 12 | 1809-117-063-00 | INSULATOR | * | | 1 | | | | |
| 13 | 1809-117-061-00 | STAY/SENSOR | * | | 1 | | | | |
| 14 | V120-365-002-00 | SCREW,SP/M5X20 | * | | 2 | | | | |
| 15 | V360-260-005-00 | NUT/WASHER/M5 | * | | 2 | | | | |
| 16 | 1719-505-330-00 | SENSOR/ANGLE/110/L | * | | 1 | | | | |
| 17 | V120-364-001-20 | SCREW,SP/M4X12 | * | | 2 | | | | |
| 18 | 1801-116-002-20 | ARM/SENSOR | * | | 1 | | | | |
| 19 | V401-160-006-00 | WASHER,SP/M6 | * | | 1 | | | | |
| 20 | V301-260-006-00 | NUT/M6 | * | | 1 | | | | |

# FIG. 18 CABLE(ACCELERATOR)SYSTEM(225F)

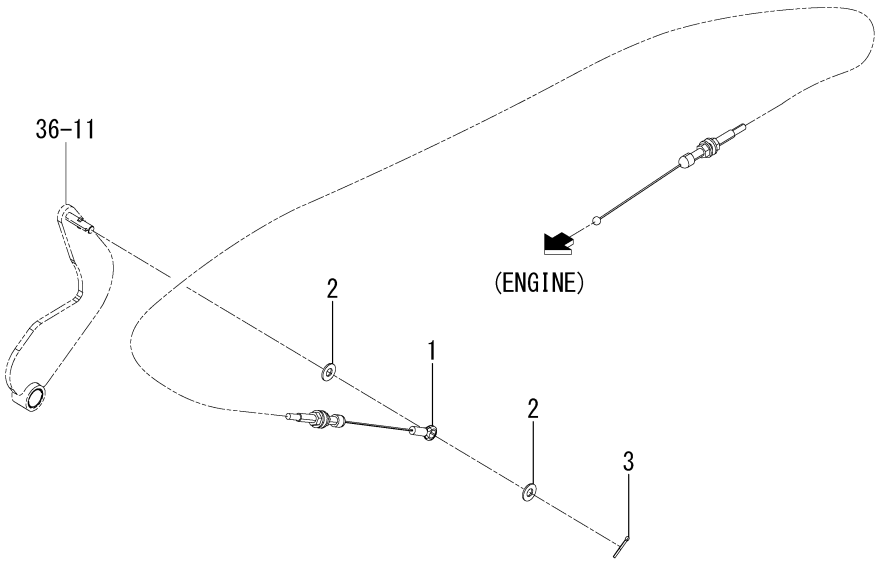


1832-118 -0100

| KEY | PART CODE | DESCRIPTION | SPC | TYPE OF MODEL | | ITC | COL | GRP | REMARKS |
|---|---|---|---|---|---|---|---|---|---|
| | | | | SF225F | SF237F | | | | |
| 1 | 1832-118-210-10 | CABLE/ACCELERATOR/AU | * | 1 | | | | | |
| 2 | V411-260-008-00 | WASHER,PL/M8 | * | 2 | | | | | |
| 3 | V500-162-502-00 | PIN,SPLIT/2.5X20 | * | 1 | | | | | |

# FIG. 19 SHAFT(INPUT)SET SYSTEM(225F)(NO.1-147)

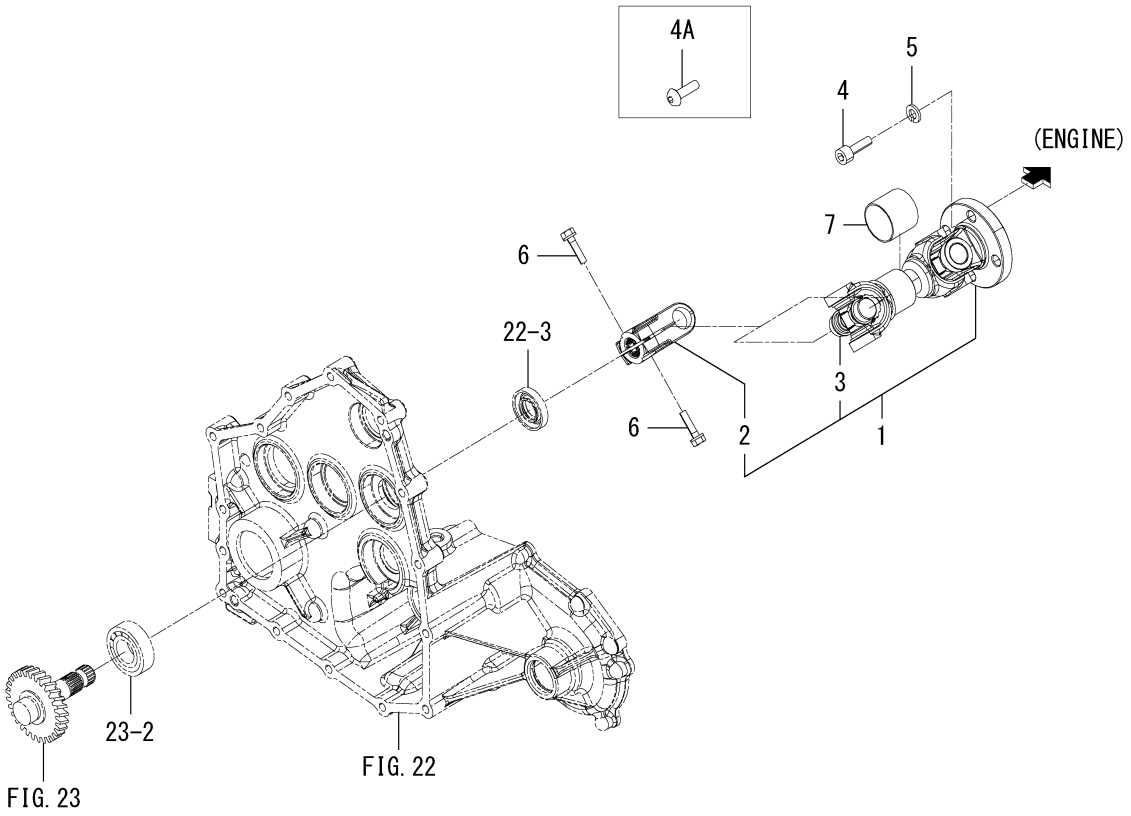


1832-120 -0100

| KEY | PART CODE | DESCRIPTION | SPC | TYPE OF MODEL | | ITC | COL | GRP | REMARKS |
|---|---|---|---|---|---|---|---|---|---|
| | | | | SF225F | SF237F | | | | |
| 1 | 1832-120-210-10 | SHAFT/INPUT SET | * | 1 -147 | | | | | |
| 2 | 1832-120-211-00 | SLIPYOKE | * | 1 -147 | | | | | |
| 3 | 1832-120-212-00 | U-JOINT ASSY | * | 1 -147 | | | | | |
| 4 | 3853-350-001-00 | BOLT/SOCKET/M10X30 | * | 4 -49 | | | | | |
| 4A | 1832-120-061-00 | BOLT/BUTTON/CAP | * | 4 -147 | | | | | |
| 5 | V401-160-010-00 | WASHER,SP/M10 | * | 4 -147 | | | | | |
| 6 | 2213-312-013-00 | BOLT/SEAL/M8X30X9T | * | 2 -147 | | | | | |
| 7 | 1832-120-064-00 | SEAL/JOINT | * | 1 -147 | | | | | |

# FIG. 20 SHAFT(INPUT)SET SYSTEM(225F-NO.148-)

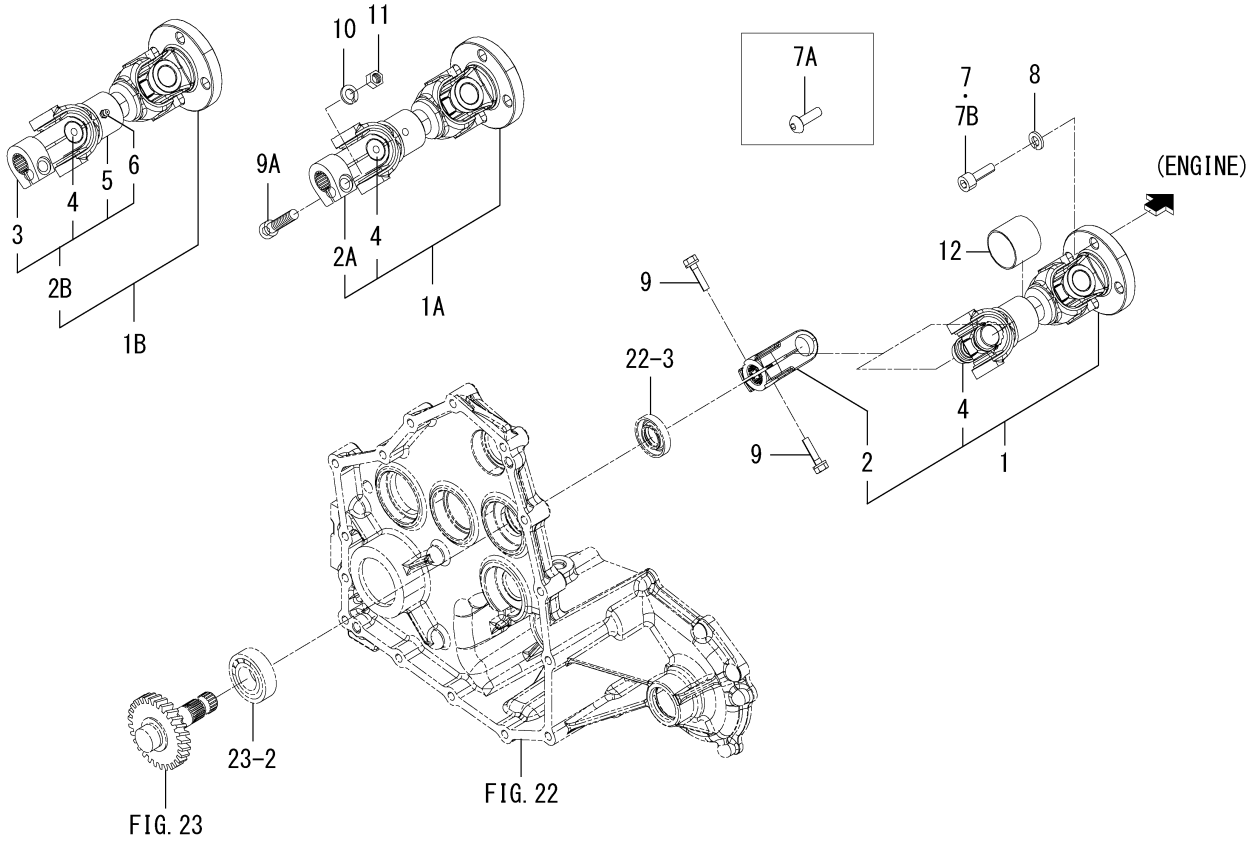


1832-120B-0100

| KEY | PART CODE | DESCRIPTION | SPC | TYPE OF MODEL | | ITC | COL | GRP | REMARKS |
|---|---|---|---|---|---|---|---|---|---|
| | | | | SF225F | SF237F | | | | |
| 1 | 1832-120-610-10 | SHAFT/INPUT/237 SET | * | | 1 -411 | | | | |
| 1A | 1832-120-610-20 | SHAFT/INPUT/237 SET | * | 1 -229 | 1 -516 | 3 | | | |
| 1B | 1832-120-610-30 | SHAFT/INPUT/237 SET | * | 1 230- | 1 517- | 1 | | | |
| 2 | 1832-120-211-00 | SLIPYOKE | * | | 1 -411 | | | | |
| 2A | 1832-120-612-00 | SLIPYOKE | * | 1 -229 | 1 -516 | | | | |
| 2B | 1832-120-620-00 | JOINT/A ASSY | * | 1 230- | 1 517- | | | | |
| 3 | 1832-120-612-10 | SLIPYOKE | * | 1 230- | 1 517- | | | | |
| 4 | 1832-120-611-00 | U-JOINT ASSY | * | 1 148- | 1 420- | | | | |
| 5 | 1832-120-623-00 | SLEEVEYOKE | * | 1 230- | 1 517- | | | | |
| 6 | 1832-120-624-00 | GREASENIPPLE | * | 2 230- | 2 517- | | | | |
| 7 | 3853-350-001-00 | BOLT/SOCKET/M10X30 | * | | 4 -350 | | | | |
| 7A | 1832-120-061-00 | BOLT/BUTTON/CAP | * | 4 -194 | 4 -492 | | | | |
| 7B | 3853-350-001-00 | BOLT/SOCKET/M10X30 | * | 4 195- 4 | 4 493- 4 | | | | |
| 8 | V401-160-010-00 | WASHER,SP/M10 | * | | | | | | |
| 9 | 2213-312-013-00 | BOLT/SEAL/M8X30X9T | * | | 2 -411 | | | | |
| 9A | 1832-120-067-00 | BOLT/SOCKET/M10X45 | * | 1 148- | 1 412- | | | | |
| 10 | V401-160-010-00 | WASHER,SP/M10 | * | 1 148- | 1 412- | | | | |
| 11 | 1635-303-005-00 | NUT/SM/M10X1.25 | * | 1 148- | 1 412- | | | | |
| 12 | 1832-120-064-00 | SEAL/JOINT | * | 1 148- | 1 388- | | | | |

# FIG. 21 CASE(TRANSMISSION)SYSTEM

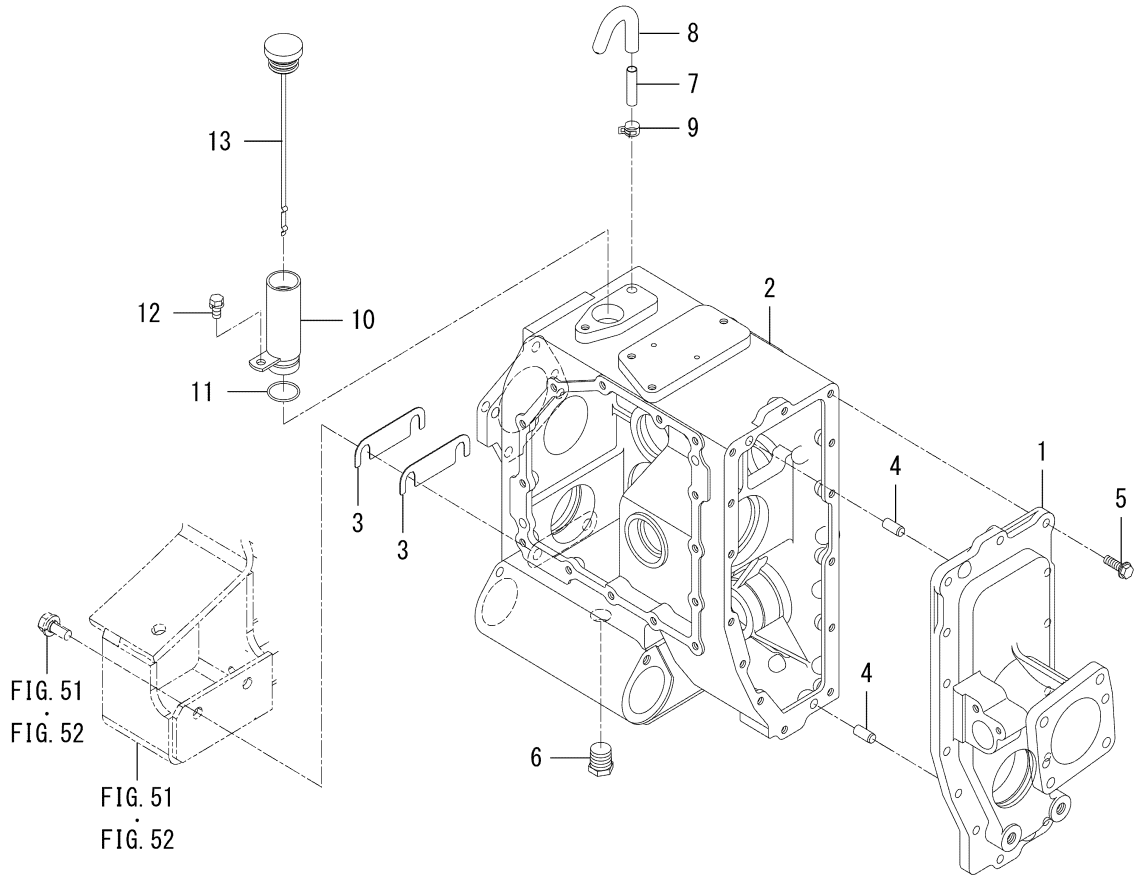


1832-201A-0100

| KEY | PART CODE | DESCRIPTION | SPC | TYPE OF MODEL | | ITC | COL | GRP | REMARKS |
|---|---|---|---|---|---|---|---|---|---|
| | | | | SF225F | SF237F | | | | |
| 1 | 1832-201-001-10 | CASE/TRANSMISSION/LH | * | 1 | 1 | | | | |
| 2 | 1832-201-002-10 | CASE/TRANSMISSION/RH | * | 1 | 1 | | | | |
| 3 | 1832-201-003-00 | SHIM/1.0 | * | 2 1030- | 2 1308- | | | | |
| 4 | V523-101-002-20 | PIN,ST,B/10X22 | * | 2 | 2 | | | | |
| 5 | V231-360-802-50 | FLANGEBOLT/M8X25 | * | 14 | 14 | | | | |
| 6 | V782-160-000-8B | PLUG/SCREW/SEAL | * | 1 | 1 | | | | |
| 7 | 1544-120-008-10 | PIPE,BREATHER | * | 1 | 1 | | | | |
| 8 | 1716-501-006-10 | HOSE/BREATHER | * | 1 | 1 | | | | |
| 9 | J062-138-148-00 | CLIP/HOSE/13.8-14.8 | * | 1 | 1 | | | | |
| 10 | 1832-201-600-00 | PIPE/FILLER/OIL COMP | * | 1 | 1 | | | | |
| 11 | V723-102-002-90 | O-RING/1A,S29 | * | 1 | 1 | | | | |
| 12 | V211-260-801-60 | BOLT,S/M8X16 | * | 1 | 1 | | | | |
| 13 | 1575-306-004-00 | GAUGE,OIL | * | 1 | 1 | | | | |

# FIG. 22 METAL(HST)SYSTEM

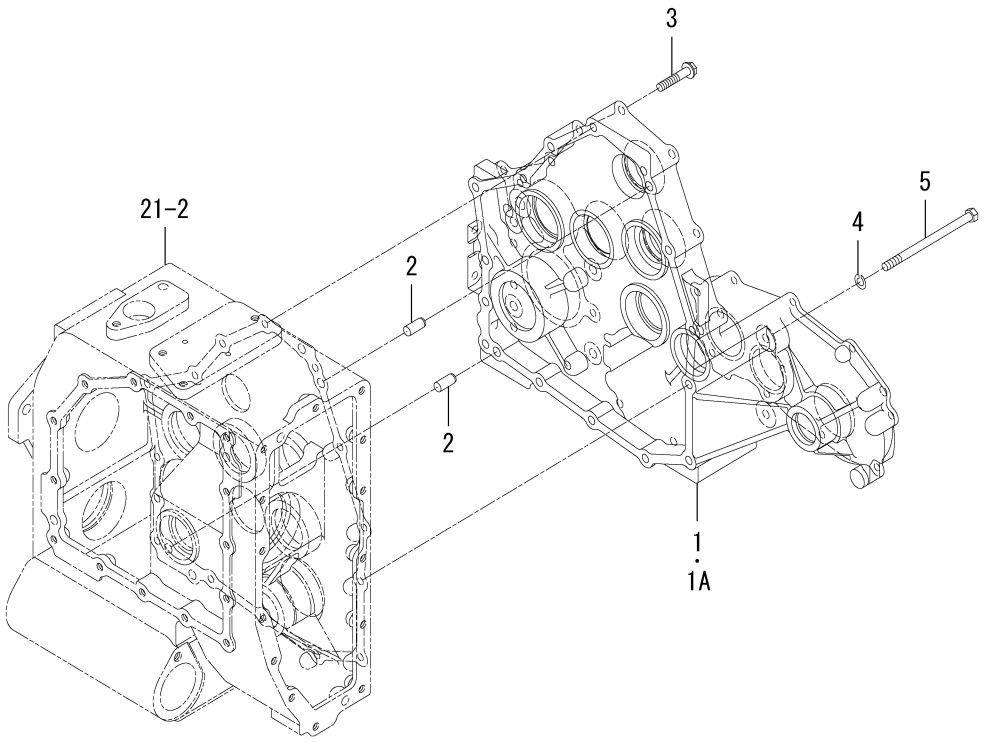


1832-203 -0100

| KEY | PART CODE | DESCRIPTION | SPC | TYPE OF MODEL | | ITC | COL | GRP | REMARKS |
|---|---|---|---|---|---|---|---|---|---|
| | | | | SF225F | SF237F | | | | |
| 1 | 1832-203-001-00 | METAL/HST | * | 1 -91 | 1 -380 | | | | |
| 1A | 1832-203-001-10 | METAL/HST | * | 1 92- | 1 381- | 1 | | | |
| 2 | V523-101-002-20 | PIN,ST,B/10X22 | * | 2 | 2 | | | | |
| 3 | V231-360-804-00 | FLANGEBOLT/M8X40 | * | 13 | 13 | | | | |
| 4 | V401-160-008-00 | WASHER,SP/M8 | * | 2 | 2 | | | | |
| 5 | V201-360-812-00 | BOLT/M8X120/7T | * | 2 | 2 | | | | |

# FIG. 23 GEAR(INPUT)SYSTEM

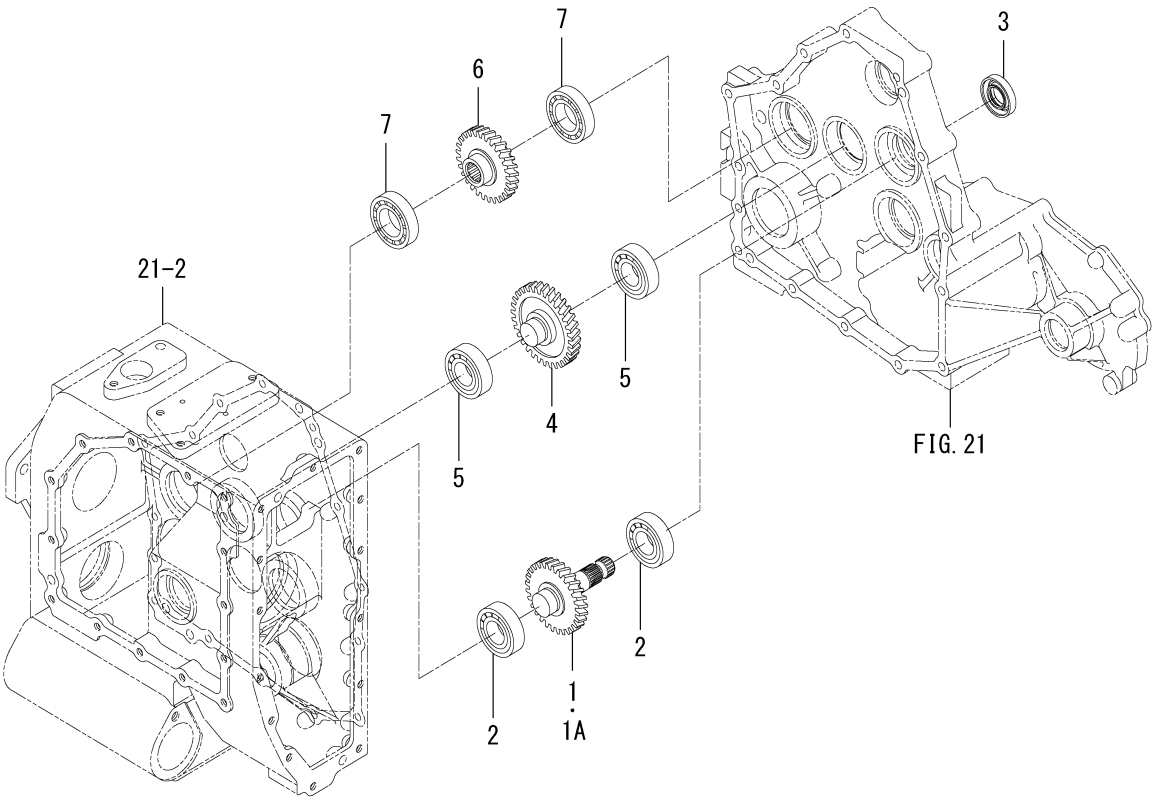


1832-204 -0100

| KEY | PART CODE | DESCRIPTION | SPC | TYPE OF MODEL | | ITC | COL | GRP | REMARKS |
|---|---|---|---|---|---|---|---|---|---|
| | | | | SF225F | SF237F | | | | |
| 1 | 1832-204-001-00 | GEAR/HELICAL/28 | * | 1 -106 | 1 -397 | | | | |
| 1A | 1832-204-001-10 | GEAR/HELICAL/28 | * | 1 107- | 1 398- | 1 | | | |
| 2 | V600-110-620-50 | BEARING,RB/6205 | * | 2 | 2 | | | | |
| 3 | V744-120-420-80 | SEAL,OIL/TC20428 | * | 1 | 1 | | | | |
| 4 | 1832-204-002-00 | GEAR/HELICAL/31 | * | 1 | 1 | | | | |
| 5 | V600-110-620-50 | BEARING,RB/6205 | * | 2 | 2 | | | | |
| 6 | 1832-204-003-00 | GEAR/HELICAL/28 | * | 1 | 1 | | | | |
| 7 | V600-110-600-60 | BEARING,RB/6006 | * | 2 | 2 | | | | |

# FIG. 24 HST SYSTEM

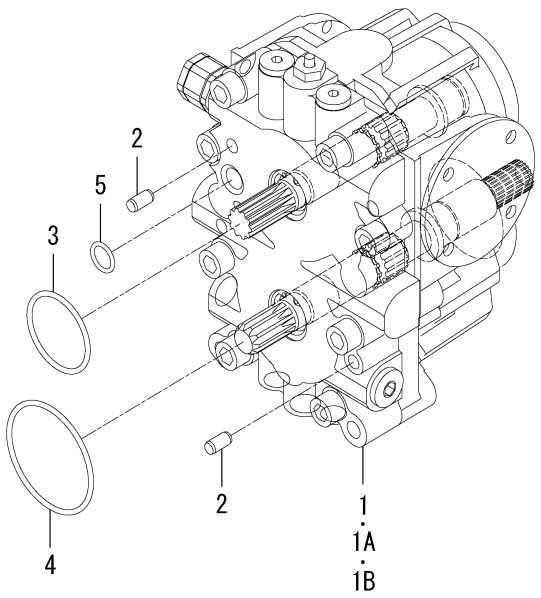


1832-212 -0100

| KEY | PART CODE | DESCRIPTION | SPC | TYPE OF MODEL | | ITC | COL | GRP | REMARKS |
|---|---|---|---|---|---|---|---|---|---|
| | | | | SF225F | SF237F | | | | |
| 1 | K500-008-000-20 | HST/SFH/23 ASSY | * | 1 -240 | 1 -525 | | | | FIG 106 |
| 1A | K500-008-000-30 | HST/SFH/23 ASSY | * | 1 -343 | 1 -560 | 1 | | | FIG 106 |
| 1B | K500-008-000-40 | HST/SFH/23 ASSY | * | 1 344- | 1 561- | 1 | | | FIG 106 |
| 2 | V523-100-801-60 | PIN,ST,B/8X16 | * | 2 | 2 | | | | |
| 3 | V721-103-105-00 | O-RING/1A,G50 | * | 1 | 1 | | | | |
| 4 | V721-103-107-00 | O-RING/1A,G70 | * | 1 | 1 | | | | |
| 5 | V720-112-401-50 | O-RING/1B,P15 | * | 1 | 1 | | | | |

# FIG. 25 GEAR(INPUT)SET SYSTEM

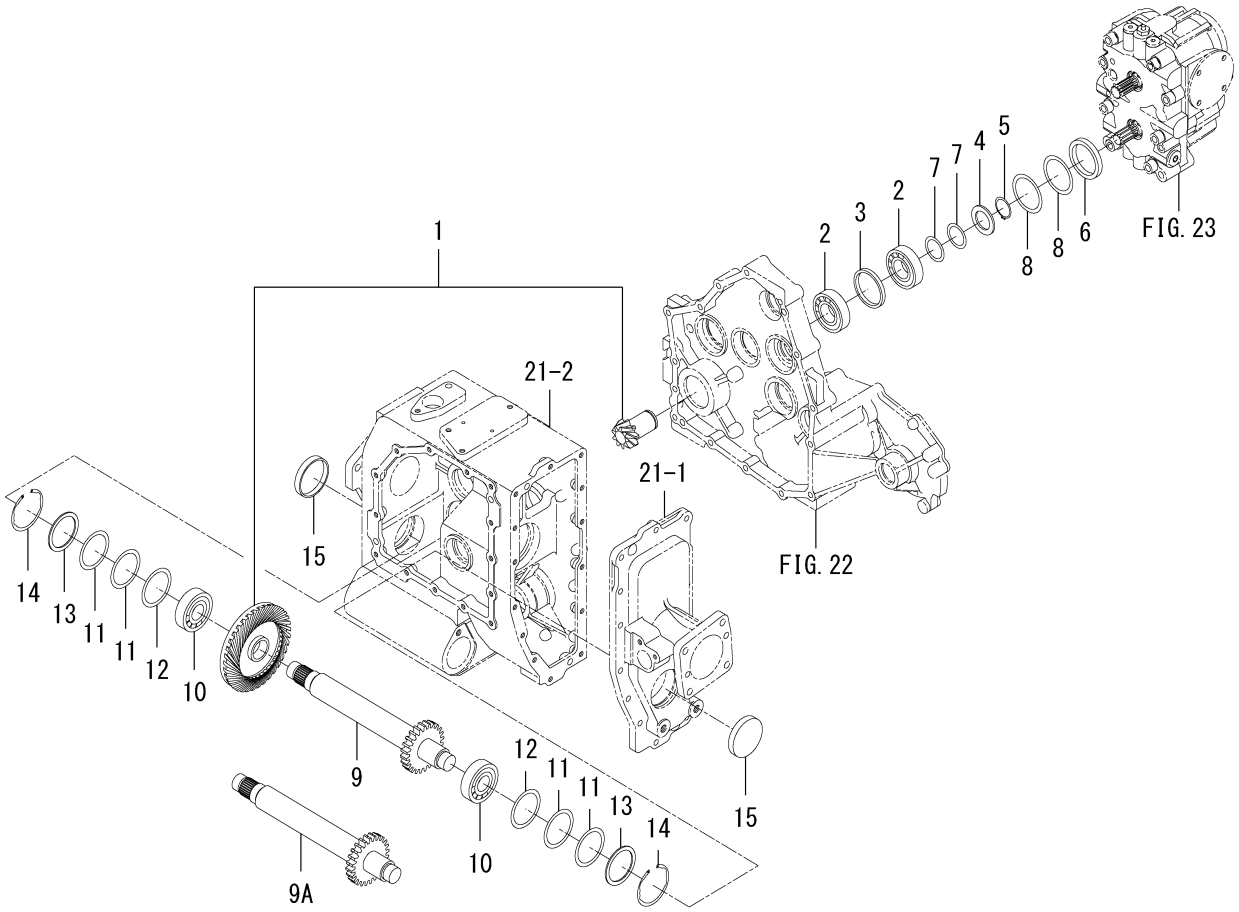


1832-213 -0100

| KEY | PART CODE | DESCRIPTION | SPC | TYPE OF MODEL | | ITC | COL | GRP | REMARKS |
|---|---|---|---|---|---|---|---|---|---|
| | | | | SF225F | SF237F | | | | |
| 1 | 1832-213-900-00 | GEAR/INPUT SET | * | 1 | 1 | | | | |
| 2 | 1614-203-015-00 | BEARING/BALL | * | 2 | 2 | | | | |
| 3 | 1832-213-002-00 | COLLAR/53X61X06 | * | 1 | 1 | | | | |
| 4 | 1564-216-004-10 | WASHER/30X46X03 | * | 1 | 1 | | | | |
| 5 | V704-140-030-00 | RING,SNAP/30 C | * | 1 | 1 | | | | |
| 6 | 1832-213-001-00 | COLLAR/50X62X08 | * | 1 | 1 | | | | |
| 7 | 3817-116-005-00 | SHIM | * | 2 | 2 | | | | |
| 8 | 8663-201-005-00 | SHIM/0.2 | * | 2 | 2 | | | | |
| 9 | 1832-213-210-00 | GEAR/SPUR/24 COMP | * | 1 -752 | 1 -1104 | | | | |
| 9A | 1832-213-210-10 | GEAR/SPUR/24 COMP | * | 1 753- | 1 1105- | 1 | | | |
| 10 | V600-110-630-50 | BEARING,RB/6305 | * | 2 | 2 | | | | |
| 11 | 8663-201-004-00 | SHIM/0.1 | * | 4 | 4 | | | | |
| 12 | 8663-201-005-00 | SHIM/0.2 | * | 2 | 2 | | | | |
| 13 | 1724-304-005-00 | WASHER/50X62X02 | * | 2 | 2 | | | | |
| 14 | V707-140-062-00 | RING,SNAP/R62 | * | 2 | 2 | | | | |
| 15 | 1444-314-008-00 | SEAL(62) | * | 2 | 2 | | | | |

# FIG. 26 CASE(DIFFERENTIAL)SYSTEM

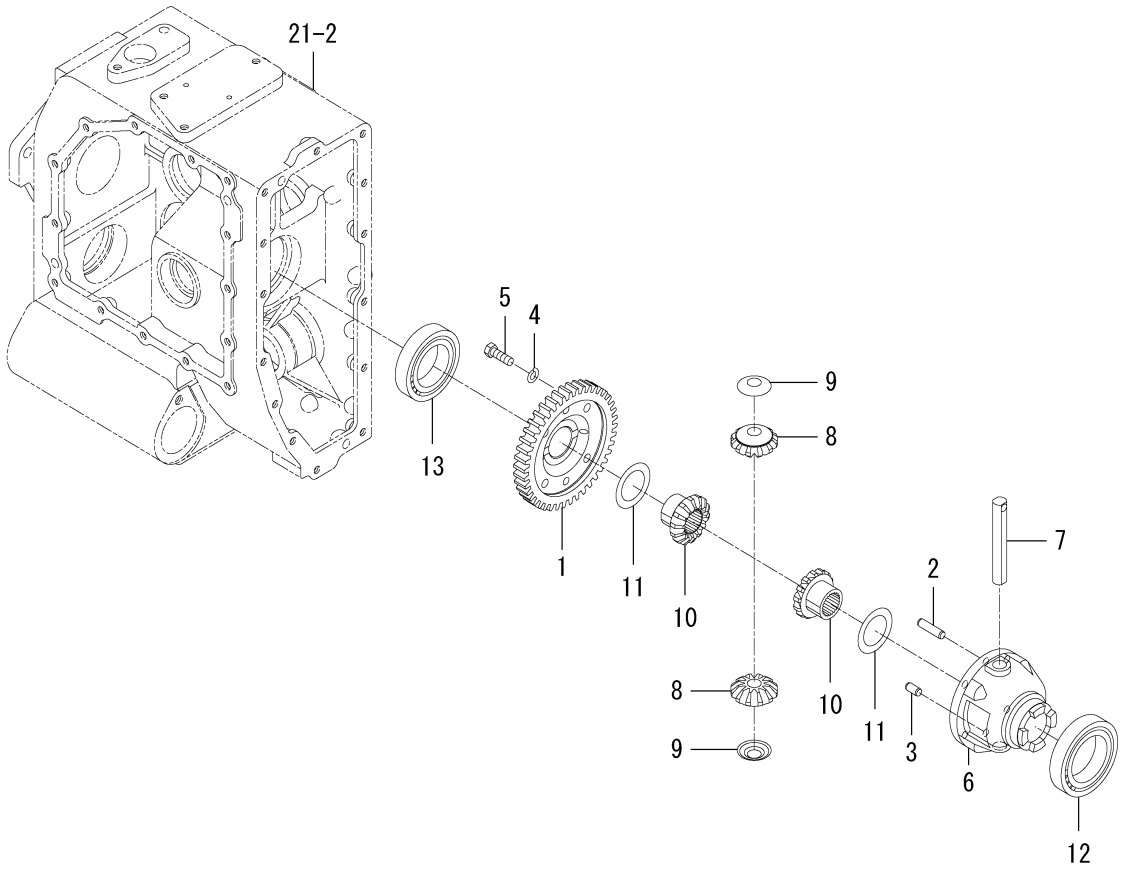


1832-214 -0100

| KEY | PART CODE | DESCRIPTION | SPC | TYPE OF MODEL | | ITC | COL | GRP | REMARKS |
|---|---|---|---|---|---|---|---|---|---|
| | | | | SF225F | SF237F | | | | |
| 1 | 1832-214-001-00 | GEAR/SPUR/42 | * | 1 | 1 | | | | |
| 2 | 1672-301-002-00 | PIN/PARALLEL/08X32 | * | 1 | 1 | | | | |
| 3 | V523-100-801-60 | PIN,ST,B/8X16 | * | 1 | 1 | | | | |
| 4 | V401-160-008-00 | WASHER,SP/M8 | * | 4 | 4 | | | | |
| 5 | 1544-304-006-10 | BOLT/M8X25 | * | 4 | 4 | | | | |
| 6 | 1427-301-002-20 | CASE,DIFF | * | 1 | 1 | | | | |
| 7 | 1444-411-006-00 | SHAFT,DIFF. PINION | * | 1 | 1 | | | | |
| 8 | 1672-301-003-00 | PINION/BEVEL/12 | * | 2 | 2 | | | | |
| 9 | 1802-432-001-00 | WASHER/PINION | * | 2 | 2 | | | | |
| 10 | 1672-301-004-00 | GEAR/BEVEL/14 | * | 2 | 2 | | | | |
| 11 | 1427-301-007-00 | COLLAR,THRUST | * | 2 | 2 | | | | |
| 12 | 1805-202-025-00 | BEARING/BALL/6010C | * | 1 | 1 | | | | |
| 13 | V600-110-600-90 | BEARING,RB/6009 | * | 1 | 1 | | | | |

# FIG. 27 DIFF-LOCK SYSTEM

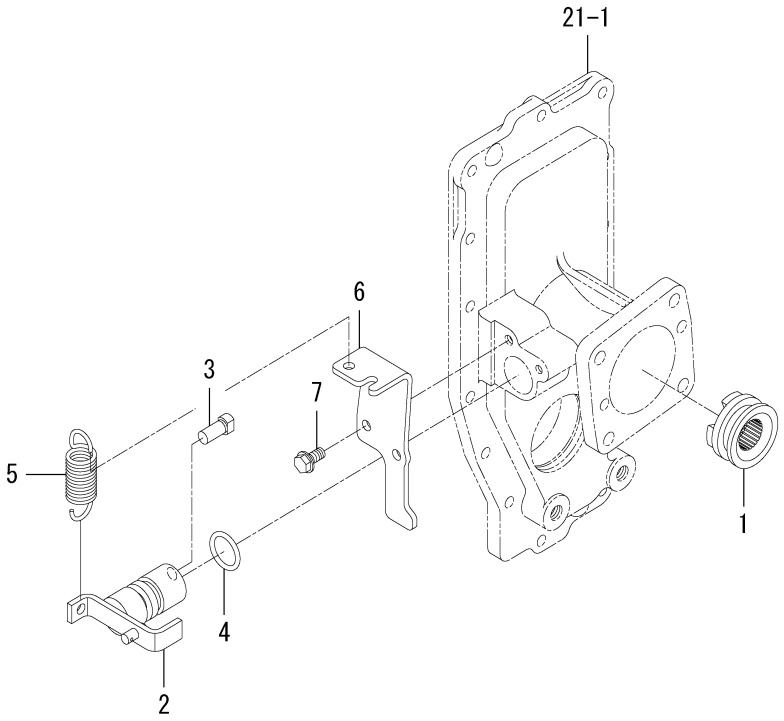


1832-215 -0100

| KEY | PART CODE | DESCRIPTION | SPC | TYPE OF MODEL | | ITC | COL | GRP | REMARKS |
|---|---|---|---|---|---|---|---|---|---|
| | | | | SF225F | SF237F | | | | |
| 1 | 1728-204-002-00 | CLUTCH/DIFFLOCK | * | 1 | 1 | | | | |
| 2 | 1771-215-210-00 | ARM/DIFF COMP | * | 1 | 1 | | | | |
| 3 | 1689-205-005-10 | PIN/10X21 | * | 1 | 1 | | | | |
| 4 | V720-103-502-40 | O-RING/1A,P24 | * | 1 | 1 | | | | |
| 5 | 1728-204-073-30 | SPRING/HE073 | * | 1 | 1 | | | | |
| 6 | 1771-215-001-10 | STAY/DEFFCABLE | * | 1 | 1 | | | | |
| 7 | V231-360-801-60 | FLANGEBOLT/M8X16 | * | 2 | 2 | | | | |

# FIG. 28 PEDAL(DIFF-LOCK)SYSTEM

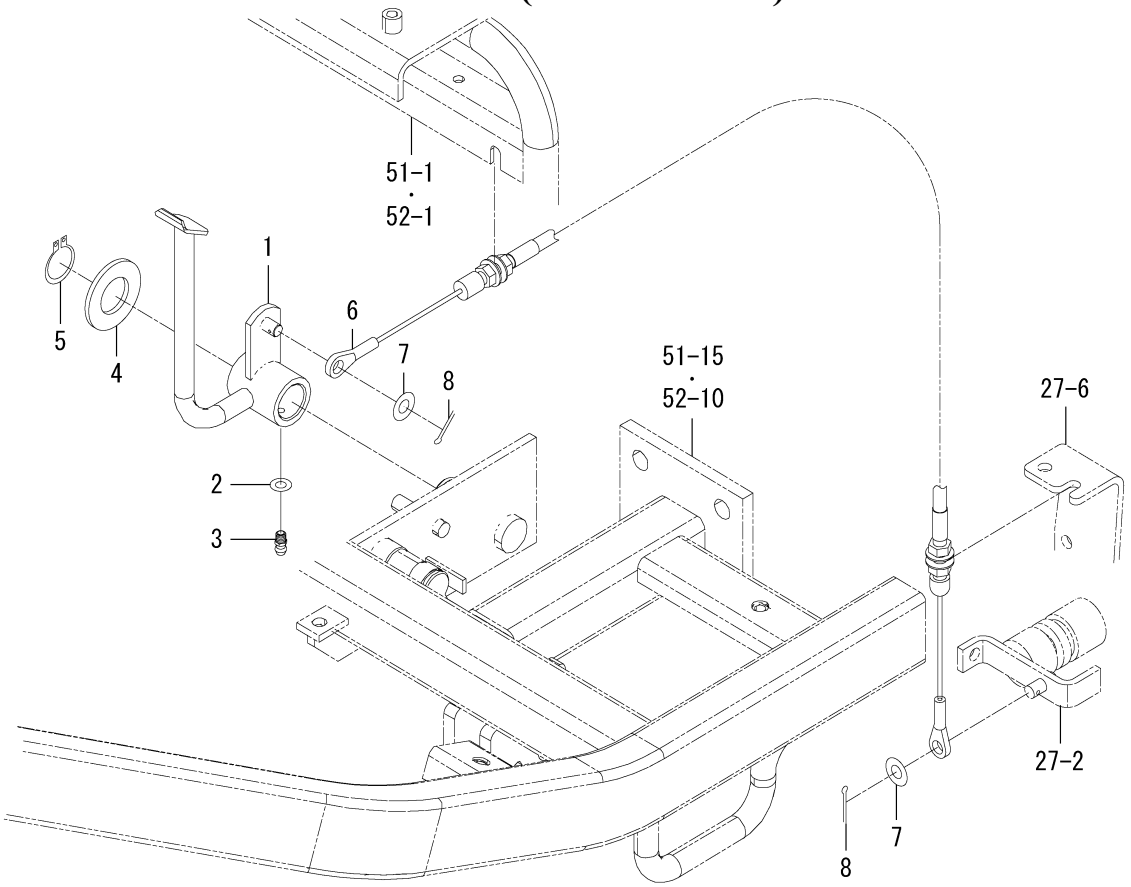


1832-216 -0100

| KEY | PART CODE | DESCRIPTION | SPC | TYPE OF MODEL | | ITC | COL | GRP | REMARKS |
|---|---|---|---|---|---|---|---|---|---|
| | | | | SF225F | SF237F | | | | |
| 1 | 1832-216-210-10 | PEDAL/DIFF COMP | * | 1 | 1 | | | | |
| 2 | V411-260-006-00 | WASHER,PL/M6 | * | 1 | 1 | | | | |
| 3 | V760-150-000-00 | NIPPLE,GREASE | * | 1 | 1 | | | | |
| 4 | V411-260-022-00 | WASHER,PL/M22 | * | 1 | 1 | | | | |
| 5 | V704-140-022-00 | RING,SNAP/22 C | * | 1 | 1 | | | | |
| 6 | 1832-216-220-00 | CABLE/DIFF ASSY | * | 1 | 1 | | | | |
| 7 | V411-260-008-00 | WASHER,PL/M8 | * | 2 | 2 | | | | |
| 8 | V500-162-502-00 | PIN,SPLIT/2.5X20 | * | 2 | 2 | | | | |

# FIG. 29 HST SYSTEM

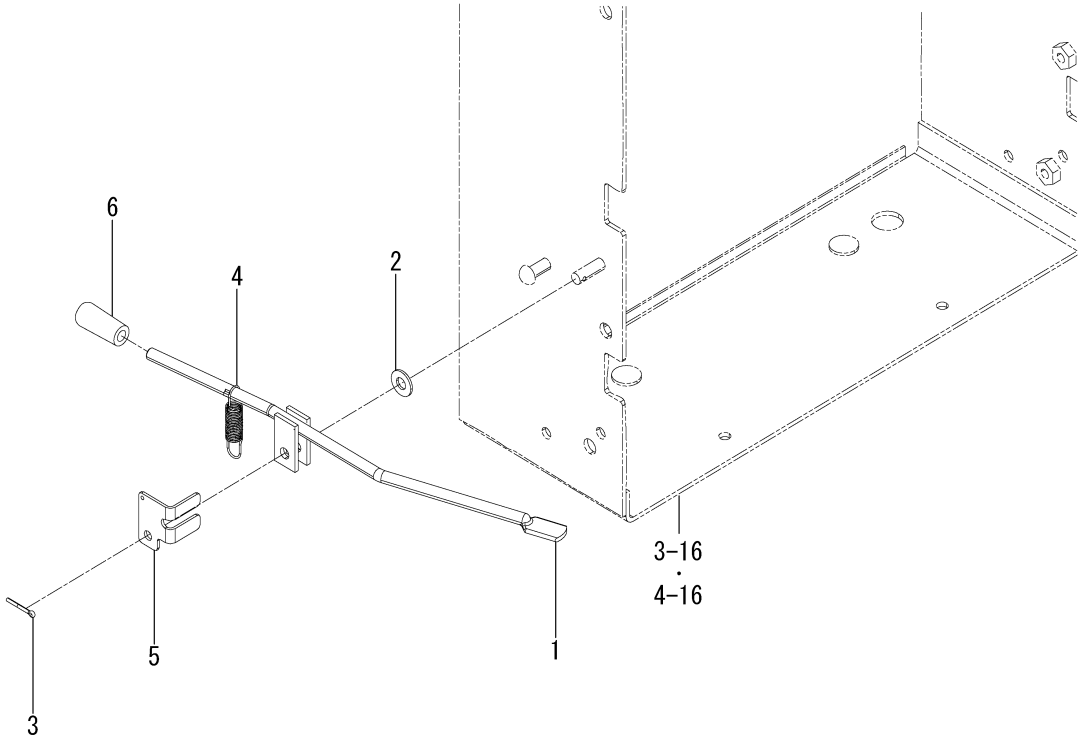


1832-218A-0100

| KEY | PART CODE | DESCRIPTION | SPC | TYPE OF MODEL | | ITC | COL | GRP | REMARKS |
|---|---|---|---|---|---|---|---|---|---|
| | | | | SF225F | SF237F | | | | |
| 1 | 1832-218-610-00 | LEVER/UNLOAD COMP | * | 1 | 1 | | | | |
| 2 | V411-260-008-00 | WASHER,PL/M8 | * | 1 | 1 | | | | |
| 3 | V500-162-502-00 | PIN,SPLIT/2.5X20 | * | 1 | 1 | | | | |
| 4 | 1776-505-004-00 | SPRING/HE053 | * | 1 | 1 | | | | |
| 5 | 1832-218-061-00 | PLATE/UNLOAD | * | 1 | 1 | | | | |
| 6 | 1742-313-001-10 | GRIP/07X34/OR | * | 1 | 1 | | | | |

# FIG. 30 METAL(PTO/BLOWER)SYSTEM(B TYPE)

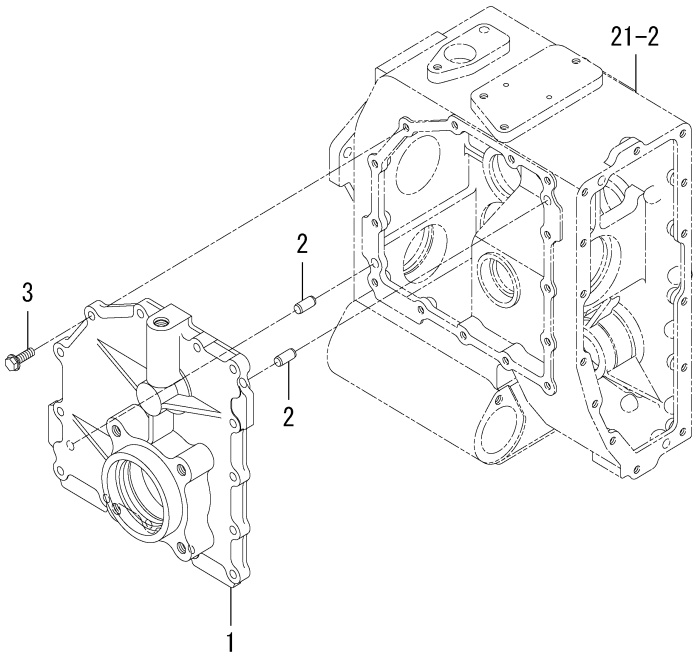


1832-241 -0100

| KEY | PART CODE | DESCRIPTION | SPC | TYPE OF MODEL | | ITC | COL | GRP | REMARKS |
|---|---|---|---|---|---|---|---|---|---|
| | | | | SF225F | SF237F | | | | |
| 1 | 1832-241-001-00 | METAL/PTO/BLOWER | * | 1 | 1 | | | | |
| 2 | V523-101-002-20 | PIN,ST,B/10X22 | * | 2 | 2 | | | | |
| 3 | V231-360-802-50 | FLANGEBOLT/M8X25 | * | 14 | 14 | | | | |

# FIG. 31 METAL(PTO/BLOWER)SYSTEM(EXCEPT B TYPE)

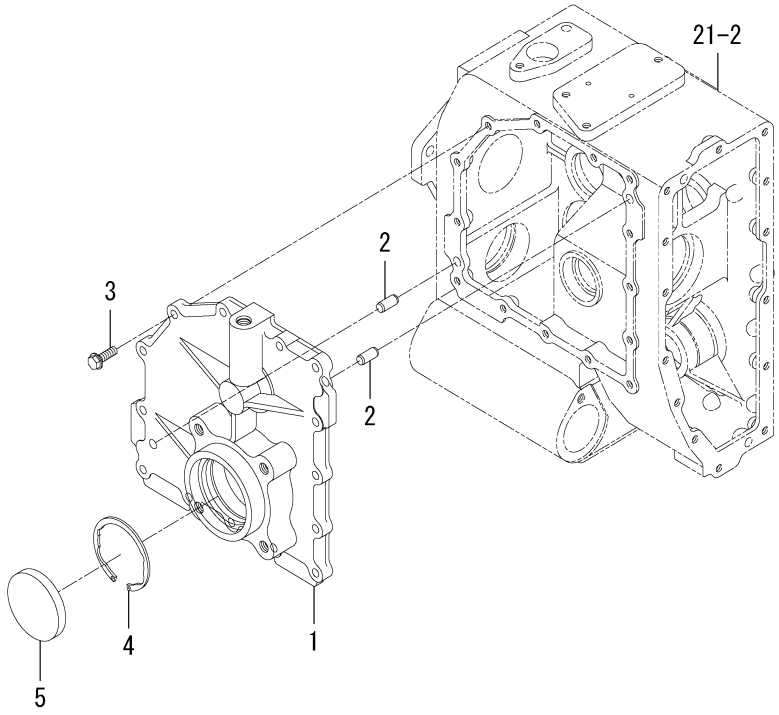


1832-241B-0100

| KEY | PART CODE | DESCRIPTION | SPC | TYPE OF MODEL | | ITC | COL | GRP | REMARKS |
|---|---|---|---|---|---|---|---|---|---|
| | | | | SF225F | SF237F | | | | |
| 1 | 1832-241-001-00 | METAL/PTO/BLOWER | * | 1 | 1 | | | | |
| 2 | V523-101-002-20 | PIN,ST,B/10X22 | * | 2 | 2 | | | | |
| 3 | V231-360-802-50 | FLANGEBOLT/M8X25 | * | 14 | 14 | | | | |
| 4 | V707-140-072-00 | RING,SNAP/R72 | * | 1 | 1 | | | | |
| 5 | 1425-433-018-00 | CAP,BLANK/72 | * | 1 | 1 | | | | |

# FIG. 32 DRIVE(PTO/SIDE)SYSTEM

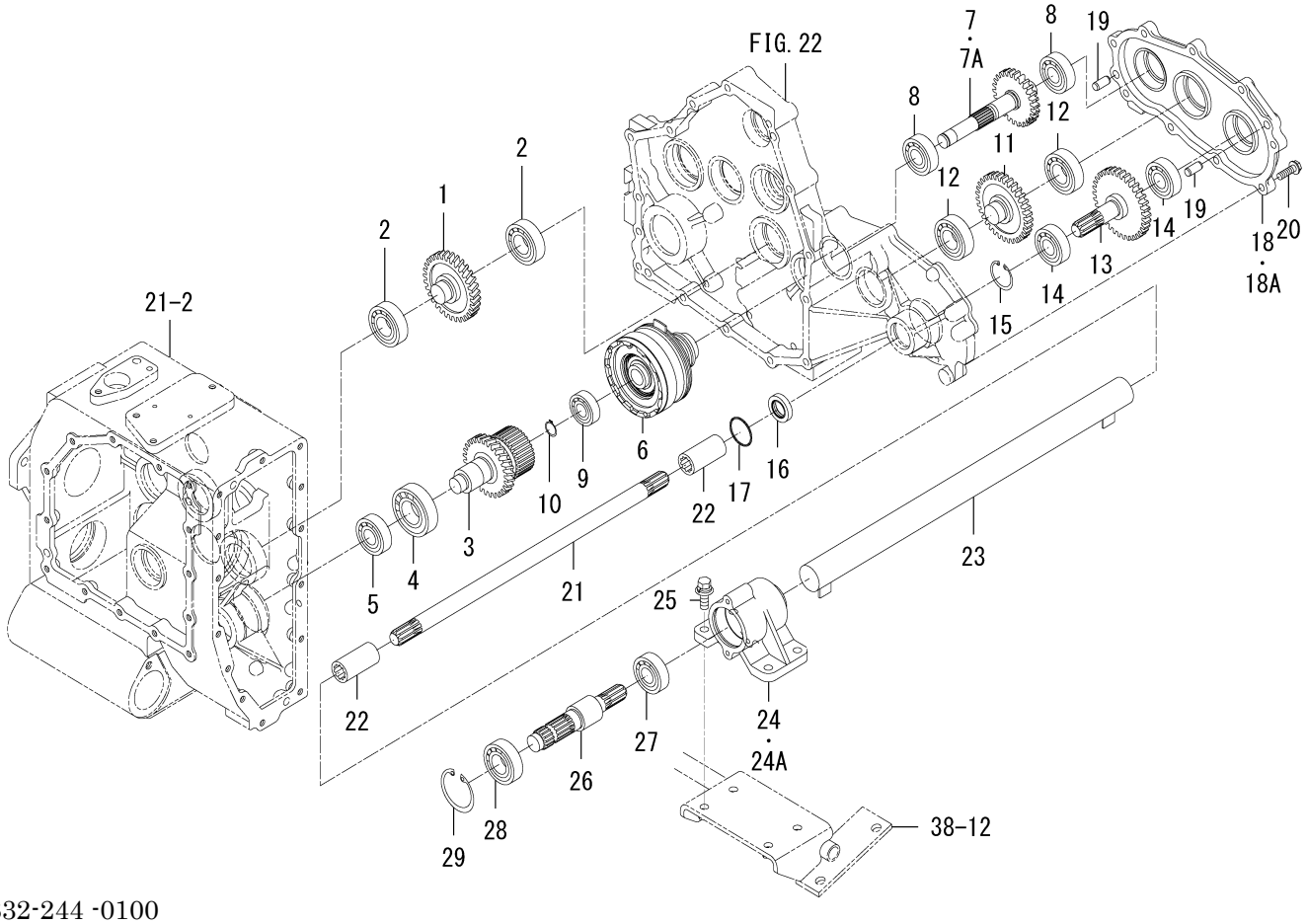


1832-244 -0100

| KEY | PART CODE | DESCRIPTION | SPC | TYPE OF MODEL | | ITC | COL | GRP | REMARKS |
|---|---|---|---|---|---|---|---|---|---|
| | | | | SF225F | SF237F | | | | |
| 1 | 1832-204-002-00 | GEAR/HELICAL/31 | * | 1 | 1 | | | | |
| 2 | V600-110-620-50 | BEARING,RB/6205 | * | 2 | 2 | | | | |
| 3 | 1832-244-001-00 | GEAR/HELICAL/28 | * | 1 | 1 | | | | |
| 4 | V600-110-620-60 | BEARING,RB/6206 | * | 1 | 1 | | | | |
| 5 | V600-110-620-40 | BEARING,RB/6204 | * | 1 | 1 | | | | |
| 6 | 1825-127-300-00 | CLUTCH/PTO ASSY | * | 1 | 1 | | | | FIG 111 |
| 7 | 1832-244-200-00 | GEAR/SPUR/26 COMP | * | 1 -900 | 1 -1254 | | | | |
| 7A | 1832-244-200-10 | GEAR/SPUR/26 COMP | * | 1 901- | 1 1255- | 1 | | | |
| 8 | V600-110-620-40 | BEARING,RB/6204 | * | 2 | 2 | | | | |
| 9 | V600-110-620-30 | BEARING,RB/6203 | * | 1 | 1 | | | | |
| 10 | V704-140-017-00 | RING,SNAP/17 C | * | 1 | 1 | | | | |
| 11 | 1832-244-002-00 | GEAR/SPUR/33 | * | 1 | 1 | | | | |
| 12 | V600-110-620-50 | BEARING,RB/6205 | * | 2 | 2 | | | | |
| 13 | 1832-244-005-00 | GEAR/SPUR/34 | * | 1 | 1 | | | | |
| 14 | V600-110-620-40 | BEARING,RB/6204 | * | 2 | 2 | | | | |
| 15 | V705-140-034-00 | RING,SNAP/34 C | * | 1 | 1 | | | | |
| 16 | 1614-222-007-00 | SEAL/OIL | * | 1 | 1 | | | | |
| 17 | V723-102-003-40 | O-RING/1A,S34 | * | 1 | 1 | | | | |
| 18 | 1832-244-004-00 | METAL/PTO/MOWER | * | 1 -1069 | 1 -1377 | | | | |
| 18A | 1832-244-004-10 | METAL/PTO/MOWER | * | 1 1070- | 1 1378- | 1 | | | |
| 19 | V523-101-002-20 | PIN,ST,B/10X22 | * | 2 | 2 | | | | |
| 20 | V231-360-802-50 | FLANGEBOLT/M8X25 | * | 9 | 9 | | | | |
| 21 | 1832-244-003-00 | SHAFT/465 | * | 1 | 1 | | | | |
| 22 | 1673-431-001-10 | COUPRING/16X27X55 | * | 2 | 2 | | | | |
| 23 | 1832-244-230-10 | TUBE/540 COMP | * | 1 | 1 | | | | |
| 24 | 1771-244-011-10 | METAL/PTO/B | * | 1 -1013 | 1 -1286 | | | | |
| 24A | 1771-244-011-20 | METAL/PTO/B | * | 1 1014- | 1 1287- | 1 | | | |
| 25 | V211-661-003-00 | BOLT,SP/M10X30/7T | * | 4 | 4 | | | | |
| 26 | 1832-244-006-00 | SHAFT/PTO | * | 1 | 1 | | | | |
| 27 | 1729-202-014-00 | BEARING/BALL | * | 1 | 1 | | | | |

# FIG. 32 DRIVE(PTO/SIDE)SYSTEM

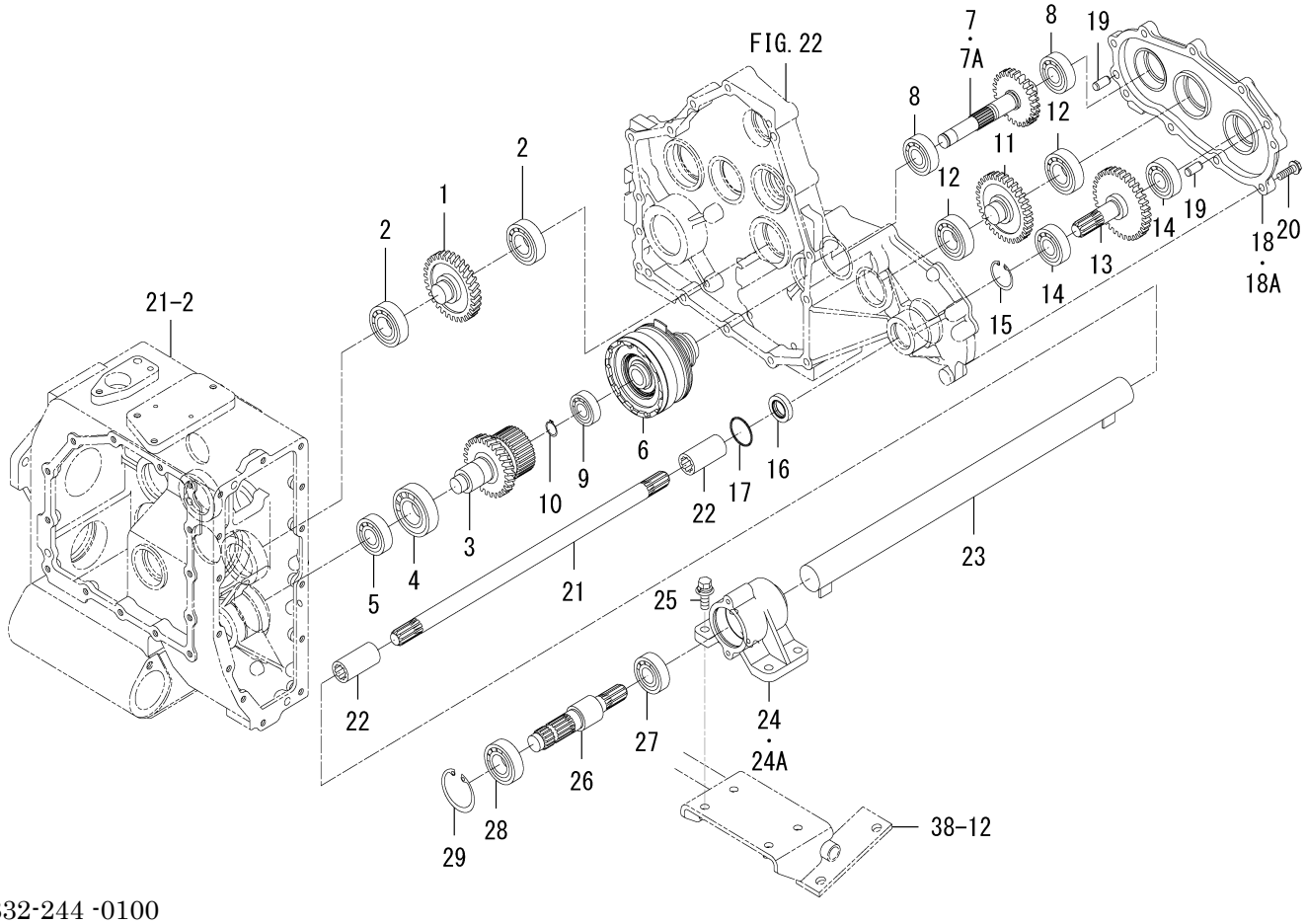


1832-244 -0100

| KEY | PART CODE | DESCRIPTION | SPC | TYPE OF MODEL | | ITC | COL | GRP | REMARKS |
|---|---|---|---|---|---|---|---|---|---|
| | | | | SF225F | SF237F | | | | |
| 28 | 1832-244-007-00 | BEARING/BALL/HPS | * | 1 | 1 | | | | |
| 29 | V705-140-052-00 | RING,SNAP/52 C | * | 1 | 1 | | | | |

# FIG. 33 DRIVE(PTO/BLOWER)SYSTEM(237F-B TYPE)

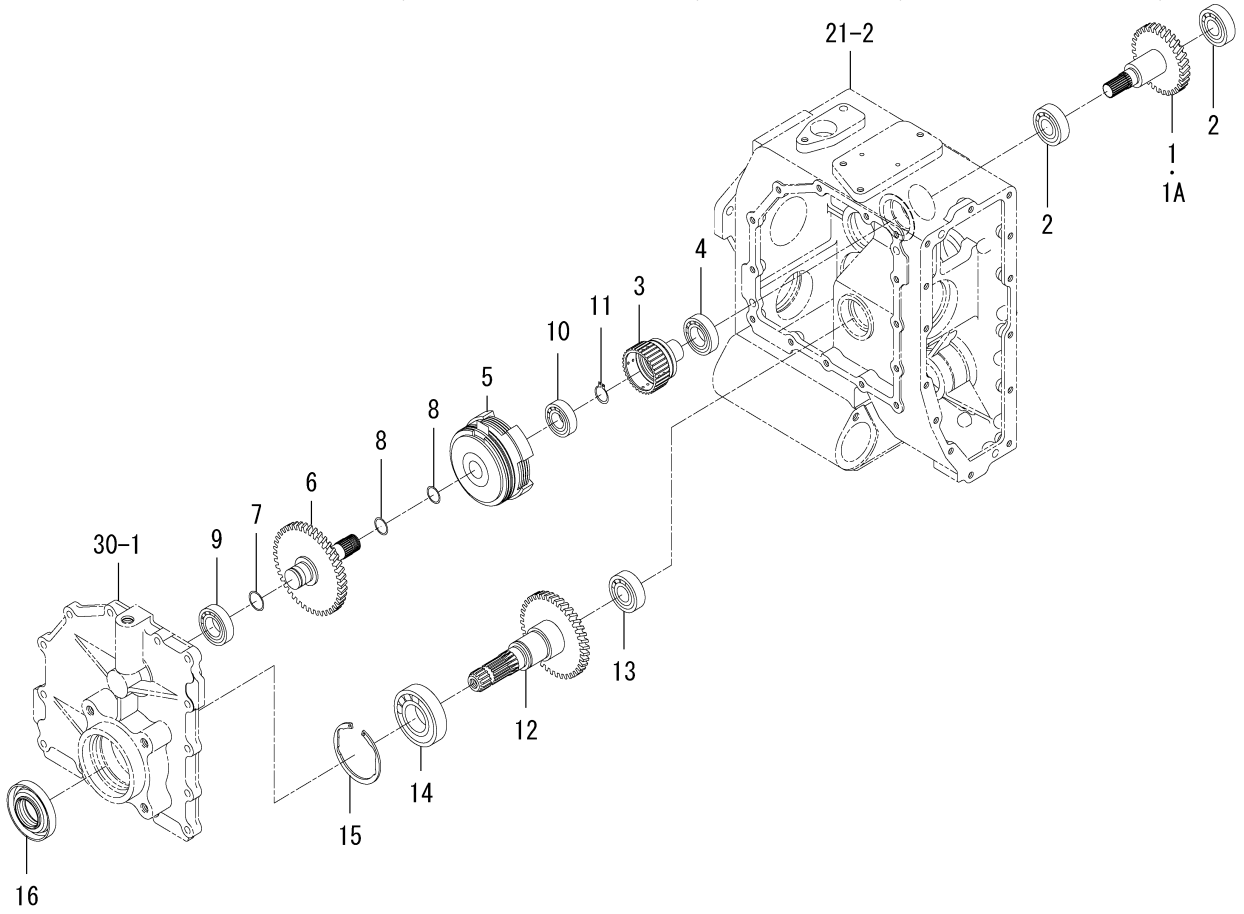


1832-245B-0100

| KEY | PART CODE | DESCRIPTION | SPC | TYPE OF MODEL | | ITC | COL | GRP | REMARKS |
|---|---|---|---|---|---|---|---|---|---|
| | | | | SF225F | SF237F | | | | |
| 1 | 1832-245-061-10 | GEAR/HELICAL/31 | * | | 1 -597 | | | | |
| 1A | 1832-245-061-20 | GEAR/HELICAL/31 | * | | 1 598- | 1 | | | |
| 2 | V600-110-620-40 | BEARING,RB/6204 | * | | 2 | | | | |
| 3 | 1832-245-001-00 | COUPLING/PTO | * | | 1 | | | | |
| 4 | V600-110-600-50 | BEARING,RB/6005 | * | | 1 | | | | |
| 5 | 1725-219-720-20 | CLUTCH/PTO ASSY | * | | 1 | | | | FIG 109 |
| 6 | 1832-245-062-00 | GEAR/HELICAL/42 | * | | 1 | | | | |
| 7 | 1575-261-018-00 | RING/25 | * | | 1 | | | | |
| 8 | 1688-211-057-00 | RING/22 | * | | 2 | | | | |
| 9 | V600-110-600-50 | BEARING,RB/6005 | * | | 1 | | | | |
| 10 | V600-111-600-40 | BEARING,RB/16004 | * | | 1 | | | | |
| 11 | V704-140-020-00 | RING,SNAP/20 C | * | | 1 | | | | |
| 12 | 1832-245-063-00 | GEAR/HELICAL/39 | * | | 1 | | | | |
| 13 | V600-110-620-40 | BEARING,RB/6204 | * | | 1 | | | | |
| 14 | V600-110-620-70 | BEARING,RB/6207 | * | | 1 | | | | |
| 15 | V707-140-072-00 | RING,SNAP/R72 | * | | 1 | | | | |
| 16 | 1632-273-200-00 | SEAL,OIL | * | | 1 | | | | |

# FIG. 34 DRIVE(PTO/BLOWER)SYSTEM(225F-B TYPE)

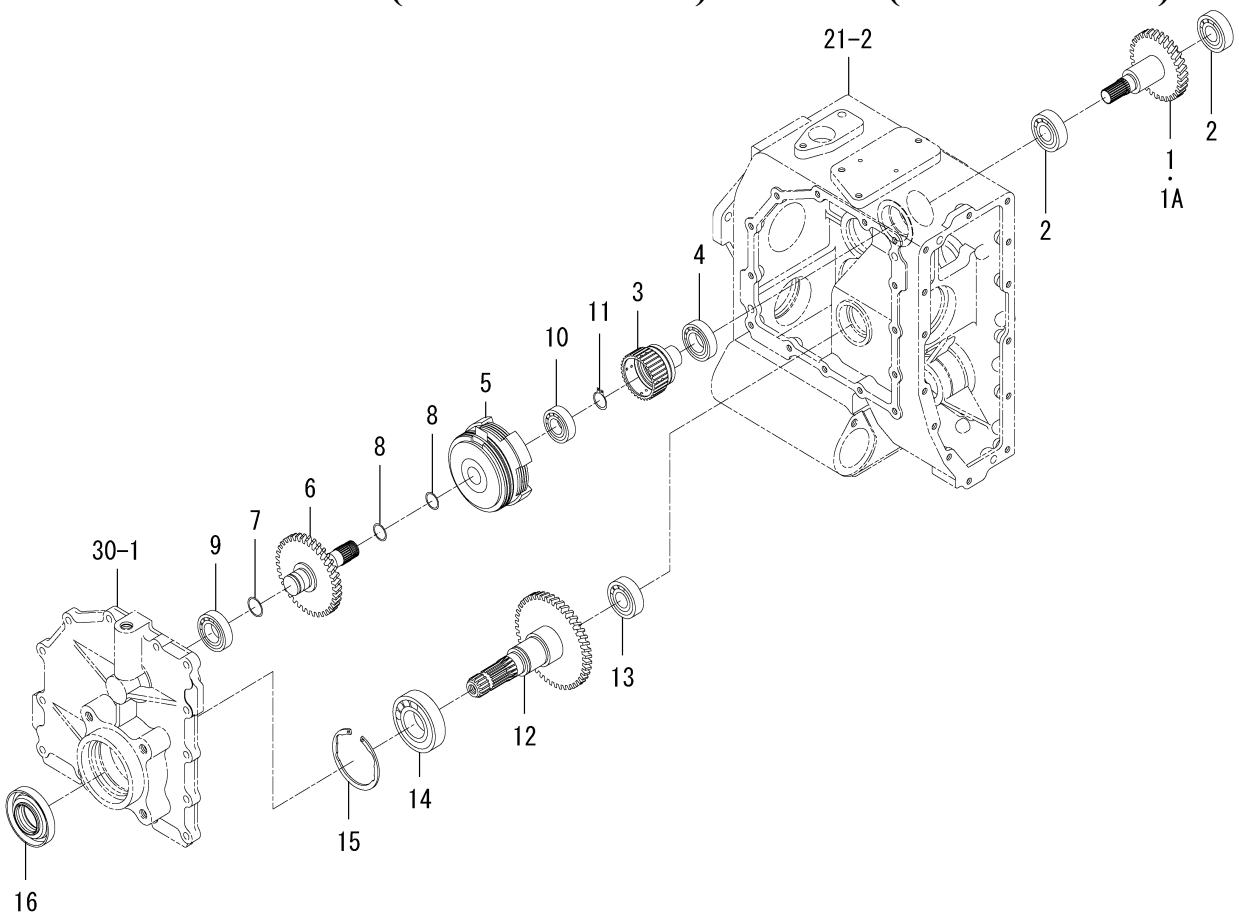


1832-245C-0100

| KEY | PART CODE | DESCRIPTION | SPC | TYPE OF MODEL | | ITC | COL | GRP | REMARKS |
|---|---|---|---|---|---|---|---|---|---|
| | | | | SF225F | SF237F | | | | |
| 1 | 1832-245-061-10 | GEAR/HELICAL/31 | * | 1 -357 | | | | | |
| 1A | 1832-245-061-20 | GEAR/HELICAL/31 | * | 1 358- | | 1 | | | |
| 2 | V600-110-620-40 | BEARING,RB/6204 | * | 2 | | | | | |
| 3 | 1832-245-001-00 | COUPLING/PTO | * | 1 | | | | | |
| 4 | V600-110-600-50 | BEARING,RB/6005 | * | 1 | | | | | |
| 5 | 1725-219-720-20 | CLUTCH/PTO ASSY | * | 1 | | | | | FIG 109 |
| 6 | 1832-245-064-00 | GEAR/HELICAL/37/SF22 | * | 1 | | | | | |
| 7 | 1575-261-018-00 | RING/25 | * | 1 | | | | | |
| 8 | 1688-211-057-00 | RING/22 | * | 2 | | | | | |
| 9 | V600-110-600-50 | BEARING,RB/6005 | * | 1 | | | | | |
| 10 | V600-111-600-40 | BEARING,RB/16004 | * | 1 | | | | | |
| 11 | V704-140-020-00 | RING,SNAP/20 C | * | 1 | | | | | |
| 12 | 1832-245-620-00 | GEAR/HELICAL/44 COMP | * | 1 | | | | | |
| 13 | V600-110-620-40 | BEARING,RB/6204 | * | 1 | | | | | |
| 14 | V600-110-620-70 | BEARING,RB/6207 | * | 1 | | | | | |
| 15 | V707-140-072-00 | RING,SNAP/R72 | * | 1 | | | | | |
| 16 | 1632-273-200-00 | SEAL,OIL | * | 1 | | | | | |

# FIG. 35 DRIVE(PTO/SIDE)SYSTEM

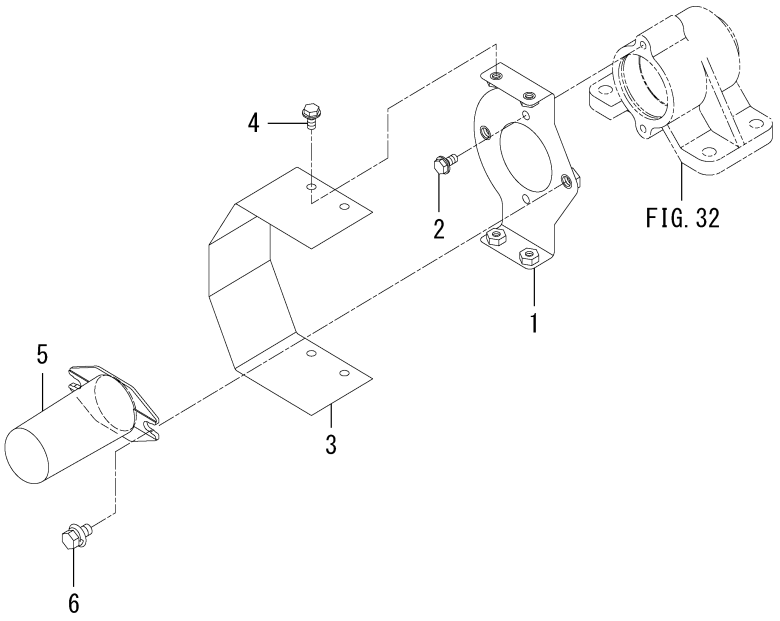


1832-246 -0100

| KEY | PART CODE | DESCRIPTION | SPC | TYPE OF MODEL | | ITC | COL | GRP | REMARKS |
|---|---|---|---|---|---|---|---|---|---|
| | | | | SF225F | SF237F | | | | |
| 1 | 1832-246-210-00 | STAY/COVER/SIDE/P | * | 1 | 1 | | | | |
| 2 | V230-360-601-20 | FLANGEBOLT/M6X12 | * | 2 | 2 | | | | |
| 3 | 1771-246-052-00 | COVER/SIDEPTO | * | 1 | 1 | | | | |
| 4 | V230-360-601-20 | FLANGEBOLT/M6X12 | * | 4 | 4 | | | | |
| 5 | 1444-314-009-10 | CAP,PTO SHAFT | * | 1 | 1 | | | | |
| 6 | V211-360-801-60 | BOLT,SP/M8X16 | * | 2 | 2 | | | | |

# FIG. 36 LINK(HST)SYSTEM

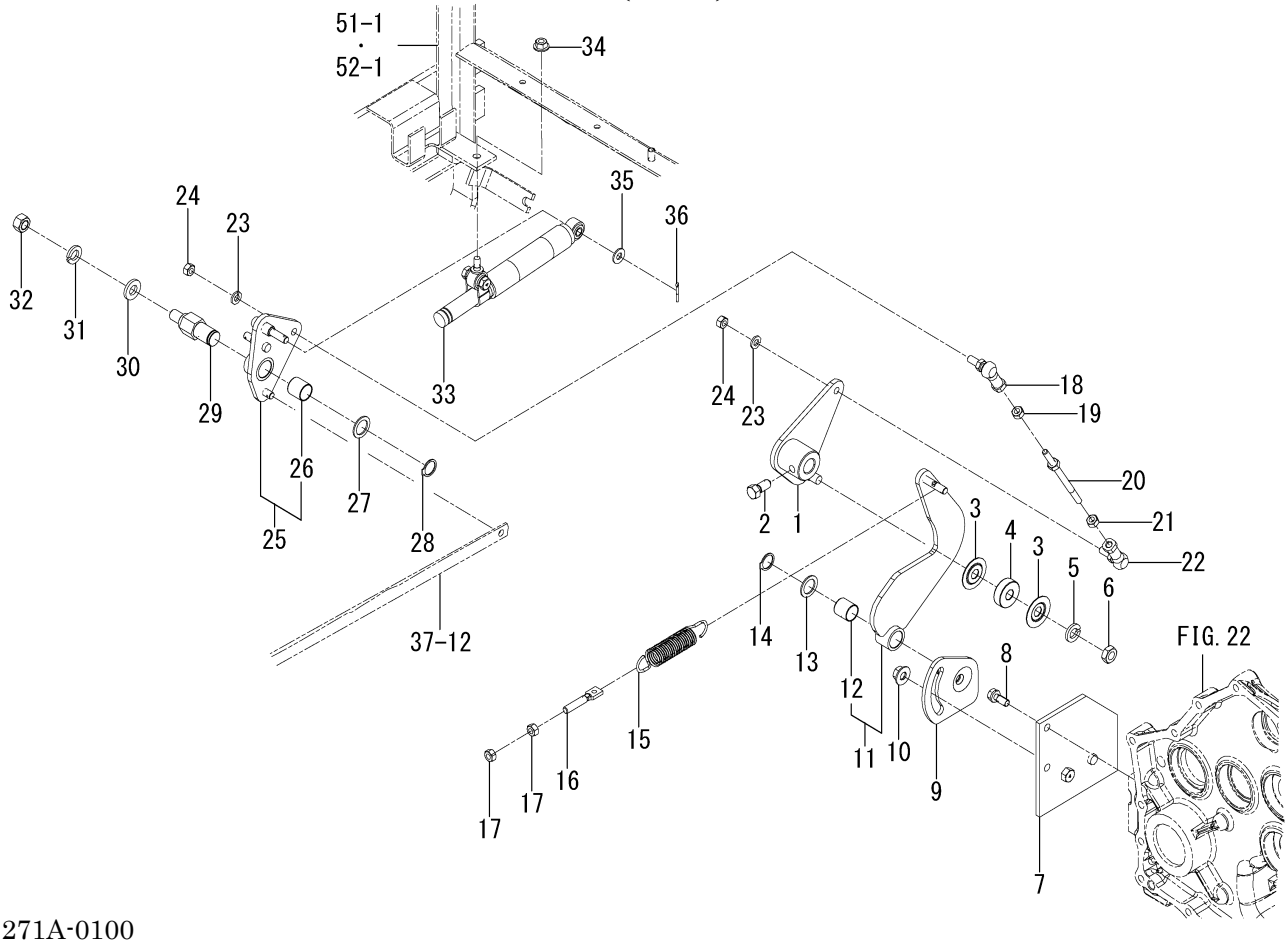


1832-271A-0100

| KEY | PART CODE | DESCRIPTION | SPC | TYPE OF MODEL | | ITC | COL | GRP | REMARKS |
|---|---|---|---|---|---|---|---|---|---|
| | | | | SF225F | SF237F | | | | |
| 1 | 1832-271-210-00 | ARM/TRUNNION COMP | * | 1 | 1 | | | | |
| 2 | 1646-226-053-00 | BOLT/SM/M10X23 | * | 1 | 1 | | | | |
| 3 | 1689-271-006-00 | WASHER/38X12X2 | * | 2 | 2 | | | | |
| 4 | V600-150-620-10 | BEARING,RB/6201SS | * | 1 | 1 | | | | |
| 5 | V401-160-012-00 | WASHER,SP/M12 | * | 1 | 1 | | | | |
| 6 | V305-260-012-00 | NUT/M12 | * | 1 | 1 | | | | |
| 7 | 1832-271-240-10 | BRACKET/NEUTRAL COMP | * | 1 | 1 | | | | |
| 8 | V211-660-802-00 | BOLT,SP/M8X20/7T | * | 2 | 2 | | | | |
| 9 | 1832-271-230-00 | PLATE/ADJUST COMP | * | 1 | 1 | | | | |
| 10 | V362-260-010-00 | NUT/WASHER/M10 | * | 1 | 1 | | | | |
| 11 | 1832-271-260-00 | ARM/NEUTRAL ASSY | * | 1 | 1 | | | | |
| 12 | 2504-135-008-10 | BUSH/18X20X20 | * | 1 | 1 | | | | |
| 13 | 2144-419-022-00 | WASHER/18X26X02 | * | 1 | 1 | | | | |
| 14 | V704-140-018-00 | RING,SNAP/18 C | * | 1 | 1 | | | | |
| 15 | 2500-210-016-00 | SPRING/HE108 | * | 1 | 1 | | | | |
| 16 | 1832-271-002-00 | ROD/M08X47 | * | 1 | 1 | | | | |
| 17 | V304-260-008-00 | NUT/M8 | * | 2 | 2 | | | | |
| 18 | 1560-695-021-00 | JOINT BALL M08RH | * | 1 | 1 | | | | |
| 19 | V304-260-008-00 | NUT/M8 | * | 1 | 1 | | | | |
| 20 | 1683-271-560-00 | ROD/M08X110 COMP | * | 1 | 1 | | | | |
| 21 | 1560-132-007-30 | NUT/LH/M08 | * | 1 | 1 | | | | |
| 22 | 1560-695-022-00 | JOINT BALL M08LH | * | 1 | 1 | | | | |
| 23 | V401-160-008-00 | WASHER,SP/M8 | * | 2 | 2 | | | | |
| 24 | V304-260-008-00 | NUT/M8 | * | 2 | 2 | | | | |
| 25 | 1832-271-610-00 | ARM/HST ASSY | * | 1 | 1 | | | | |
| 26 | 2504-135-008-10 | BUSH/18X20X20 | * | 1 | 1 | | | | |
| 27 | 2144-419-022-00 | WASHER/18X26X02 | * | 1 | 1 | | | | |
| 28 | V704-140-018-00 | RING,SNAP/18 C | * | 1 | 1 | | | | |
| 29 | 1832-271-001-10 | PIN/COUNTER/HST | * | 1 | 1 | | | | |
| 30 | 3504-418-007-10 | WASHER,SUPPORT | * | 1 | 1 | | | | |

# FIG. 36 LINK(HST)SYSTEM

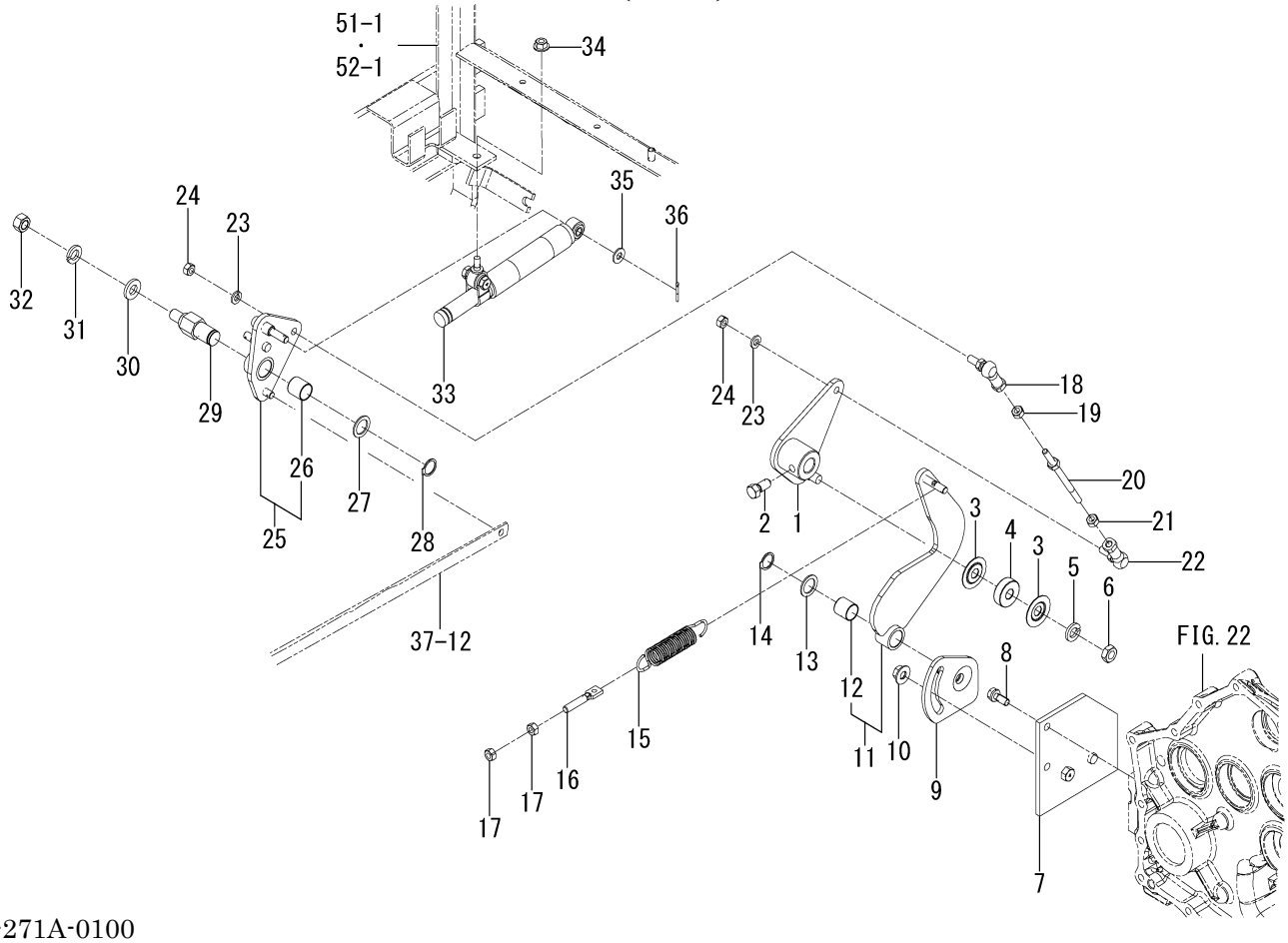


1832-271A-0100

| KEY | PART CODE | DESCRIPTION | SPC | TYPE OF MODEL | | ITC | COL | GRP | REMARKS |
|---|---|---|---|---|---|---|---|---|---|
| | | | | SF225F | SF237F | | | | |
| 31 | V401-160-012-00 | WASHER,SP/M12 | * | 1 | 1 | | | | |
| 32 | V304-460-012-00 | NUT/M12/7T | * | 1 | 1 | | | | |
| 33 | 1646-640-580-00 | DAMPER/OIL ASSY | * | 1 | 1 | | | | |
| 34 | V362-260-008-00 | NUT/WASHER/M8 | * | 1 | 1 | | | | |
| 35 | V411-260-008-00 | WASHER,PL/M8 | * | 1 | 1 | | | | |
| 36 | V500-162-502-00 | PIN,SPLIT/2.5X20 | * | 1 | 1 | | | | |

# FIG. 37 PEDAL(HST)SYSTEM

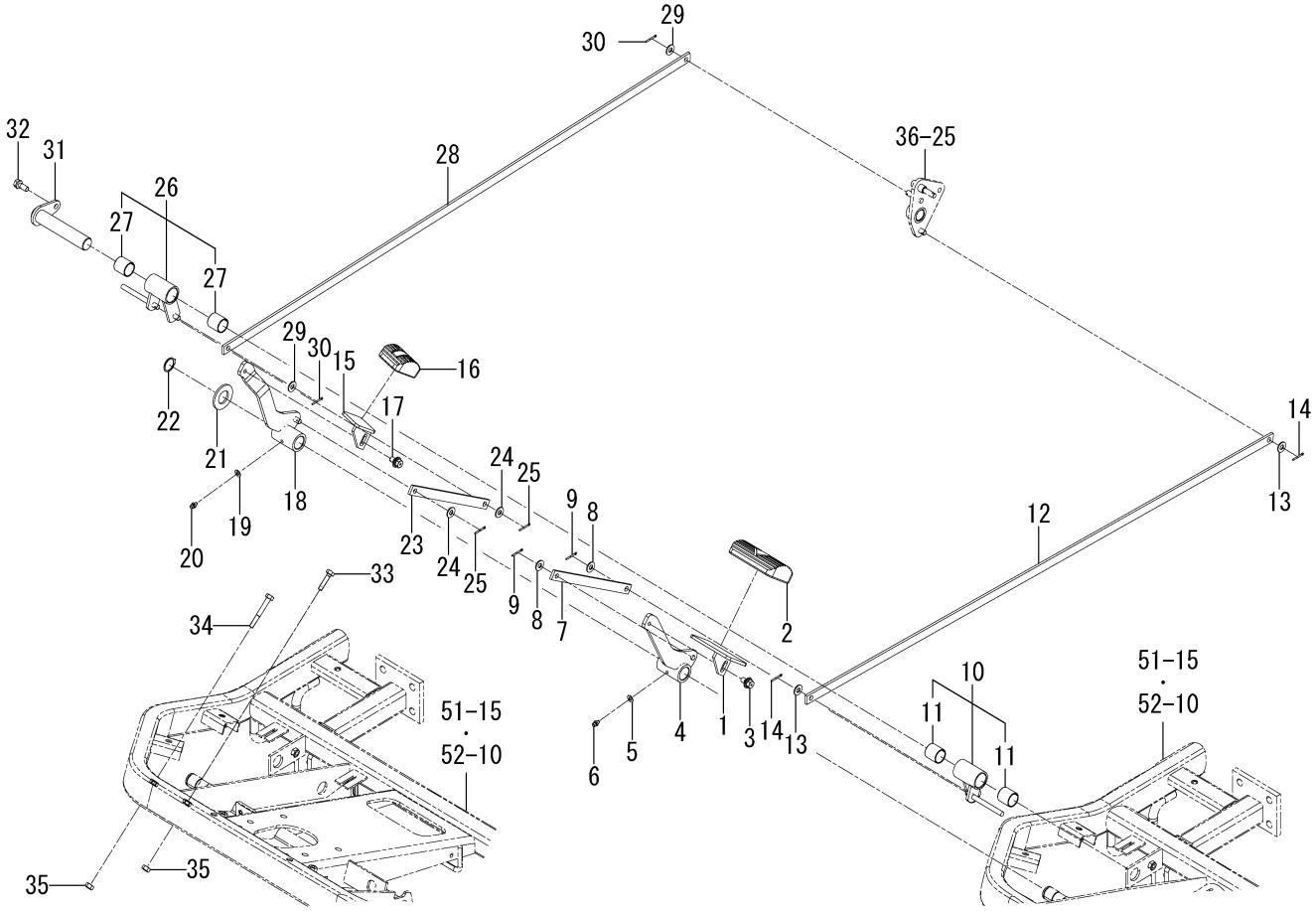


1832-272 -0100

| KEY | PART CODE | DESCRIPTION | SPC | TYPE OF MODEL | | ITC | COL | GRP | REMARKS |
|---|---|---|---|---|---|---|---|---|---|
| | | | | SF225F | SF237F | | | | |
| 1 | 1689-272-260-00 | PEDAL/HST/F COMP | * | 1 | 1 | | | | |
| 2 | 1747-640-067-00 | PAD/HST | * | 1 | 1 | | | | |
| 3 | V211-360-801-60 | BOLT,SP/M8X16 | * | 1 | 1 | | | | |
| 4 | 1832-272-210-00 | ARM/HST/F COMP | * | 1 | 1 | | | | |
| 5 | V411-260-006-00 | WASHER,PL/M6 | * | 1 | 1 | | | | |
| 6 | V760-150-000-00 | NIPPLE,GREASE | * | 1 | 1 | | | | |
| 7 | 1832-272-001-10 | PLATE/I/16X217 | * | 1 | 1 | | | | |
| 8 | V411-260-008-00 | WASHER,PL/M8 | * | 2 | 2 | | | | |
| 9 | V500-162-502-00 | PIN,SPLIT/2.5X20 | * | 2 | 2 | | | | |
| 10 | 1832-272-260-10 | ARM/COUNTER/FRONT | * | 1 | 1 | | | | |
| 11 | 1725-433-202-10 | BUSH/22X25X25 | * | 2 | 2 | | | | |
| 12 | 1832-272-003-00 | PLATE/I/16X1105 | * | 1 | 1 | | | | |
| 13 | V411-260-008-00 | WASHER,PL/M8 | * | 2 | 2 | | | | |
| 14 | V500-162-502-00 | PIN,SPLIT/2.5X20 | * | 2 | 2 | | | | |
| 15 | 1689-272-240-00 | PEDAL/HST/RH COMP | * | 1 | 1 | | | | |
| 16 | 1774-272-071-00 | PAD/HST/R | * | 1 | 1 | | | | |
| 17 | V211-360-801-60 | BOLT,SP/M8X16 | * | 1 | 1 | | | | |
| 18 | 1832-272-220-10 | ARM/HST/R COMP | * | 1 | 1 | | | | |
| 19 | V411-260-006-00 | WASHER,PL/M6 | * | 1 | 1 | | | | |
| 20 | V760-150-000-00 | NIPPLE,GREASE | * | 1 | 1 | | | | |
| 21 | 4319-312-003-00 | PLATE | * | 2 | 2 | | | | |
| 22 | V704-140-022-00 | RING,SNAP/22 C | * | 1 | 1 | | | | |
| 23 | 1832-272-001-10 | PLATE/I/16X217 | * | 1 | 1 | | | | |
| 24 | V411-260-008-00 | WASHER,PL/M8 | * | 2 | 2 | | | | |
| 25 | V500-162-502-00 | PIN,SPLIT/2.5X20 | * | 2 | 2 | | | | |
| 26 | 1832-272-270-10 | ARM/COUNTER/REA ASSY | * | 1 | 1 | | | | |
| 27 | 1725-433-202-10 | BUSH/22X25X25 | * | 2 | 2 | | | | |
| 28 | 1832-272-003-00 | PLATE/I/16X1105 | * | 1 | 1 | | | | |
| 29 | V411-260-008-00 | WASHER,PL/M8 | * | 2 | 2 | | | | |
| 30 | V500-162-502-00 | PIN,SPLIT/2.5X20 | * | 2 | 2 | | | | |

# FIG. 37 PEDAL(HST)SYSTEM

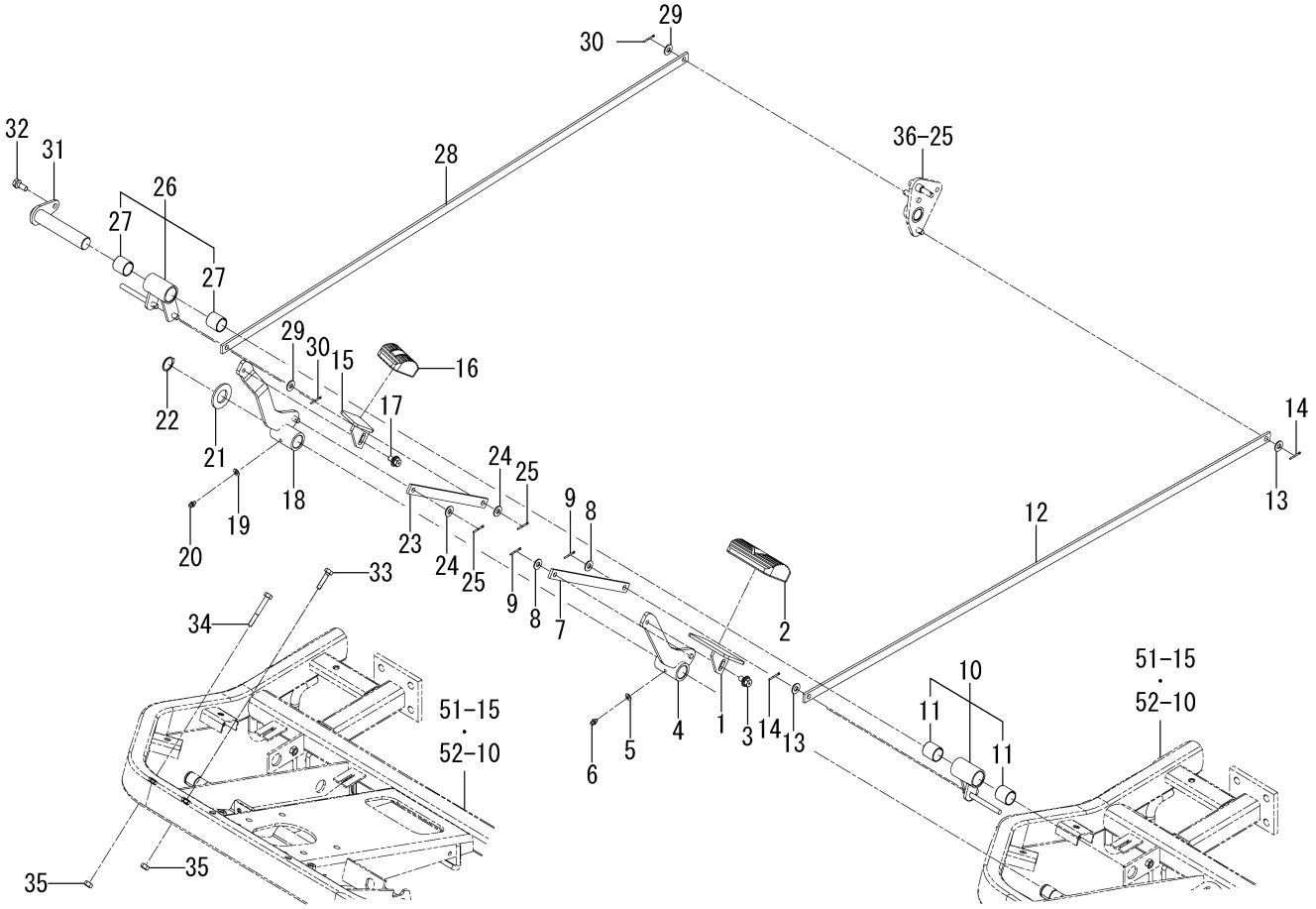


1832-272 -0100

| KEY | PART CODE | DESCRIPTION | SPC | TYPE OF MODEL | | ITC | COL | GRP | REMARKS |
|---|---|---|---|---|---|---|---|---|---|
| | | | | SF225F | SF237F | | | | |
| 31 | 1832-272-250-00 | PIN/COUNTER/HST COMP | * | 1 | 1 | | | | |
| 32 | V211-560-802-00 | BOLT,S/M8X20/7T | * | 1 | 1 | | | | |
| 33 | V201-360-804-50 | BOLT/M8X45/7T | * | 1 | 1 | | | | |
| 34 | W201-360-807-50 | BOLT | * | 1 | 1 | | | | |
| 35 | V304-460-008-00 | NUT/M8/7T | * | 2 | 2 | | | | |

# FIG. 38 CASE(CHAIN)SYSTEM

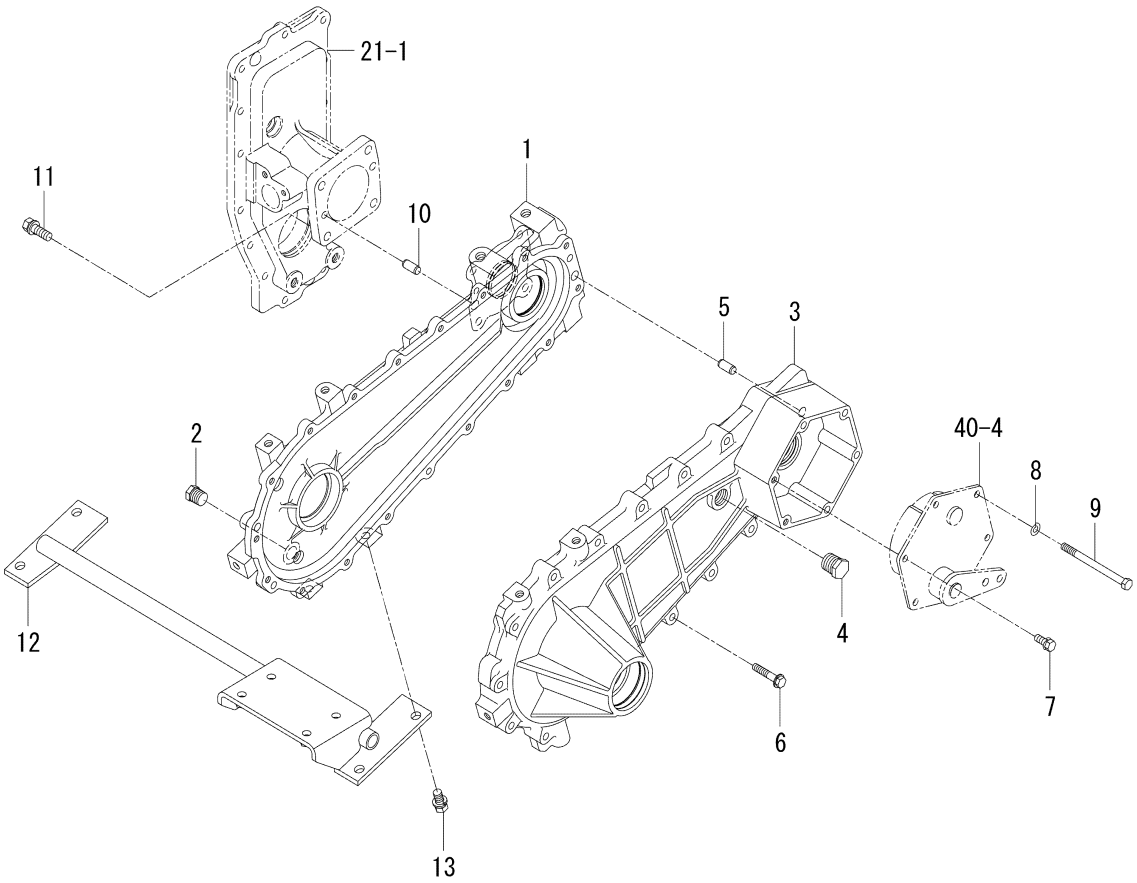


1832-306 -0100

| KEY | PART CODE | DESCRIPTION | SPC | TYPE OF MODEL | | ITC | COL | GRP | REMARKS |
|---|---|---|---|---|---|---|---|---|---|
| | | | | SF225F | SF237F | | | | |
| 1 | 1832-306-001-00 | CASE/CHAIN/A | * | 2 | 2 | | | | |
| 2 | V782-160-000-6B | PLUG/SCREW/SEAL | * | 4 | 4 | | | | |
| 3 | 1832-306-002-10 | CASE/CHAIN/B | * | 2 | 2 | | | | |
| 4 | V782-160-000-8B | PLUG/SCREW/SEAL | * | 2 | 2 | | | | |
| 5 | V523-101-002-20 | PIN,ST,B/10X22 | * | 4 | 4 | | | | |
| 6 | V231-360-804-00 | FLANGEBOLT/M8X40 | * | 28 | 28 | | | | |
| 7 | V211-260-802-00 | BOLT,S/M8X20 | * | 4 | 4 | | | | |
| 8 | V401-160-008-00 | WASHER,SP/M8 | * | 8 | 8 | | | | |
| 9 | V201-260-810-50 | BOLT/M8X105 | * | 8 | 8 | | | | |
| 10 | V523-101-002-20 | PIN,ST,B/10X22 | * | 4 | 4 | | | | |
| 11 | V211-561-003-00 | BOLT,S/M10X30/7T | * | 8 | 8 | | | | |
| 12 | 1832-306-210-00 | STAY/CASE COMP | * | 1 | 1 | | | | |
| 13 | V211-561-002-00 | BOLT,S/M10X20/7T | * | 4 | 4 | | | | |

# FIG. 39 SHAFT(WHEEL/FRONT)SYSTEM

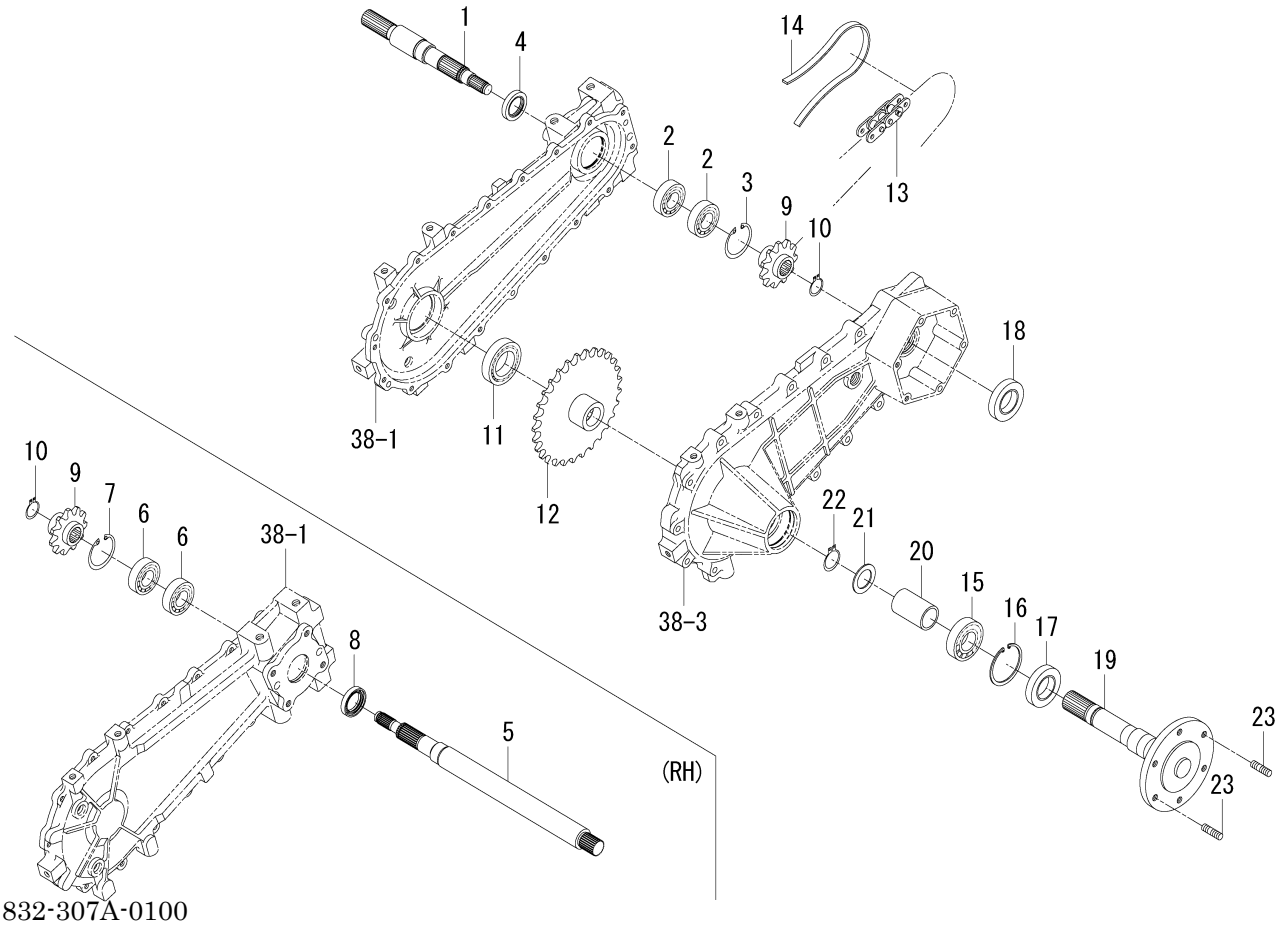


1832-307A-0100

| KEY | PART CODE | DESCRIPTION | SPC | TYPE OF MODEL | | ITC | COL | GRP | REMARKS |
|---|---|---|---|---|---|---|---|---|---|
| | | | | SF225F | SF237F | | | | |
| 1 | 1771-307-051-20 | SHAFT/DIFF/LH | * | 1 | 1 | | | | |
| 2 | V600-110-620-50 | BEARING,RB/6205 | * | 2 | 2 | | | | |
| 3 | V705-140-052-00 | RING,SNAP/52 C | * | 1 | 1 | | | | |
| 4 | V744-130-450-80 | SEAL,OIL/TC30458 | * | 1 | 1 | | | | |
| 5 | 1832-307-001-00 | SHAFT/DIFF/RH | * | 1 | 1 | | | | |
| 6 | V600-110-620-50 | BEARING,RB/6205 | * | 2 | 2 | | | | |
| 7 | V705-140-052-00 | RING,SNAP/52 C | * | 1 | 1 | | | | |
| 8 | V744-130-450-80 | SEAL,OIL/TC30458 | * | 1 | 1 | | | | |
| 9 | 1728-307-004-00 | SPROCKET/11 | * | 2 | 2 | | | | |
| 10 | V704-140-025-00 | RING,SNAP/25 C | * | 2 | 2 | | | | |
| 11 | V600-110-600-80 | BEARING,RB/6008 | * | 2 | 2 | | | | |
| 12 | 1728-307-025-00 | SPROCKET/29 | * | 2 | 2 | | | | |
| 13 | 1832-307-002-00 | CHAIN/ROLLER60X060 | * | 2 | 2 | | | | |
| 14 | 1728-307-026-10 | GUIDE/CHAIN | * | 2 | 2 | | | | |
| 15 | V600-110-620-60 | BEARING,RB/6206 | * | 2 | 2 | | | | |
| 16 | 1710-241-053-00 | RING/SNAP/R62 | * | 2 | 2 | | | | |
| 17 | V744-120-400-80 | SEAL,OIL/TC20408 | * | 2 | 2 | | | | |
| 18 | 7827-205-010-00 | SEAL/OIL | * | 2 | 2 | | | | |
| 19 | 1832-307-610-00 | SHAFT/WHEEL COMP | * | 2 | 2 | | | | |
| 20 | 1832-307-061-00 | COLLAR/31X38X61 | * | 2 | 2 | | | | |
| 21 | 1480-207-011-00 | WASHER/31X42X1 | * | 2 | 2 | | | | |
| 22 | V704-140-030-00 | RING,SNAP/30 C | * | 2 | 2 | | | | |
| 23 | V251-341-002-00 | STUD/M10X20/7T | * | 4 | 4 | | | | |
| | | | | | | | | | |
| | | | | | | | | | |
| | | | | | | | | | |
| | | | | | | | | | |
| | | | | | | | | | |
| | | | | | | | | | |
| | | | | | | | | | |

# FIG. 40 BRAKE SYSTEM

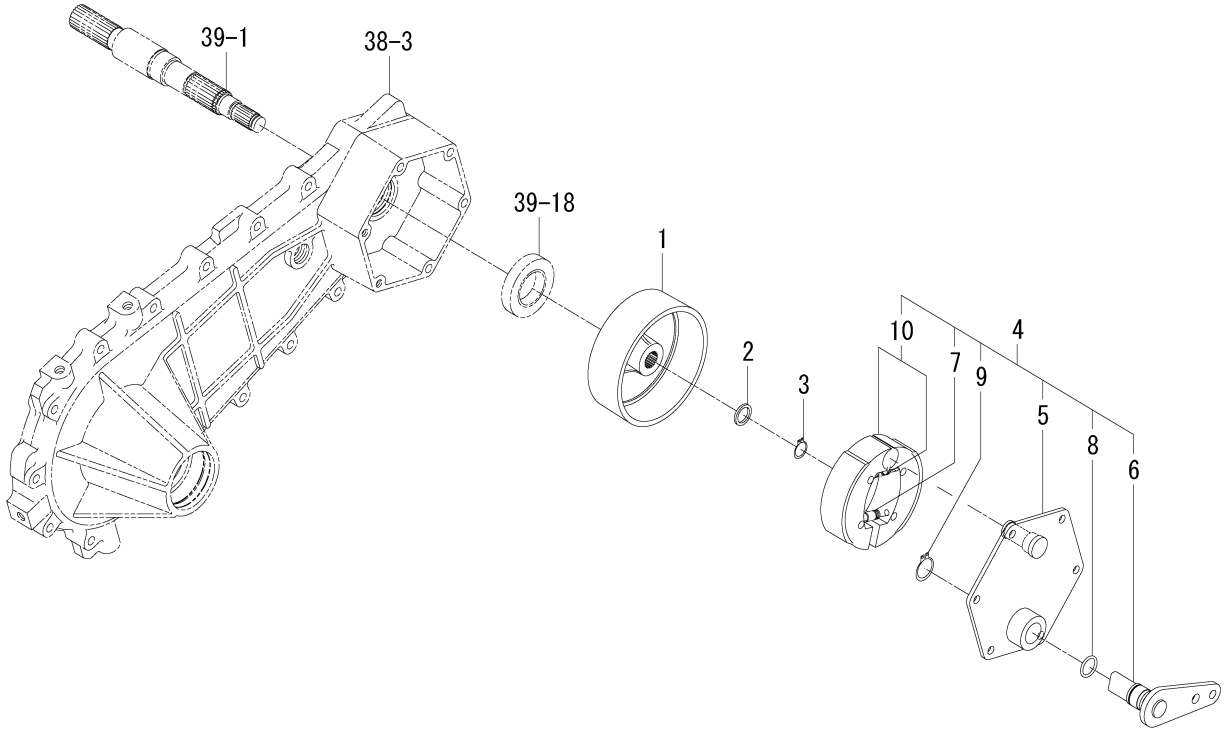


1832-310 -0100

| KEY | PART CODE | DESCRIPTION | SPC | TYPE OF MODEL | | ITC | COL | GRP | REMARKS |
|---|---|---|---|---|---|---|---|---|---|
| | | | | SF225F | SF237F | | | | |
| 1 | 1832-310-001-10 | DRUM/BRAKE | * | 2 | 2 | | | | |
| 2 | 1728-310-052-00 | WASHER/17X22X03 | * | 2 | 2 | | | | |
| 3 | V704-140-016-00 | RING,SNAP/16 C | * | 2 | 2 | | | | |
| 4 | 1832-310-210-00 | BRAKE/114 ASSY | * | 2 | 2 | | | | |
| 5 | 1427-310-220-10 | COVER,BRAKE | * | 2 | 2 | | | | |
| 6 | 1832-310-270-00 | PIN/BRAKE COMP | * | 2 | 2 | | | | |
| 7 | 1427-310-001-00 | SPRING,TENSION | * | 4 | 4 | | | | |
| 8 | V720-102-401-80 | O-RING/1A,P18 | * | 2 | 2 | | | | |
| 9 | V704-140-022-00 | RING,SNAP/22 C | * | 2 | 2 | | | | |
| 10 | 1832-310-250-00 | SHOE/BRAKE SET | * | 2 | 2 | | | | |

# FIG. 41 PEDAL(BRAKE)SYSTEM

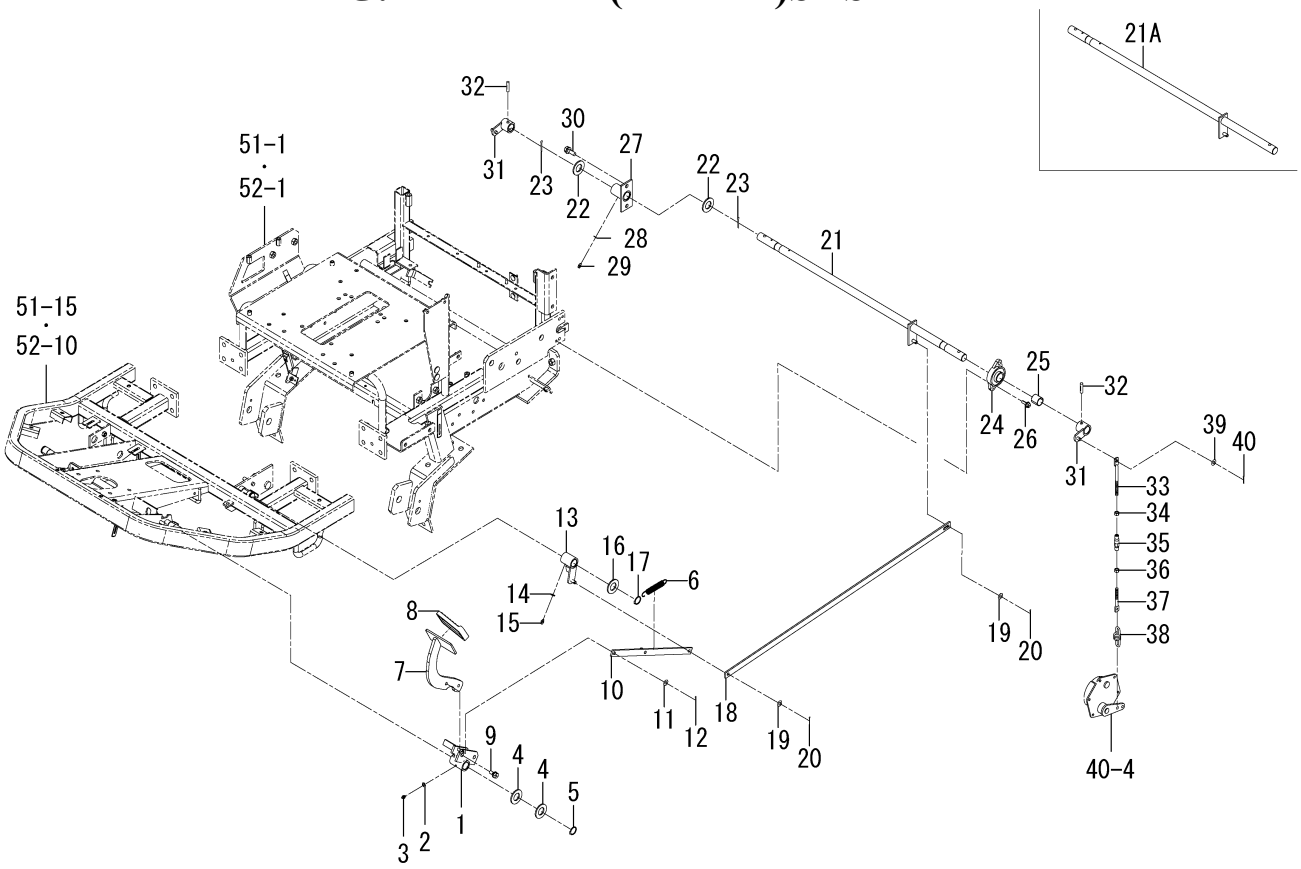


1832-312 -0100

| KEY | PART CODE | DESCRIPTION | SPC | TYPE OF MODEL | | ITC | COL | GRP | REMARKS |
|---|---|---|---|---|---|---|---|---|---|
| | | | | SF225F | SF237F | | | | |
| 1 | 1832-312-220-00 | ARM/BRAKE COMP | * | 1 | 1 | | | | |
| 2 | V411-260-006-00 | WASHER,PL/M6 | * | 1 | 1 | | | | |
| 3 | V760-150-000-00 | NIPPLE,GREASE | * | 1 | 1 | | | | |
| 4 | 4319-312-003-00 | PLATE | * | 2 | 2 | | | | |
| 5 | V704-140-022-00 | RING,SNAP/22 C | * | 1 | 1 | | | | |
| 6 | 1650-135-002-00 | SPRING/HE095 | * | 1 | 1 | | | | |
| 7 | 1832-312-210-00 | PEDAL/BRAKE COMP | * | 1 | 1 | | | | |
| 8 | 1524-122-001-10 | PAD | * | 1 | 1 | | | | |
| 9 | V231-361-002-00 | FLANGEBOLT/M10X20 | * | 2 | 2 | | | | |
| 10 | 1832-312-280-00 | PLATE/BRAKE COMP | * | 1 | 1 | | | | |
| 11 | V411-260-008-00 | WASHER,PL/M8 | * | 1 | 1 | | | | |
| 12 | V500-162-502-00 | PIN,SPLIT/2.5X20 | * | 1 | 1 | | | | |
| 13 | 1832-312-230-00 | ARM/COUNTER/BRAKE | * | 1 | 1 | | | | |
| 14 | V411-260-006-00 | WASHER,PL/M6 | * | 1 | 1 | | | | |
| 15 | V760-150-000-00 | NIPPLE,GREASE | * | 1 | 1 | | | | |
| 16 | V411-260-022-00 | WASHER,PL/M22 | * | 1 | 1 | | | | |
| 17 | V704-140-022-00 | RING,SNAP/22 C | * | 1 | 1 | | | | |
| 18 | 1832-312-002-00 | PLATE/I/19X927 | * | 1 | 1 | | | | |
| 19 | V411-260-008-00 | WASHER,PL/M8 | * | 2 | 2 | | | | |
| 20 | V500-162-502-00 | PIN,SPLIT/2.5X20 | * | 2 | 2 | | | | |
| 21 | 1832-312-240-10 | SHAFT/BRAKE COMP | * | 1 -68 | 1 -363 | | | | |
| 21A | 1832-312-240-20 | SHAFT/BRAKE COMP | * | 1 69- | 1 364- | 1 | | | |
| 22 | V411-260-022-00 | WASHER,PL/M22 | * | 2 | 2 | | | | |
| 23 | V500-164-004-00 | PIN,SPLIT/4X40 | * | 2 | 2 | | | | |
| 24 | 1832-312-003-00 | RBB/FLANGE | * | 1 | 1 | | | | |
| 25 | 1725-433-202-10 | BUSH/22X25X25 | * | 1 | 1 | | | | |
| 26 | V231-360-802-00 | FLANGEBOLT/M8X20 | * | 2 | 2 | | | | |
| 27 | 1832-312-270-20 | HUB/BRAKE/SHAFT COMP | * | 1 | 1 | | | | |
| 28 | V411-260-006-00 | WASHER,PL/M6 | * | 1 | 1 | | | | |
| 29 | V760-150-000-00 | NIPPLE,GREASE | * | 1 | 1 | | | | |

# FIG. 41 PEDAL(BRAKE)SYSTEM

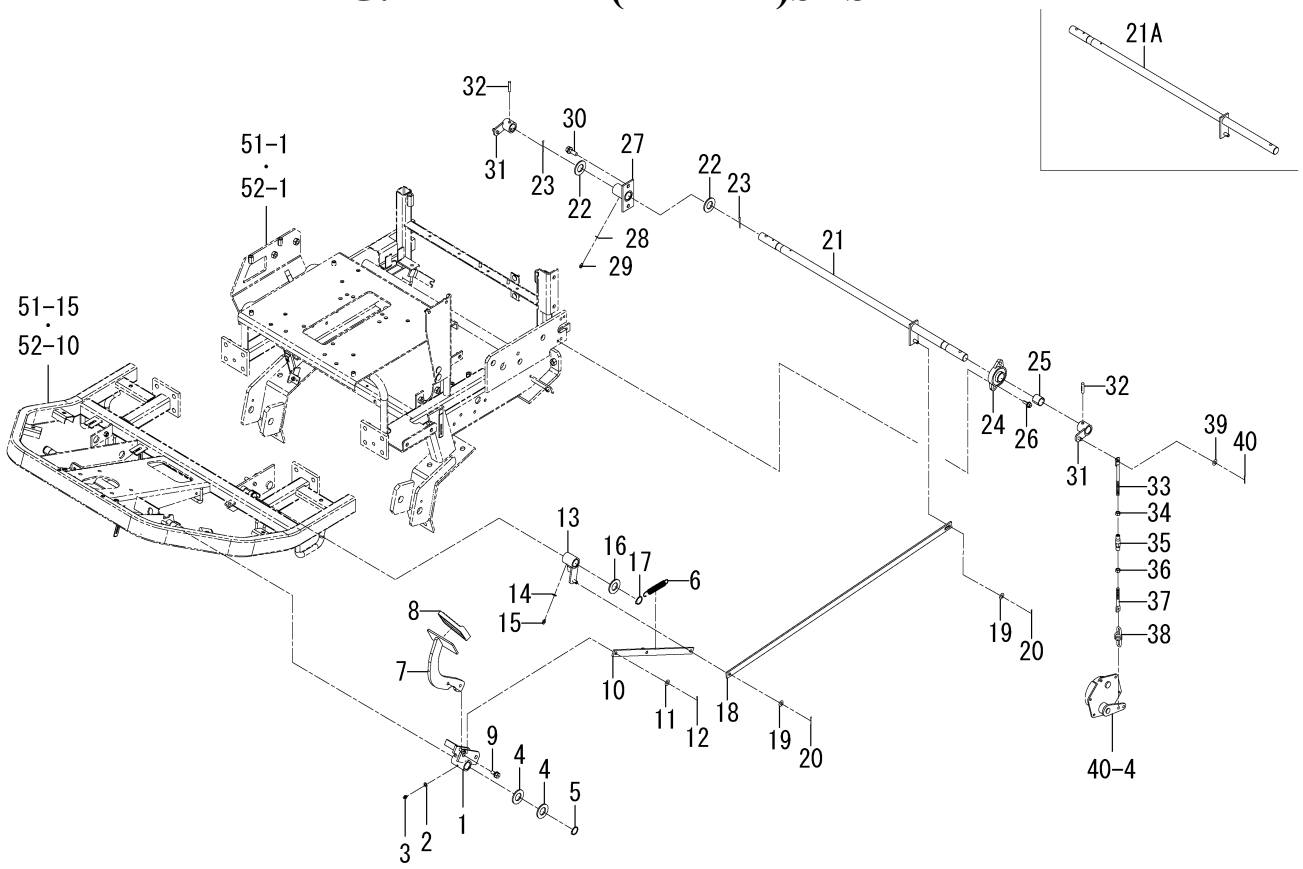


1832-312 -0100

| KEY | PART CODE | DESCRIPTION | SPC | TYPE OF MODEL | | ITC | COL | GRP | REMARKS |
|---|---|---|---|---|---|---|---|---|---|
| | | | | SF225F | SF237F | | | | |
| 30 | V211-561-002-00 | BOLT,S/M10X20/7T | * | 2 | 2 | | | | |
| 31 | 1832-312-260-00 | ARM/BRAKE/SHAFT COMP | * | 2 | 2 | | | | |
| 32 | V530-160-803-20 | PIN/GROOVE | * | 2 | 2 | | | | |
| 33 | 1742-504-004-00 | ROD/M08X120 | * | 2 | 2 | | | | |
| 34 | V304-260-008-00 | NUT/M8 | * | 2 | 2 | | | | |
| 35 | 1444-122-002-00 | TURNBUCKLE/M8 | * | 2 | 2 | | | | |
| 36 | 1560-132-007-30 | NUT/LH/M08 | * | 2 | 2 | | | | |
| 37 | 3104-210-004-10 | ROD/M08X72/LH | * | 2 | 2 | | | | |
| 38 | 2144-519-009-10 | SPRING/HE060 | * | 2 | 2 | | | | |
| 39 | V411-260-008-00 | WASHER,PL/M8 | * | 2 | 2 | | | | |
| 40 | V500-162-502-00 | PIN,SPLIT/2.5X20 | * | 2 | 2 | | | | |

# FIG. 42 BRAKE(PARKING)SYSTEM

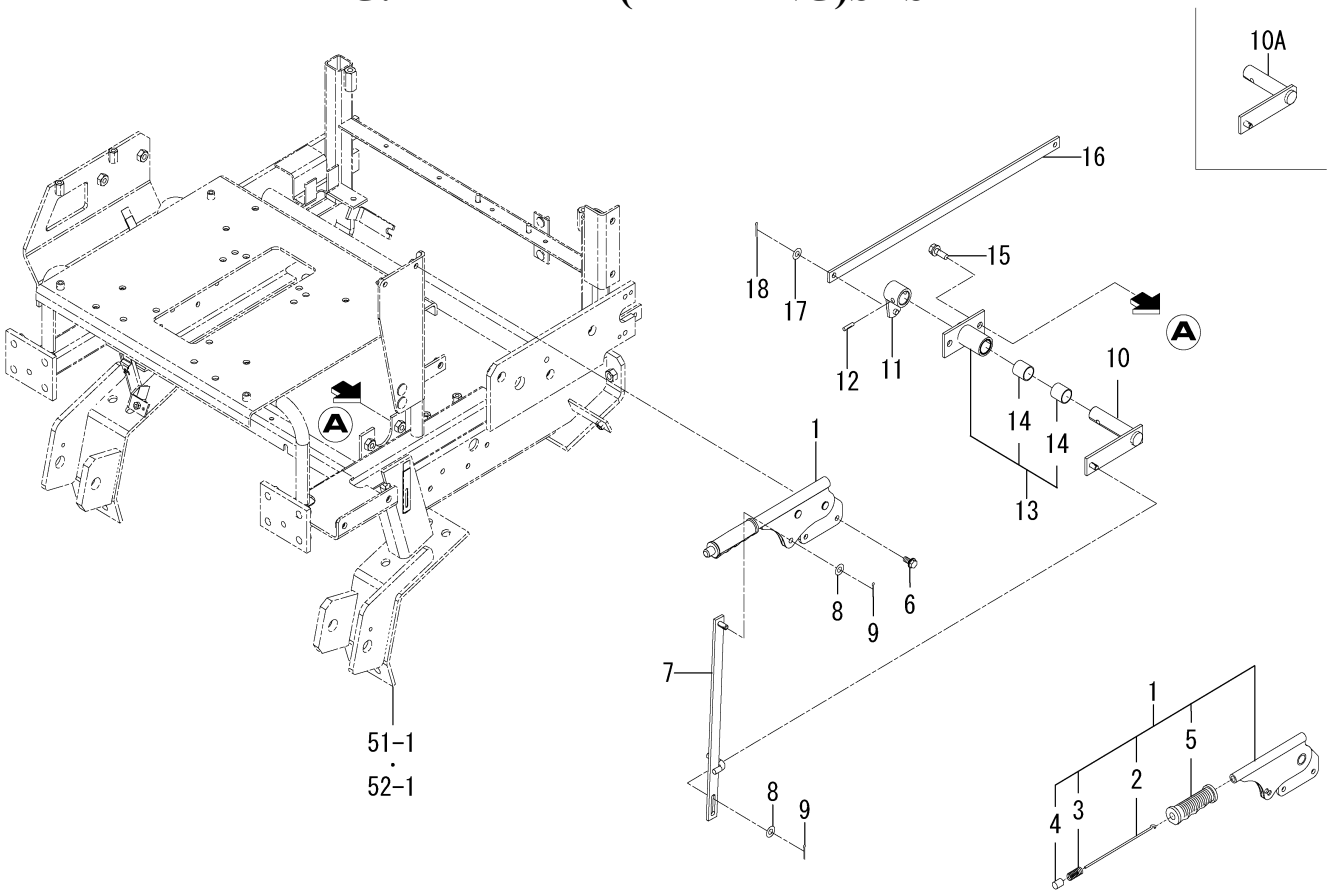


1832-313A-0100

| KEY | PART CODE | DESCRIPTION | SPC | TYPE OF MODEL | | ITC | COL | GRP | REMARKS |
|---|---|---|---|---|---|---|---|---|---|
| | | | | SF225F | SF237F | | | | |
| 1 | 1740-313-300-10 | LEVER/PARKING ASSY | * | 1 | 1 | | | | |
| 2 | 1442-313-202-00 | ROD | * | 1 | 1 | | | | |
| 3 | 1444-328-273-00 | SPRING | * | 1 | 1 | | | | |
| 4 | 1444-328-272-00 | BUTTON | * | 1 | 1 | | | | |
| 5 | 1740-313-301-00 | GRIP/ORANGE | * | 1 | 1 | | | | |
| 6 | V231-360-801-60 | FLANGEBOLT/M8X16 | * | 2 | 2 | | | | |
| 7 | 1832-313-600-00 | PLATE/PARKING COMP | * | 1 | 1 | | | | |
| 8 | V411-260-008-00 | WASHER,PL/M8 | * | 2 | 2 | | | | |
| 9 | V500-162-502-00 | PIN,SPLIT/2.5X20 | * | 2 | 2 | | | | |
| 10 | 1832-313-610-00 | ARM/PARKING COMP | * | 1 -8 | 1 -127 | | | | |
| 10A | 1832-313-610-10 | ARM/PARKING COMP | * | 1 9- | 1 128- | 1 | | | |
| 11 | 1832-312-260-00 | ARM/BRAKE/SHAFT COMP | * | 1 | 1 | | | | |
| 12 | V530-160-803-20 | PIN/GROOVE | * | 1 | 1 | | | | |
| 13 | 1832-313-230-00 | HUB/PARKING ASSY | * | 1 | 1 | | | | |
| 14 | 1725-433-202-10 | BUSH/22X25X25 | * | 2 | 2 | | | | |
| 15 | V211-561-002-50 | BOLT,S/M10X25/7T | * | 2 | 2 | | | | |
| 16 | 1832-313-001-10 | PLATE/I/19X517 | * | 1 | 1 | | | | |
| 17 | V411-260-008-00 | WASHER,PL/M8 | * | 1 | 1 | | | | |
| 18 | V500-162-502-00 | PIN,SPLIT/2.5X20 | * | 1 | 1 | | | | |

# FIG. 43 WHEEL(FRONT)SYSTEM

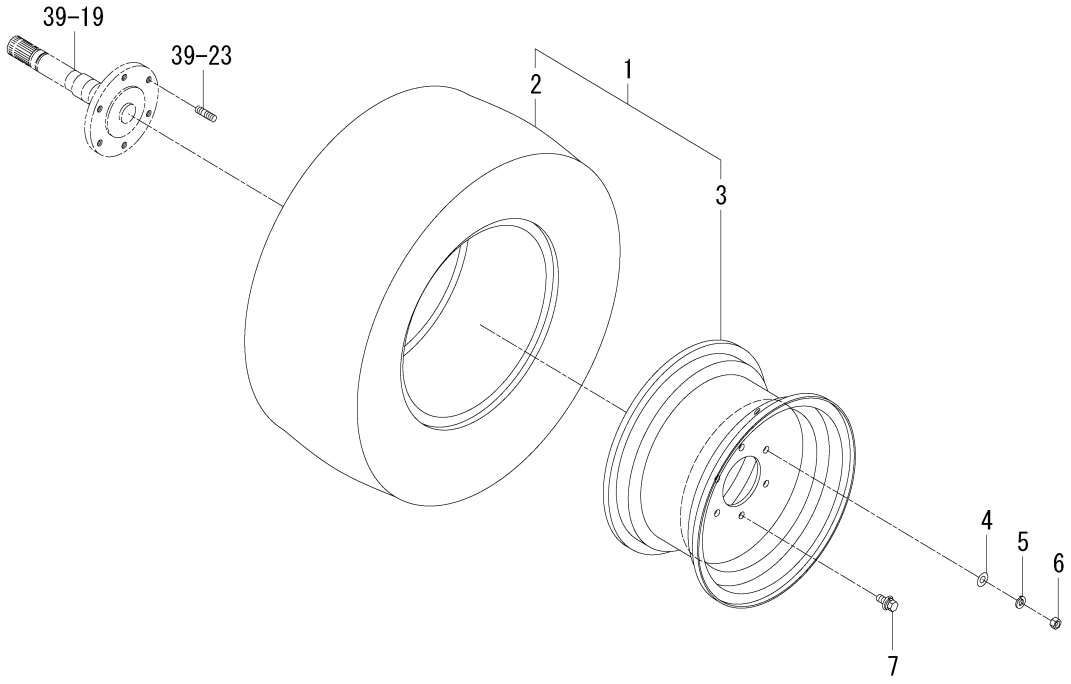


1832-317 -0100

| KEY | PART CODE | DESCRIPTION | SPC | TYPE OF MODEL | | ITC | COL | GRP | REMARKS |
|---|---|---|---|---|---|---|---|---|---|
| | | | | SF225F | SF237F | | | | |
| 1 | 1832-317-200-10 | TIRE/23X10.5-12 ASSY | * | 2 | 2 | | 6G | | |
| 2 | 1728-317-251-10 | TIRE/TURF/23X10.5-12 | * | 2 | 2 | | | | |
| 3 | 1832-317-230-00 | WHEEL/12XW7 COMP | * | 2 | 2 | | 6G | | |
| 4 | V411-260-010-00 | WASHER,PL/M10 | * | 4 | 4 | | | | |
| 5 | V401-160-010-00 | WASHER,SP/M10 | * | 4 | 4 | | | | |
| 6 | V304-460-010-00 | NUT/M10/7T | * | 4 | 4 | | | | |
| 7 | V211-661-002-50 | BOLT,SP/M10X25/7T | * | 8 | 8 | | | | |

# FIG. 44 WHEEL(STEERING)SYSTEM(237F)

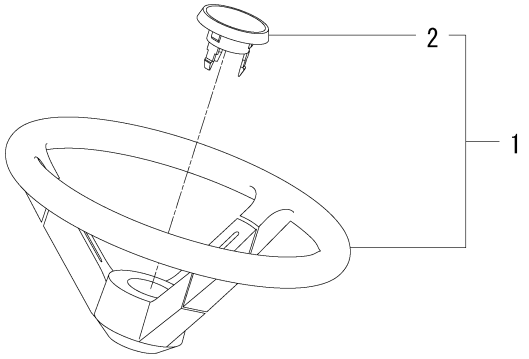


1773-401 -0100

| KEY | PART CODE | DESCRIPTION | SPC | TYPE OF MODEL | | ITC | COL | GRP | REMARKS |
|---|---|---|---|---|---|---|---|---|---|
| | | | | SF225F | SF237F | | | | |
| 1 | 1773-401-200-00 | WHEEL/STEERING/360 | * | | 1 | | | | |
| 2 | 1773-401-202-10 | CAP/WHEEL | * | | 1 | | | | |

# FIG. 45 WHEEL(STEERING)SYSTEM(225F)

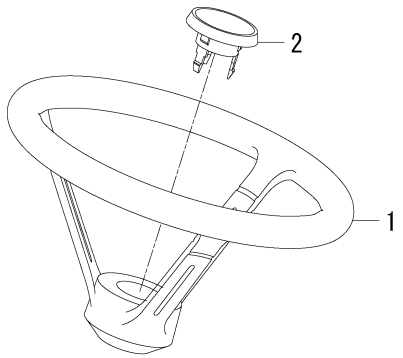


1739-401A-0100

| KEY | PART CODE | DESCRIPTION | SPC | TYPE OF MODEL | | ITC | COL | GRP | REMARKS |
|---|---|---|---|---|---|---|---|---|---|
| | | | | SF225F | SF237F | | | | |
| 1 | 1739-401-701-00 | WHEEL/STEERING | * | 1 | | | | | |
| 2 | 1773-401-202-10 | CAP/WHEEL | * | 1 | | | | | |

# FIG. 46 COLUMN(STEERING)SYSTEM(225F)

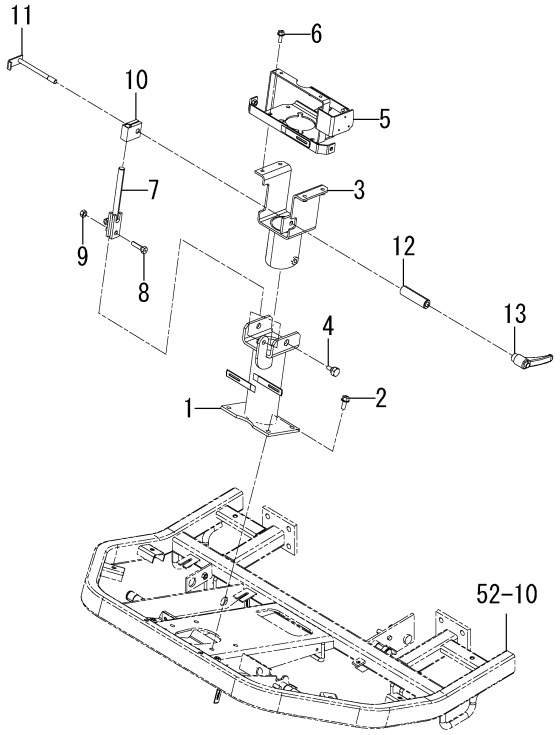


1832-405 -0100

| KEY | PART CODE | DESCRIPTION | SPC | TYPE OF MODEL | | ITC | COL | GRP | REMARKS |
|---|---|---|---|---|---|---|---|---|---|
| | | | | SF225F | SF237F | | | | |
| 1 | 1832-405-210-00 | COLUMN/STEERING/LOWE | * | 1 | | | | | |
| 2 | V231-361-002-00 | FLANGEBOLT/M10X20 | * | 4 | | | | | |
| 3 | 1832-405-230-20 | COLUMN/STEERING/UPPE | * | 1 | | | | | |
| 4 | 1809-405-003-00 | BOLT/M10X21 | * | 2 | | | | | |
| 5 | 1832-405-240-10 | BRACKET/COVER COMP | * | 1 | | | | | |
| 6 | V231-360-801-60 | FLANGEBOLT/M8X16 | * | 4 | | | | | |
| 7 | 1832-405-260-10 | BAR/ROCK COMP | * | 1 | | | | | |
| 8 | V201-261-003-50 | BOLT/M10X35 | * | 1 | | | | | |
| 9 | V304-260-010-00 | NUT/M10 | * | 1 | | | | | |
| 10 | 1809-405-004-20 | STAY/ROCK | * | 1 | | | | | |
| 11 | 1832-405-250-00 | ROD/127 COMP | * | 1 | | | | | |
| 12 | 1832-405-001-10 | COLLAR/12X22X80 | * | 1 | | | | | |
| 13 | 1809-405-008-00 | LEVER/TILT | * | 1 | | | | | |

# FIG. 47 COLUMN(STEERING)SYSTEM(237F)

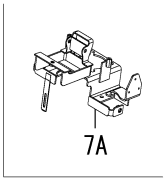


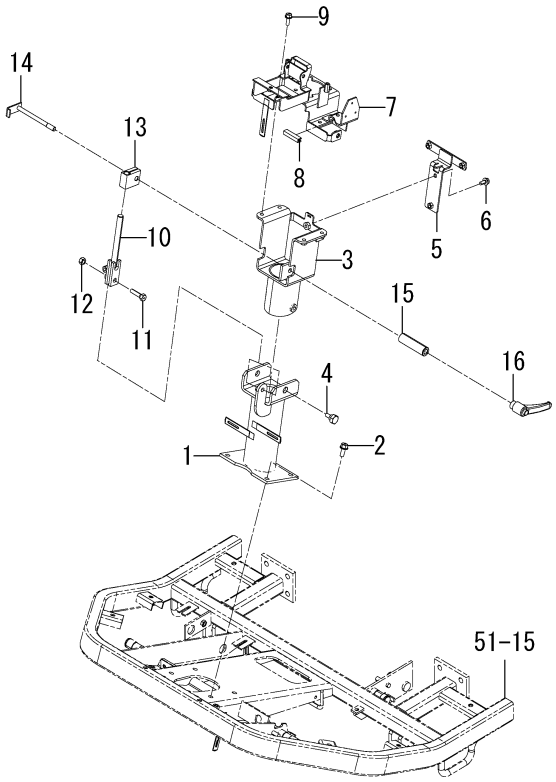


1832-405A-0100

| KEY | PART CODE | DESCRIPTION | SPC | TYPE OF MODEL | | ITC | COL | GRP | REMARKS |
|---|---|---|---|---|---|---|---|---|---|
| | | | | SF225F | SF237F | | | | |
| 1 | 1832-405-210-00 | COLUMN/STEERING/LOWE | * | | 1 | | | | |
| 2 | V231-361-002-00 | FLANGEBOLT/M10X20 | * | | 4 | | | | |
| 3 | 1832-405-620-00 | COLUMN/STEERING/UPPE | * | | 1 | | | | |
| 4 | 1809-405-003-00 | BOLT/M10X21 | * | | 2 | | | | |
| 5 | 1832-405-630-00 | STAY/COVER COMP | * | | 1 | | | | |
| 6 | V231-360-801-60 | FLANGEBOLT/M8X16 | * | | 1 | | | | |
| 7 | 1832-405-610-00 | BRACKET/COVER COMP | * | | 1 -342 | | | | |
| 7A | 1832-405-610-10 | BRACKET/COVER COMP | * | | 1 343- | 1 | | | |
| 8 | 3666-202-005-10 | PAD/50 | * | | 1 | | | | |
| 9 | V231-360-801-60 | FLANGEBOLT/M8X16 | * | | 4 | | | | |
| 10 | 1832-405-260-10 | BAR/ROCK COMP | * | | 1 | | | | |
| 11 | V201-261-003-50 | BOLT/M10X35 | * | | 1 | | | | |
| 12 | V304-260-010-00 | NUT/M10 | * | | 1 | | | | |
| 13 | 1809-405-004-20 | STAY/ROCK | * | | 1 | | | | |
| 14 | 1832-405-250-00 | ROD/127 COMP | * | | 1 | | | | |
| 15 | 1832-405-001-10 | COLLAR/12X22X80 | * | | 1 | | | | |
| 16 | 1809-405-008-00 | LEVER/TILT | * | | 1 | | | | |

# FIG. 48 CONTROLLER(STEERING)SET SYSTEM (225F-NO.1-515/237F-NO.1-797)

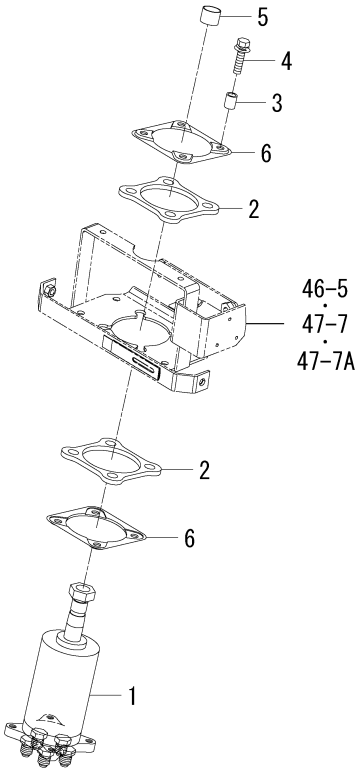


1771-407 -0100

| KEY | PART CODE | DESCRIPTION | SPC | TYPE OF MODEL | | ITC | COL | GRP | REMARKS |
|---|---|---|---|---|---|---|---|---|---|
| | | | | SF225F | SF237F | | | | |
| 1 | 1771-407-200-00 | CONTROLLER/STEERING | * | 1 -515 | 1 -797 | | | | |
| 2 | 1771-407-001-10 | PAD/PS | * | 2 -515 | 2 -797 | | | | |
| 3 | 1739-407-074-00 | COLLAR/08X12X15 | * | 4 -515 | 4 -797 | | | | |
| 4 | V211-660-803-50 | BOLT,SP/M8X35/7T | * | 4 -515 | 4 -797 | | | | |
| 5 | 1739-401-001-00 | INSULATOR/15 | * | 1 -515 | 1 -797 | | | | |
| 6 | 1728-407-076-10 | PLATE/CONTROLLER | * | 2 -515 | 2 -797 | | | | |

# FIG. 49 CYLINDER(STEERING)SYSTEM (225F-NO.516-/237F-NO.798-)

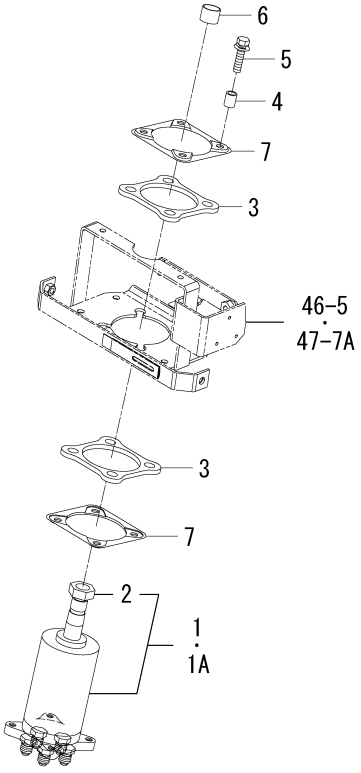


1832-407 -0100

| KEY | PART CODE | DESCRIPTION | SPC | TYPE OF MODEL | | ITC | COL | GRP | REMARKS |
|---|---|---|---|---|---|---|---|---|---|
| | | | | SF225F | SF237F | | | | |
| 1 | 1832-407-900-00 | CONTROLLER/STEERING | * | 1 -614 | 1 -943 | | | | |
| 1A | 1832-407-900-10 | CONTROLLER/STEERING | * | 1 615- | 1 944- | 1 | | | |
| 2 | 2522-410-301-00 | NUT/M16 | * | 1 615- | 1 944- | | | | |
| 3 | 1771-407-001-10 | PAD/PS | * | 2 516- | 2 798- | | | | |
| 4 | 1739-407-074-00 | COLLAR/08X12X15 | * | 4 516- | 4 798- | | | | |
| 5 | V211-660-803-50 | BOLT,SP/M8X35/7T | * | 4 516- | 4 798- | | | | |
| 6 | 1739-401-001-00 | INSULATOR/15 | * | 1 516- | 1 798- | | | | |
| 7 | 1728-407-076-10 | PLATE/CONTROLLER | * | 2 516- | 2 798- | | | | |

# FIG. 50 CYLINDER(STEERING)SYSTEM

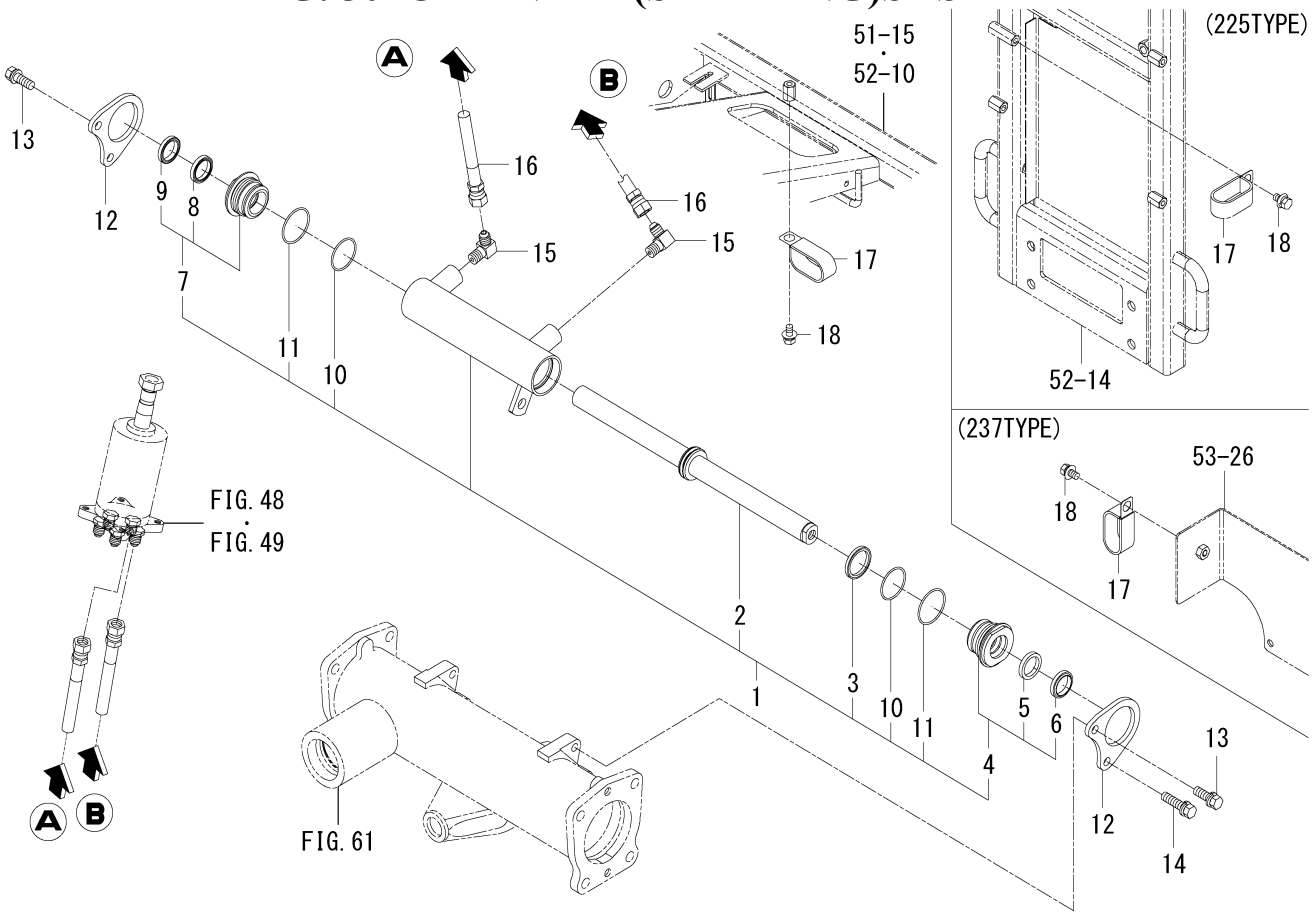


1832-408A-0100

| KEY | PART CODE | DESCRIPTION | SPC | TYPE OF MODEL | | ITC | COL | GRP | REMARKS |
|---|---|---|---|---|---|---|---|---|---|
| | | | | SF225F | SF237F | | | | |
| 1 | K167-005-000-20 | CYLINDER ASSY | * | 1 | 1 | | | | |
| 2 | K167-005-200-10 | ROD/PISTON | * | 1 | 1 | | | | |
| 3 | K167-005-001-10 | PACKING/PISTON | * | 1 | 1 | | | | |
| 4 | K167-005-300-10 | COVER/ROD/A SET | * | 1 | 1 | | | | |
| 5 | K182-034-002-00 | ROD PACKING | * | 1 | 1 | | | | |
| 6 | K182-034-003-00 | DUST SEAL | * | 1 | 1 | | | | |
| 7 | K167-005-310-10 | COVER/ROD/B SET | * | 1 | 1 | | | | |
| 8 | K182-034-002-00 | ROD PACKING | * | 1 | 1 | | | | |
| 9 | K182-034-003-00 | DUST SEAL | * | 1 | 1 | | | | |
| 10 | V723-112-003-80 | O-RING/1B,S38 | * | 2 | 2 | | | | |
| 11 | V723-102-004-20 | O-RING/1A,S42 | * | 2 | 2 | | | | |
| 12 | 1832-408-001-00 | STAY/CYLINDER | * | 2 | 2 | | | | |
| 13 | V211-561-003-00 | BOLT,S/M10X30/7T | * | 3 | 3 | | | | |
| 14 | V211-561-004-00 | BOLT,S/M10X40/7T | * | 1 | 1 | | | | |
| 15 | 1728-408-001-00 | ADAPTER/L/G1/4XR1/4 | * | 2 | 2 | | | | |
| 16 | 1832-408-610-00 | HOSE/HYDRO/3200 ASSY | * | 2 | 2 | | | | |
| 17 | 3650-261-001-00 | CLAMP/28X55 | * | 2 | 2 | | | | |
| 18 | V211-660-801-60 | BOLT,SP/M8X16/7T | * | 2 | 2 | | | | |

# FIG. 51 FRAME SYSTEM(237F)

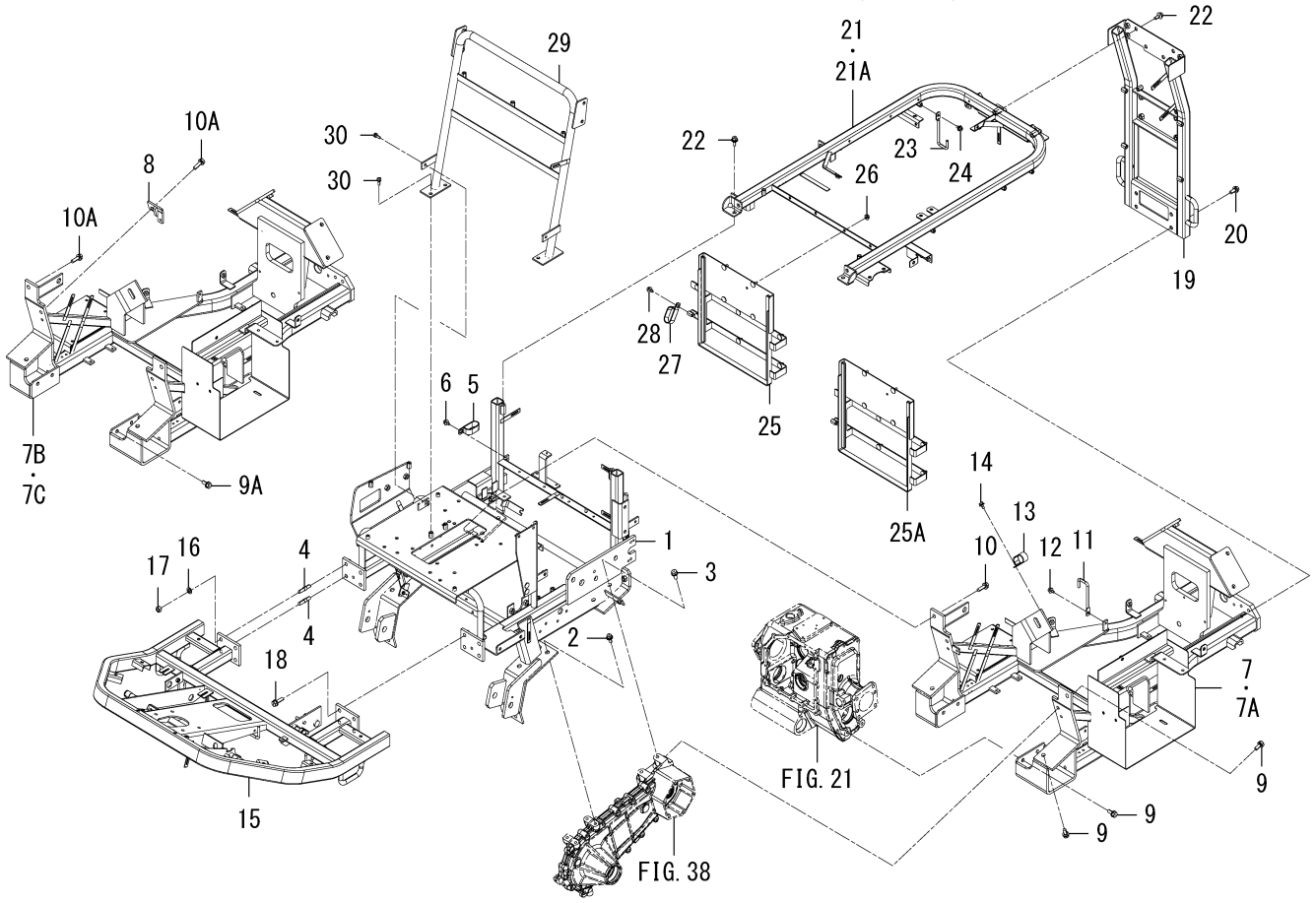


1832-410C-0100

| KEY | PART CODE | DESCRIPTION | SPC | TYPE OF MODEL | | ITC | COL | GRP | REMARKS |
|---|---|---|---|---|---|---|---|---|---|
| | | | | SF225F | SF237F | | | | |
| 1 | 1832-410-630-10 | FRAME/MAIN/237 COMP | * | | 1 | 1 | | | |
| 2 | V211-661-002-50 | BOLT,SP/M10X25/7T | * | | 12 | | | | |
| 3 | 6901-931-225-00 | BOLT,SEMS/M12X25/7T | * | | 4 | | | | |
| 4 | V251-341-203-20 | STUD/M12X32/7T | * | | 2 | | | | |
| 5 | 3650-261-001-00 | CLAMP/28X55 | * | | 1 | | | | |
| 6 | V211-360-801-60 | BOLT,SP/M8X16 | * | | 1 | | | | |
| 7 | 1832-410-650-10 | FRAME/LOWER/237 COMP | * | | 1 -269 | 1 | | | |
| 7A | 1832-410-650-20 | FRAME/LOWER/237 COMP | * | | 1 -375 | 3 | | | |
| 7B | 1832-410-650-30 | FRAME/LOWER/237 COMP | * | | 1 -1072 | 3 | | | |
| 7C | 1832-410-650-40 | FRAME/LOWER/237 COMP | * | | 1 1073- | 3 | | | |
| 8 | 1832-410-690-00 | PLATE/STAY/ROD COMP | * | | 1 376- | | | | |
| 9 | 6901-931-225-00 | BOLT,SEMS/M12X25/7T | * | | 8 -375 | | | | |
| 9A | 6901-931-225-00 | BOLT,SEMS/M12X25/7T | * | | 7 376- | | | | |
| 10 | 6901-931-235-00 | BOLT,SEMS/M12X35/7T | * | | 2 -375 | | | | |
| 10A | 6901-931-235-00 | BOLT,SEMS/M12X35/7T | * | | 3 376- | | | | |
| 11 | 1832-410-061-00 | GUIDE/HOSE | * | | 1 | | | | |
| 12 | V211-360-801-60 | BOLT,SP/M8X16 | * | | 1 | | | | |
| 13 | 3650-261-001-00 | CLAMP/28X55 | * | | 1 | | | | |
| 14 | V211-360-801-60 | BOLT,SP/M8X16 | * | | 1 | | | | |
| 15 | 1832-410-680-00 | FRAME/FLOOR COMP | * | | 1 | | | | |
| 16 | V401-160-012-00 | WASHER,SP/M12 | * | | 2 | | | | |
| 17 | V304-460-012-00 | NUT/M12/7T | * | | 2 | | | | |
| 18 | 6901-931-235-00 | BOLT,SEMS/M12X35/7T | * | | 6 | | | | |
| 19 | 1832-410-620-00 | FRAME/REAR/237 COMP | * | | 1 | | | | |
| 20 | 6901-931-225-00 | BOLT,SEMS/M12X25/7T | * | | 4 | | | | |
| 21 | 1832-410-610-20 | FRAME/UPPER COMP | * | | 1 -442 | 1 | | | |
| 21A | 1832-410-610-30 | FRAME/UPPER COMP | * | | 1 443- | 3 | | | |
| 22 | V211-661-002-50 | BOLT,SP/M10X25/7T | * | | 4 | | | | |
| 23 | 1832-410-061-00 | GUIDE/HOSE | * | | 1 | | | | |
| 24 | V211-360-801-60 | BOLT,SP/M8X16 | * | | 1 | | | | |

# FIG. 51 FRAME SYSTEM(237F)

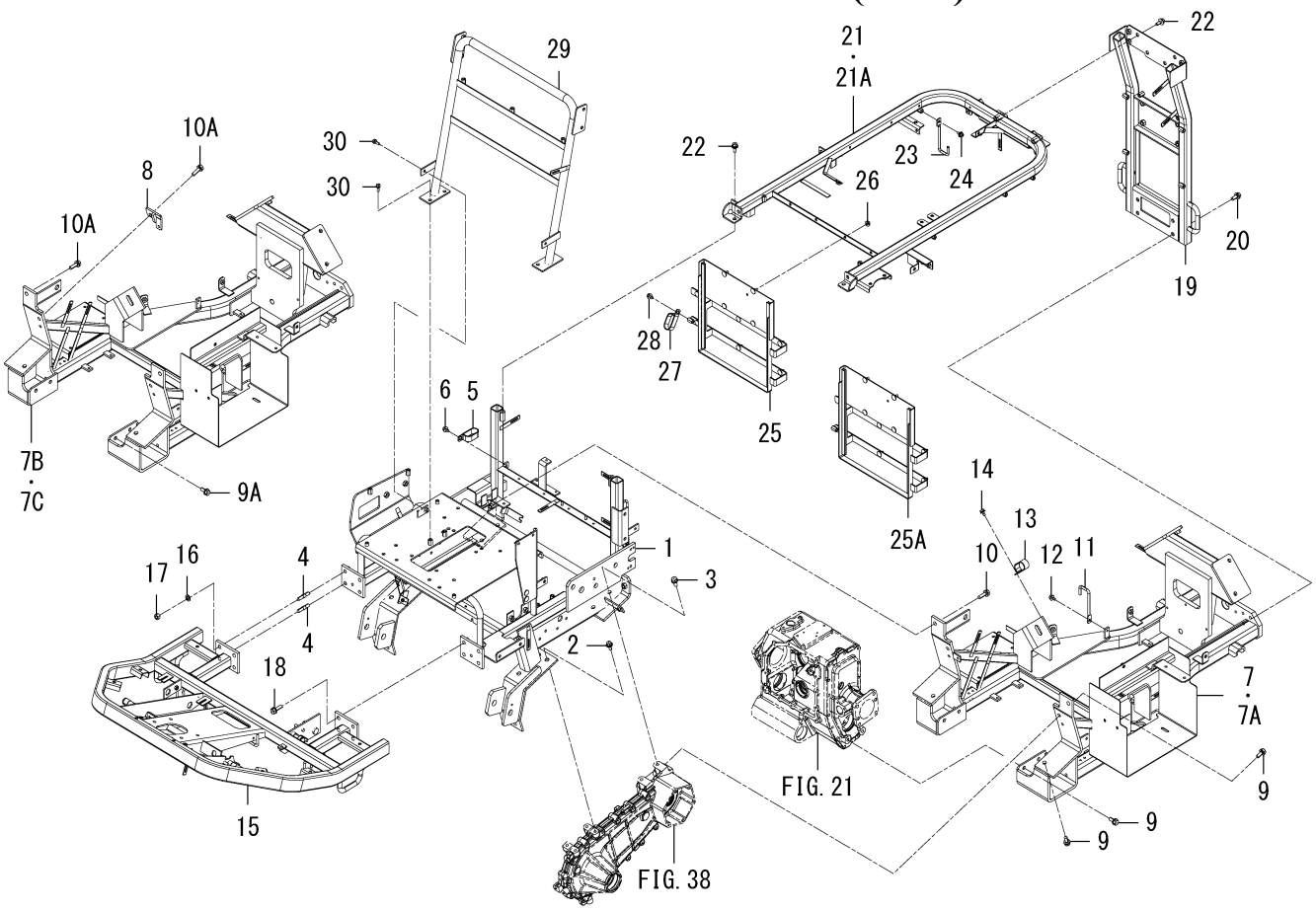


1832-410C-0100

| KEY | PART CODE | DESCRIPTION | SPC | TYPE OF MODEL | | ITC | COL | GRP | REMARKS |
|---|---|---|---|---|---|---|---|---|---|
| | | | | SF225F | SF237F | | | | |
| 25 | 1832-410-640-00 | FRAME/OILCOOLER/237 | * | | 1 -765 | | | | |
| 25A | 1832-410-640-10 | FRAME/OILCOOLER/237 | * | | 1 766- | 1 | | | |
| 26 | V362-260-008-00 | NUT/WASHER/M8 | * | | 2 | | | | |
| 27 | 3650-261-001-00 | CLAMP/28X55 | * | | 1 | | | | |
| 28 | V211-360-801-60 | BOLT,SP/M8X16 | * | | 1 | | | | |
| 29 | 1832-410-670-00 | STAY/GUARD/CONTAINER | * | | 1 | | | | |
| 30 | V211-660-802-00 | BOLT,SP/M8X20/7T | * | | 6 | | | | |

# FIG. 52 FRAME SYSTEM(225F)

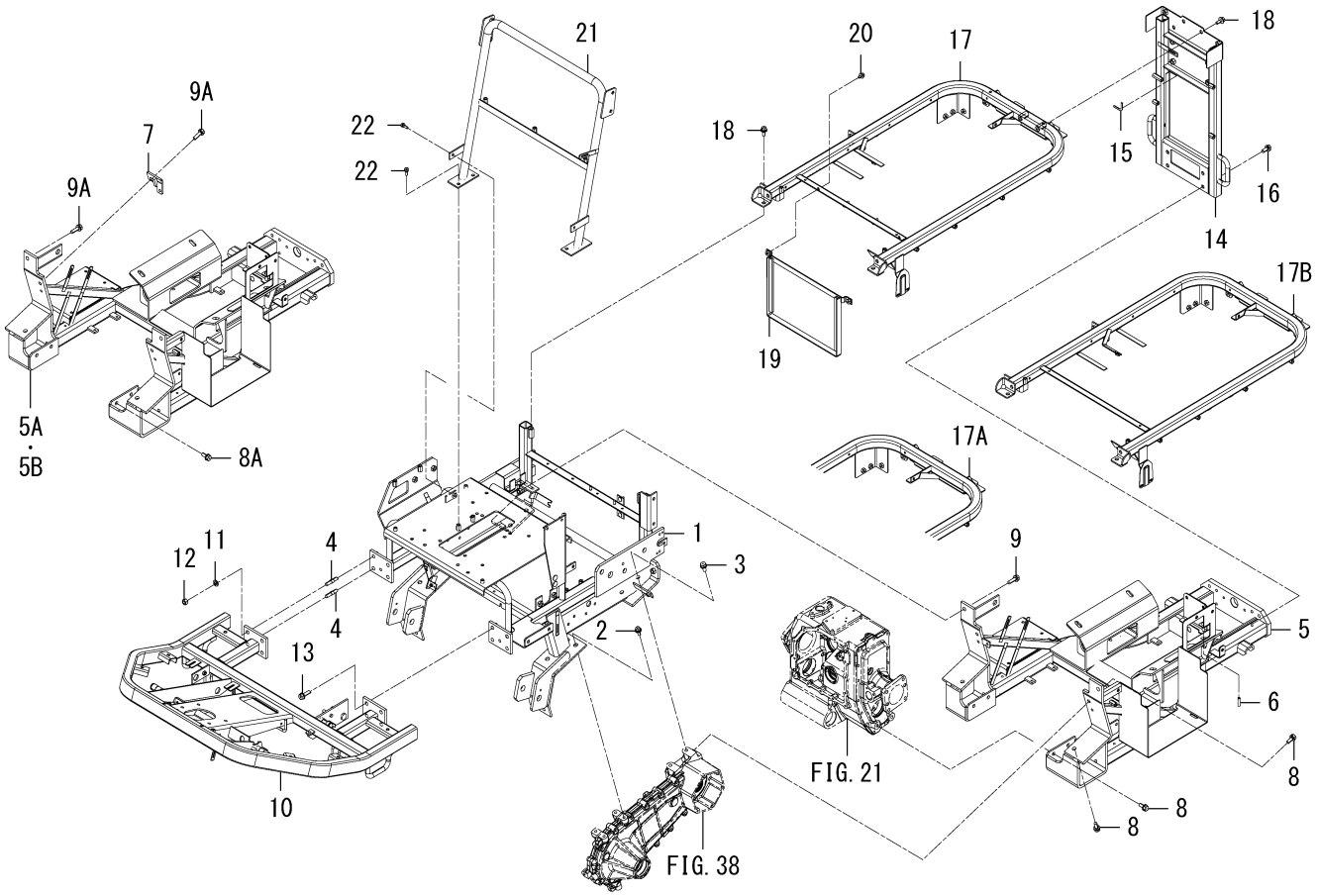


1832-410D-0100

| KEY | PART CODE | DESCRIPTION | SPC | TYPE OF MODEL | | ITC | COL | GRP | REMARKS |
|---|---|---|---|---|---|---|---|---|---|
| | | | | SF225F | SF237F | | | | |
| 1 | 1832-410-750-10 | FRAME/MAIN COMP | * | 1 | | 1 | | | |
| 2 | V211-661-002-50 | BOLT,SP/M10X25/7T | * | 12 | | | | | |
| 3 | 6901-931-225-00 | BOLT,SEMS/M12X25/7T | * | 4 | | | | | |
| 4 | V251-341-203-20 | STUD/M12X32/7T | * | 2 | | | | | |
| 5 | 1832-410-740-10 | FRAME/LOWER COMP | * | 1 -86 | | 1 | | | |
| 5A | 1832-410-740-20 | FRAME/LOWER COMP | * | 1 -729 | | 3 | | | |
| 5B | 1832-410-740-30 | FRAME/LOWER COMP | * | 1 730- | | 3 | | | |
| 6 | 1716-601-009-00 | TUBE/07X09X30 | * | 1 | | | | | |
| 7 | 1832-410-690-00 | PLATE/STAY/ROD COMP | * | 1 87- | | | | | |
| 8 | 6901-931-225-00 | BOLT,SEMS/M12X25/7T | * | 8 -86 | | | | | |
| 8A | 6901-931-225-00 | BOLT,SEMS/M12X25/7T | * | 7 87- | | | | | |
| 9 | 6901-931-235-00 | BOLT,SEMS/M12X35/7T | * | 2 -86 | | | | | |
| 9A | 6901-931-235-00 | BOLT,SEMS/M12X35/7T | * | 3 87- | | | | | |
| 10 | 1832-410-680-00 | FRAME/FLOOR COMP | * | 1 | | | | | |
| 11 | V401-160-012-00 | WASHER,SP/M12 | * | 2 | | | | | |
| 12 | V304-460-012-00 | NUT/M12/7T | * | 2 | | | | | |
| 13 | 6901-931-235-00 | BOLT,SEMS/M12X35/7T | * | 6 | | | | | |
| 14 | 1832-410-720-00 | FRAME/REAR/225 COMP | * | 1 | | | | | |
| 15 | 1760-604-001-00 | INSULATOR | * | 1 | | | | | |
| 16 | 6901-931-225-00 | BOLT,SEMS/M12X25/7T | * | 4 | | | | | |
| 17 | 1832-410-710-10 | FRAME/UPPER/225 COMP | * | 1 -110 | | 1 | | | |
| 17A | 1832-410-710-20 | FRAME/UPPER/225 COMP | * | 1 -816 | | 3 | | | |
| 17B | 1832-410-710-30 | FRAME/UPPER/225 COMP | * | 1 817- | | 3 | | | |
| 18 | V211-661-002-50 | BOLT,SP/M10X25/7T | * | 4 | | | | | |
| 19 | 1832-410-730-00 | FRAME/OILCOOLER/225 | * | 1 | | | | | |
| 20 | V211-360-801-60 | BOLT,SP/M8X16 | * | 2 | | | | | |
| 21 | 1832-410-450-20 | STAY/GUARD/CONTAINER | * | 1 | | | | | |
| 22 | V211-660-802-00 | BOLT,SP/M8X20/7T | * | 6 | | | | | |
| | | | | | | | | | |
| | | | | | | | | | |

# FIG. 53 COVER(SIDE)SYSTEM(237F-B TYPE)

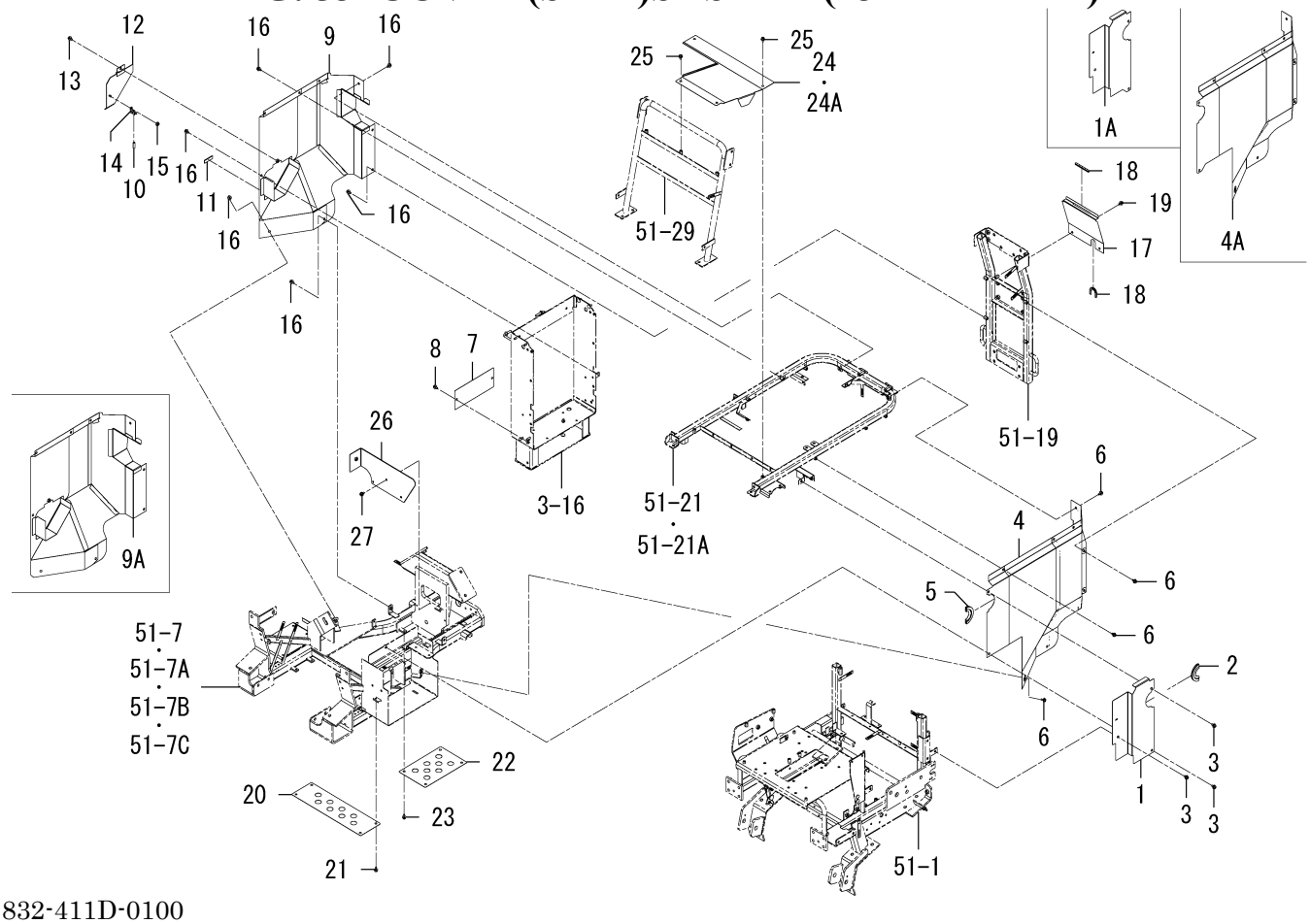


1832-411D-0100

| KEY | PART CODE | DESCRIPTION | SPC | TYPE OF MODEL | | ITC | COL | GRP | REMARKS |
|---|---|---|---|---|---|---|---|---|---|
| | | | | SF225F | SF237F | | | | |
| 1 | 1832-411-066-00 | COVER/FRONT/LH | * | | 1 -269 | | | | |
| 1A | 1832-411-066-10 | COVER/FRONT/LH | * | | 1 270- | 3 | | | |
| 2 | 1704-112-001-00 | INSULATOR/115 | * | | 1 | | | | |
| 3 | V211-360-801-60 | BOLT,SP/M8X16 | * | | 3 | | | | |
| 4 | 1832-411-630-00 | COVER/SIDE/LH COMP | * | | 1 -269 | | | | |
| 4A | 1832-411-630-10 | COVER/SIDE/LH COMP | * | | 1 270- | 3 | | | |
| 5 | 1704-112-001-00 | INSULATOR/115 | * | | 1 | | | | |
| 6 | V211-360-801-60 | BOLT,SP/M8X16 | * | | 8 | | | | |
| 7 | 1832-411-064-00 | COVER/RADIATOR/UNDER | * | | 1 | | | | |
| 8 | V211-360-801-60 | BOLT,SP/M8X16 | * | | 2 | | | | |
| 9 | 1832-411-640-00 | COVER/SIDE/RH COMP | * | | 1 -23 | | | | |
| 9A | 1832-411-640-10 | COVER/SIDE/RH COMP | * | | 1 24- | 1 | | | |
| 10 | 1716-601-009-00 | TUBE/07X09X30 | * | | 1 | | | | |
| 11 | 1752-606-004-00 | INSULATOR/15X55X03 | * | | 1 | | | | |
| 12 | 1832-411-650-00 | COVER/OILGAUGE COMP | * | | 1 | | | | |
| 13 | V211-360-801-60 | BOLT,SP/M8X16 | * | | 1 | | | | |
| 14 | 3610-631-002-00 | HANGER,SUPPORT | * | | 1 | | | | |
| 15 | V362-260-008-00 | NUT/WASHER/M8 | * | | 1 | | | | |
| 16 | V211-360-801-60 | BOLT,SP/M8X16 | * | | 9 | | | | |
| 17 | 1832-411-061-00 | COVER/REAR/UPPER | * | | 1 | | | | |
| 18 | 1685-604-003-00 | INSULATOR/90 | * | | 2 | | | | |
| 19 | V211-360-801-60 | BOLT,SP/M8X16 | * | | 2 | | | | |
| 20 | 1832-411-003-00 | GUARD/UNDER/FRONT | * | | 1 | | | | |
| 21 | V211-360-801-60 | BOLT,SP/M8X16 | * | | 4 | | | | |
| 22 | 1832-411-004-00 | GUARD/UNDER/REAR | * | | 1 | | | | |
| 23 | V211-360-801-60 | BOLT,SP/M8X16 | * | | 4 | | | | |
| 24 | 1832-411-063-00 | COVER/CHUTE/SIDE | * | | 1 -289 | | | | |
| 24A | 1832-411-063-10 | COVER/CHUTE/SIDE | * | | 1 290- | 1 | | | |
| 25 | V211-360-801-60 | BOLT,SP/M8X16 | * | | 4 | | | | |
| 26 | 1832-411-660-00 | COVER/FLYWHEEL COMP | * | | 1 | | | | |

# FIG. 53 COVER(SIDE)SYSTEM(237F-B TYPE)

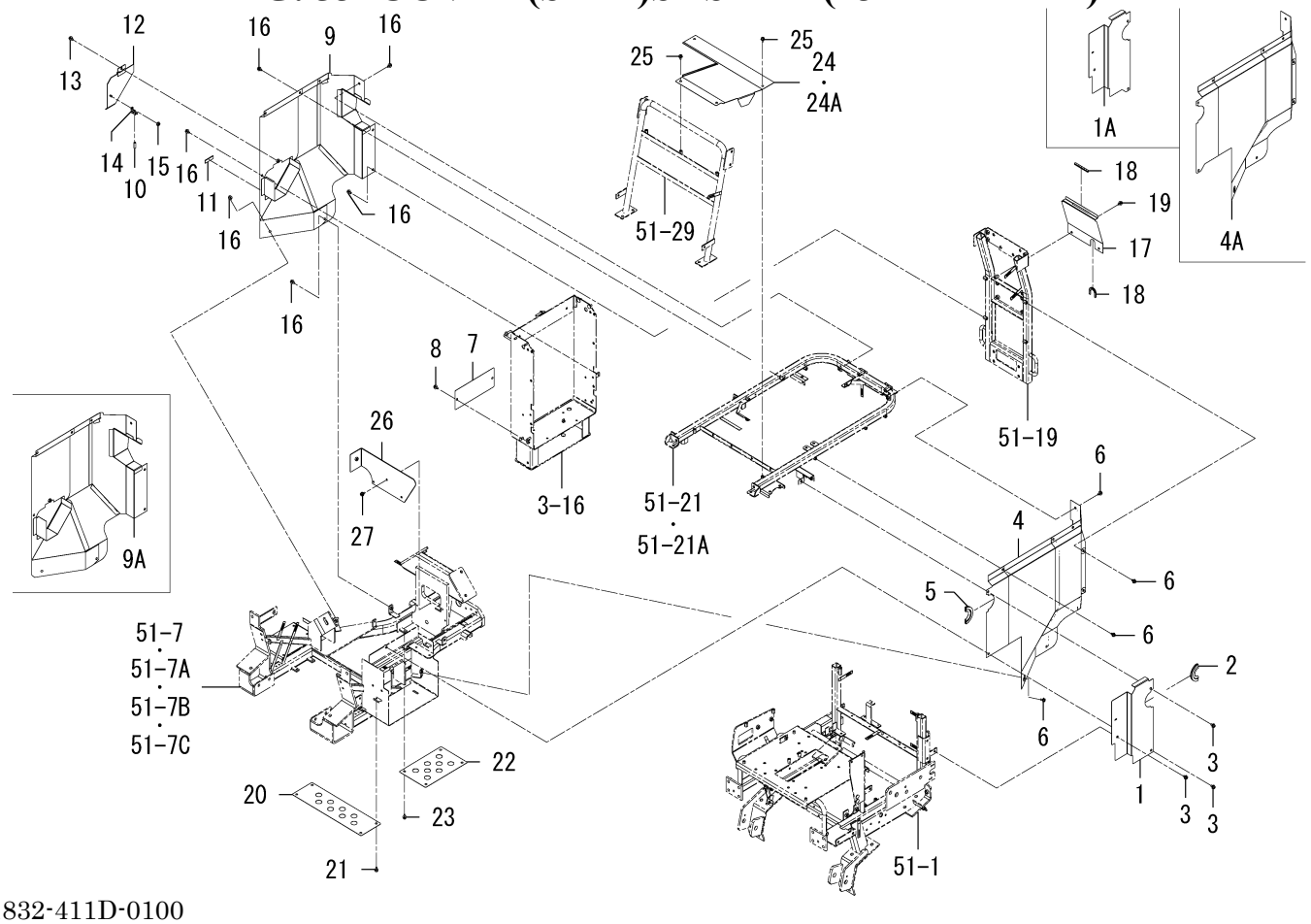


1832-411D-0100

| KEY | PART CODE | DESCRIPTION | SPC | TYPE OF MODEL | | ITC | COL | GRP | REMARKS |
|---|---|---|---|---|---|---|---|---|---|
| | | | | SF225F | SF237F | | | | |
| 27 | V211-360-801-60 | BOLT,SP/M8X16 | * | | 2 | | | | |

# FIG. 54 COVER(SIDE)SYSTEM(237F EXCEPT B)

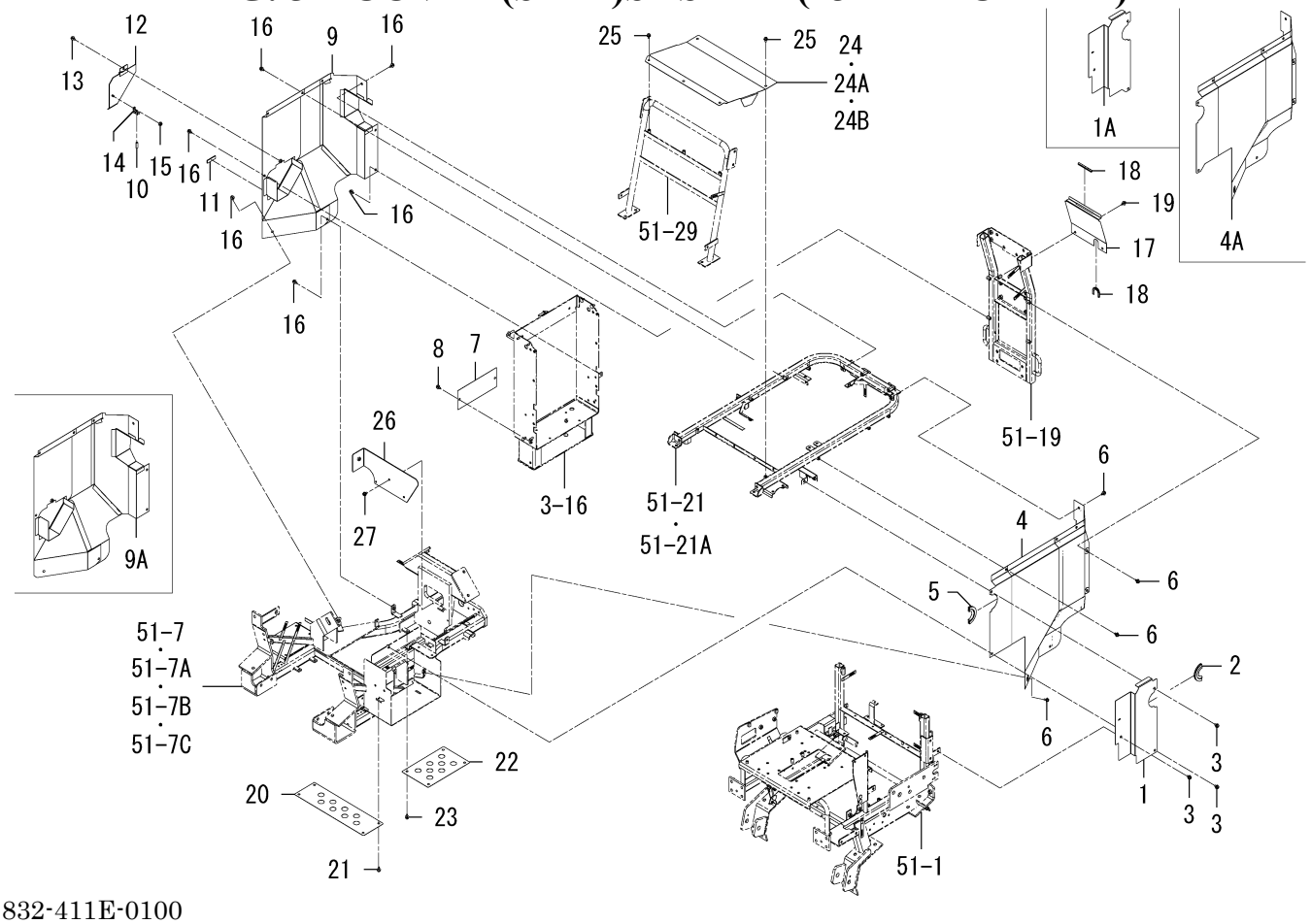


1832-411E-0100

| KEY | PART CODE | DESCRIPTION | SPC | TYPE OF MODEL | | ITC | COL | GRP | REMARKS |
|---|---|---|---|---|---|---|---|---|---|
| | | | | SF225F | SF237F | | | | |
| 1 | 1832-411-066-00 | COVER/FRONT/LH | * | | 1 -269 | | | | |
| 1A | 1832-411-066-10 | COVER/FRONT/LH | * | | 1 270- | 3 | | | |
| 2 | 1704-112-001-00 | INSULATOR/115 | * | | 1 | | | | |
| 3 | V211-360-801-60 | BOLT,SP/M8X16 | * | | 3 | | | | |
| 4 | 1832-411-630-00 | COVER/SIDE/LH COMP | * | | 1 -269 | | | | |
| 4A | 1832-411-630-10 | COVER/SIDE/LH COMP | * | | 1 270- | 3 | | | |
| 5 | 1704-112-001-00 | INSULATOR/115 | * | | 1 | | | | |
| 6 | V211-360-801-60 | BOLT,SP/M8X16 | * | | 8 | | | | |
| 7 | 1832-411-064-00 | COVER/RADIATOR/UNDER | * | | 1 | | | | |
| 8 | V211-360-801-60 | BOLT,SP/M8X16 | * | | 2 | | | | |
| 9 | 1832-411-640-00 | COVER/SIDE/RH COMP | * | | 1 -23 | | | | |
| 9A | 1832-411-640-10 | COVER/SIDE/RH COMP | * | | 1 24- | 1 | | | |
| 10 | 1716-601-009-00 | TUBE/07X09X30 | * | | 1 | | | | |
| 11 | 1752-606-004-00 | INSULATOR/15X55X03 | * | | 1 | | | | |
| 12 | 1832-411-650-00 | COVER/OILGAUGE COMP | * | | 1 | | | | |
| 13 | V211-360-801-60 | BOLT,SP/M8X16 | * | | 1 | | | | |
| 14 | 3610-631-002-00 | HANGER,SUPPORT | * | | 1 | | | | |
| 15 | V362-260-008-00 | NUT/WASHER/M8 | * | | 1 | | | | |
| 16 | V211-360-801-60 | BOLT,SP/M8X16 | * | | 9 | | | | |
| 17 | 1832-411-061-00 | COVER/REAR/UPPER | * | | 1 | | | | |
| 18 | 1685-604-003-00 | INSULATOR/90 | * | | 2 | | | | |
| 19 | V211-360-801-60 | BOLT,SP/M8X16 | * | | 2 | | | | |
| 20 | 1832-411-003-00 | GUARD/UNDER/FRONT | * | | 1 | | | | |
| 21 | V211-360-801-60 | BOLT,SP/M8X16 | * | | 4 | | | | |
| 22 | 1832-411-004-00 | GUARD/UNDER/REAR | * | | 1 | | | | |
| 23 | V211-360-801-60 | BOLT,SP/M8X16 | * | | 4 | | | | |
| 24 | 1832-411-068-00 | COVER/CHUTE/SIDE/W | * | | 1 -17 | | | | |
| 24A | 1832-411-068-10 | COVER/CHUTE/SIDE/W | * | | 1 -342 | 1 | | | |
| 24B | 1832-411-068-20 | COVER/CHUTE/SIDE/W | * | | 1 343- | 1 | | | |
| 25 | V211-360-801-60 | BOLT,SP/M8X16 | * | | 5 | | | | |

# FIG. 54 COVER(SIDE)SYSTEM(237F EXCEPT B)

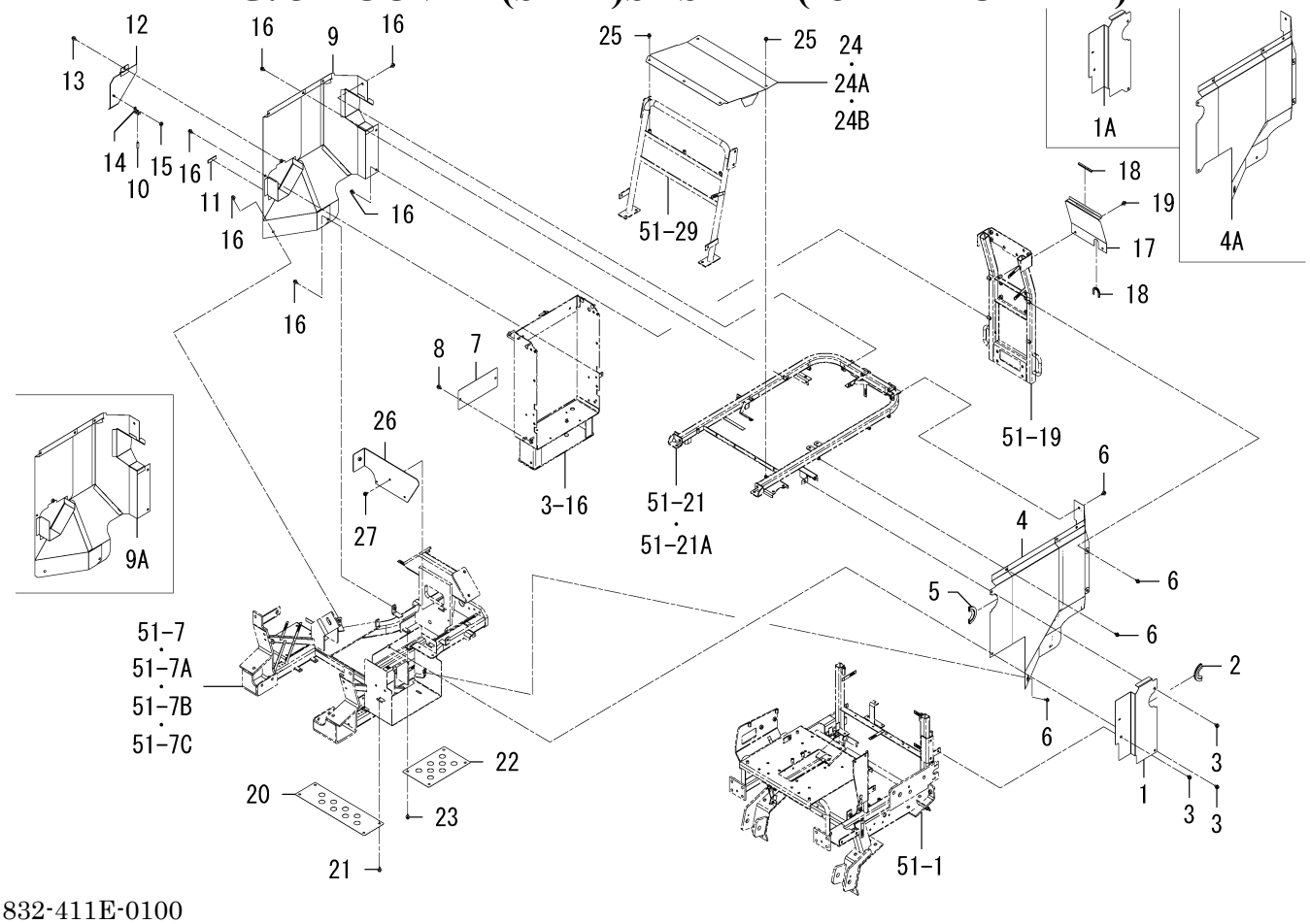


1832-411E-0100

| KEY | PART CODE | DESCRIPTION | SPC | TYPE OF MODEL | | ITC | COL | GRP | REMARKS |
|---|---|---|---|---|---|---|---|---|---|
| | | | | SF225F | SF237F | | | | |
| 26 | 1832-411-660-00 | COVER/FLYWHEEL COMP | * | | 1 | | | | |
| 27 | V211-360-801-60 | BOLT,SP/M8X16 | * | | 2 | | | | |

# FIG. 55 COVER(SIDE)SYSTEM(225F-B TYPE)

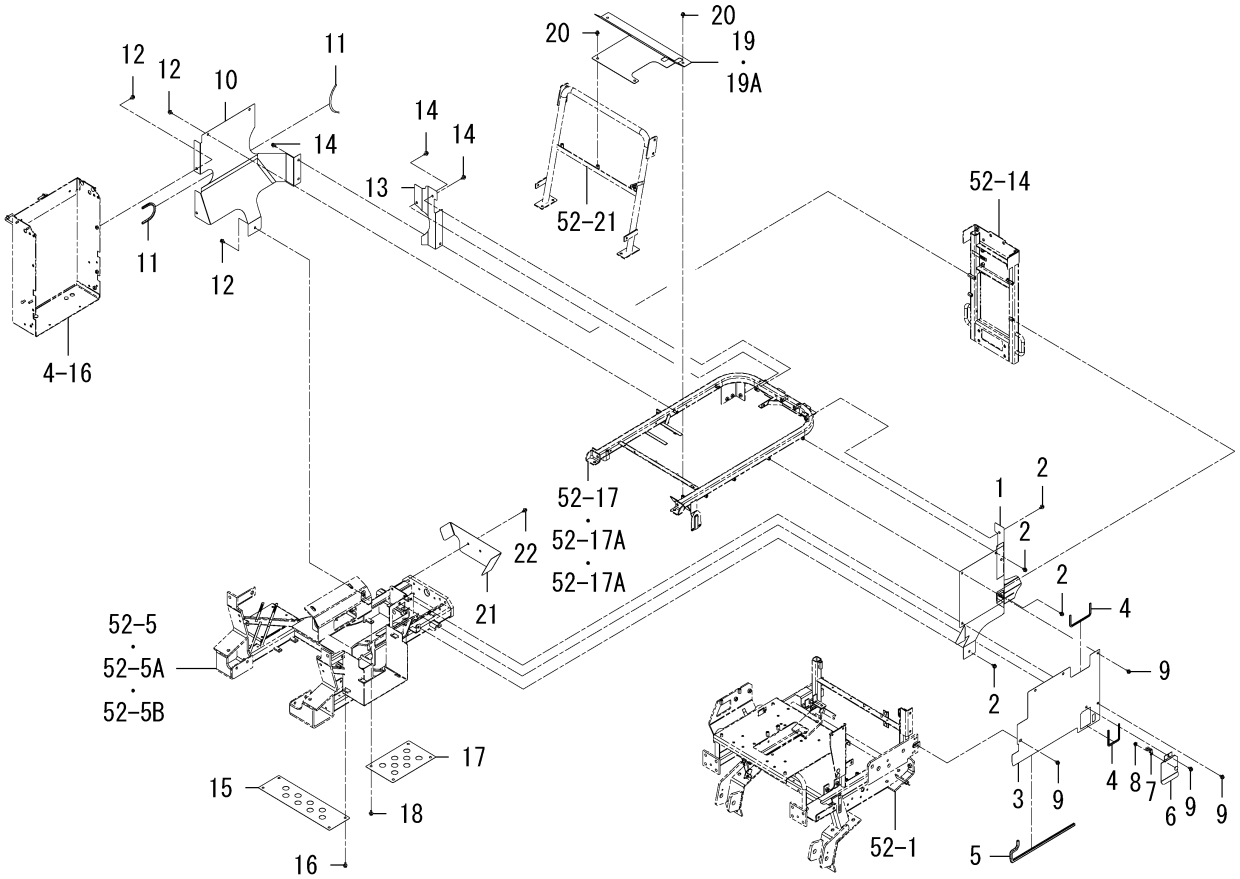


1832-411F-0100

| KEY | PART CODE | DESCRIPTION | SPC | TYPE OF MODEL | | ITC | COL | GRP | REMARKS |
|---|---|---|---|---|---|---|---|---|---|
| | | | | SF225F | SF237F | | | | |
| 1 | 1832-411-710-10 | COVER/REAR/LH COMP | * | 1 | | 1 | | | |
| 2 | V211-360-801-60 | BOLT,SP/M8X16 | * | 5 | | | | | |
| 3 | 1832-411-074-10 | PLATE/SIDE/LH/F | * | 1 | | 1 | | | |
| 4 | 1763-601-003-00 | TRIM/230 | * | 2 | | | | | |
| 5 | 2521-730-025-00 | INSULATOR/550 | * | 1 | | | | | |
| 6 | 1832-411-740-00 | COVER/OILGAUGE COMP | * | 1 | | | | | |
| 7 | 3610-631-002-00 | HANGER,SUPPORT | * | 1 | | | | | |
| 8 | V362-260-008-00 | NUT/WASHER/M8 | * | 1 | | | | | |
| 9 | V211-360-801-60 | BOLT,SP/M8X16 | * | 6 | | | | | |
| 10 | 1832-411-720-00 | COVER/REAR/RH COMP | * | 1 | | | | | |
| 11 | 2514-102-008-00 | TRIM/198 | * | 2 | | | | | |
| 12 | V211-360-801-60 | BOLT,SP/M8X16 | * | 6 | | | | | |
| 13 | 1832-411-073-00 | PLATE/REAR/RH/UPPER | * | 1 | | | | | |
| 14 | V211-360-801-60 | BOLT,SP/M8X16 | * | 3 | | | | | |
| 15 | 1832-411-003-00 | GUARD/UNDER/FRONT | * | 1 | | | | | |
| 16 | V211-360-801-60 | BOLT,SP/M8X16 | * | 4 | | | | | |
| 17 | 1832-411-004-00 | GUARD/UNDER/REAR | * | 1 | | | | | |
| 18 | V211-360-801-60 | BOLT,SP/M8X16 | * | 4 | | | | | |
| 19 | 1832-411-005-00 | COVER/CHUTE/SIDE | * | 1-21 | | | 7F | | |
| 19A | 1832-411-005-10 | COVER/CHUTE/SIDE | * | 1 22- | | 1 | 7F | | |
| 20 | V211-360-801-60 | BOLT,SP/M8X16 | * | 4 | | | | | |
| 21 | 1832-411-076-00 | COVER/FLYWHEEL/225 | * | 1 | | | | | |
| 22 | V211-360-801-60 | BOLT,SP/M8X16 | * | 2 | | | | | |
| | | | | | | | | | |
| | | | | | | | | | |
| | | | | | | | | | |
| | | | | | | | | | |
| | | | | | | | | | |
| | | | | | | | | | |
| | | | | | | | | | |

# FIG. 56 COVER(SIDE)SYSTEM(225F EXCEPT B)

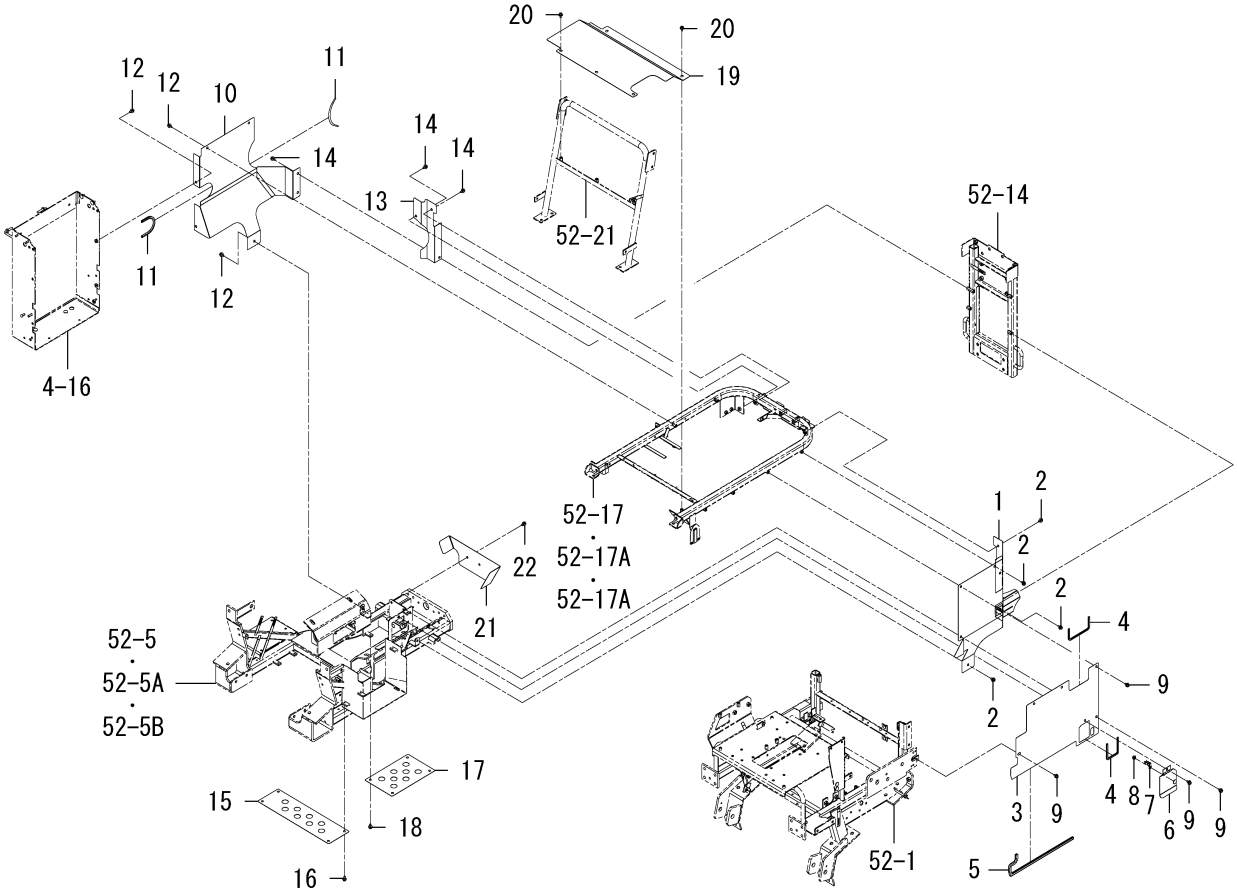


1832-411G-0100

| KEY | PART CODE | DESCRIPTION | SPC | TYPE OF MODEL | | ITC | COL | GRP | REMARKS |
|---|---|---|---|---|---|---|---|---|---|
| | | | | SF225F | SF237F | | | | |
| 1 | 1832-411-710-10 | COVER/REAR/LH COMP | * | 1 | | 1 | | | |
| 2 | V211-360-801-60 | BOLT,SP/M8X16 | * | 5 | | | | | |
| 3 | 1832-411-074-10 | PLATE/SIDE/LH/F | * | 1 | | 1 | | | |
| 4 | 1763-601-003-00 | TRIM/230 | * | 2 | | | | | |
| 5 | 2521-730-025-00 | INSULATOR/550 | * | 1 | | | | | |
| 6 | 1832-411-740-00 | COVER/OILGAUGE COMP | * | 1 | | | | | |
| 7 | 3610-631-002-00 | HANGER,SUPPORT | * | 1 | | | | | |
| 8 | V362-260-008-00 | NUT/WASHER/M8 | * | 1 | | | | | |
| 9 | V211-360-801-60 | BOLT,SP/M8X16 | * | 6 | | | | | |
| 10 | 1832-411-720-00 | COVER/REAR/RH COMP | * | 1 | | | | | |
| 11 | 2514-102-008-00 | TRIM/198 | * | 2 | | | | | |
| 12 | V211-360-801-60 | BOLT,SP/M8X16 | * | 6 | | | | | |
| 13 | 1832-411-073-00 | PLATE/REAR/RH/UPPER | * | 1 | | | | | |
| 14 | V211-360-801-60 | BOLT,SP/M8X16 | * | 3 | | | | | |
| 15 | 1832-411-003-00 | GUARD/UNDER/FRONT | * | 1 | | | | | |
| 16 | V211-360-801-60 | BOLT,SP/M8X16 | * | 4 | | | | | |
| 17 | 1832-411-004-00 | GUARD/UNDER/REAR | * | 1 | | | | | |
| 18 | V211-360-801-60 | BOLT,SP/M8X16 | * | 4 | | | | | |
| 19 | 1832-411-006-10 | COVER/CHUTE/SIDE/W | * | 1 | | 1 | 7F | | |
| 20 | V211-360-801-60 | BOLT,SP/M8X16 | * | 5 | | | | | |
| 21 | 1832-411-076-00 | COVER/FLYWHEEL/225 | * | 1 | | | | | |
| 22 | V211-360-801-60 | BOLT,SP/M8X16 | * | 2 | | | | | |

# FIG. 57 MUD GUARD SYSTEM

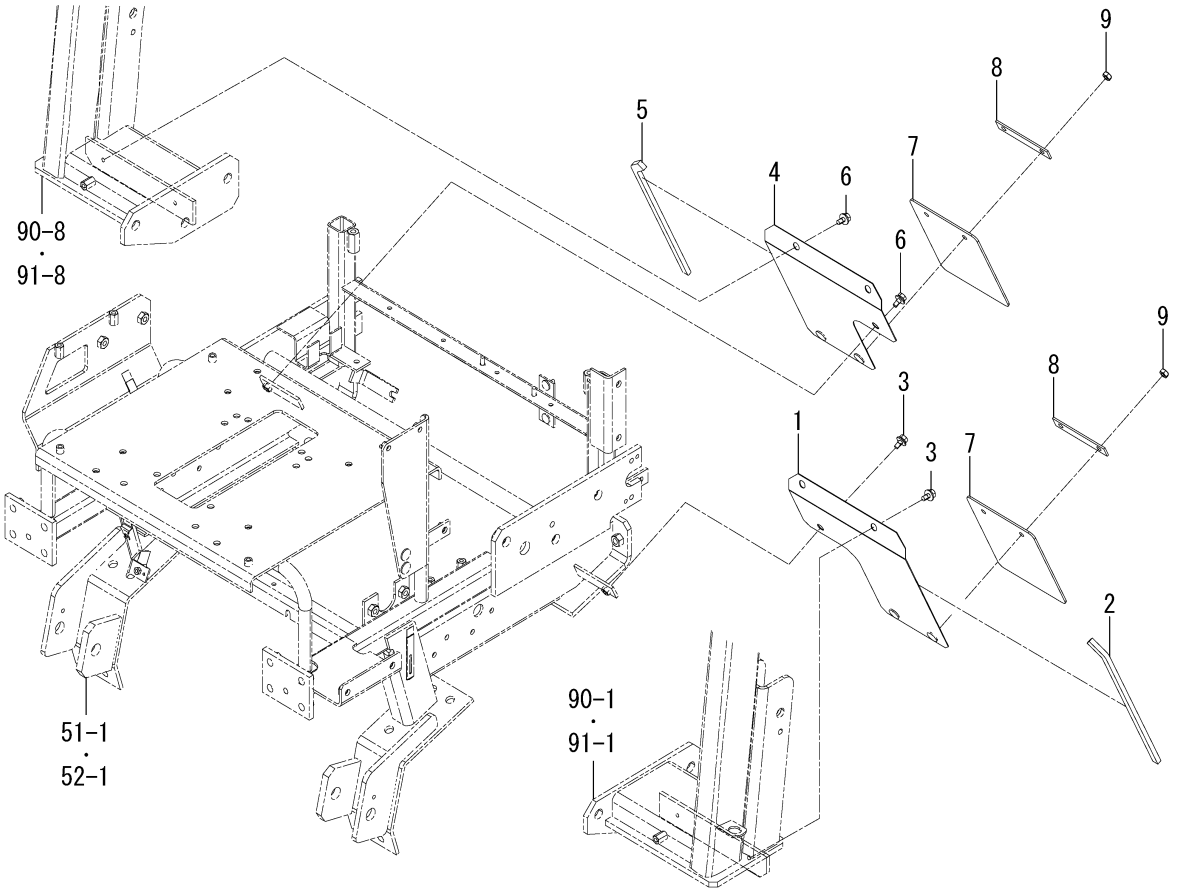


1832-412 -0100

| KEY | PART CODE | DESCRIPTION | SPC | TYPE OF MODEL | | ITC | COL | GRP | REMARKS |
|---|---|---|---|---|---|---|---|---|---|
| | | | | SF225F | SF237F | | | | |
| 1 | 1832-412-210-20 | MUDGUARD/LH COMP | * | 1 | 1 | | | | |
| 2 | 1764-603-002-00 | INSULATOR/240 | * | 1 | 1 | | | | |
| 3 | V211-360-801-60 | BOLT,SP/M8X16 | * | 3 | 3 | | | | |
| 4 | 1832-412-230-20 | MUDGUARD/RH COMP | * | 1 | 1 | | | | |
| 5 | 1764-603-002-00 | INSULATOR/240 | * | 1 | 1 | | | | |
| 6 | V211-360-801-60 | BOLT,SP/M8X16 | * | 3 | 3 | | | | |
| 7 | 1832-412-001-10 | GUARD/RUBBER | * | 2 | 2 | | | | |
| 8 | 1832-412-002-00 | PLATE/I/19X115 | * | 2 | 2 | | | | |
| 9 | 1719-312-001-00 | U-NUT | * | 4 | 4 | | | | |

# FIG. 58 LEVER(4WD)SYSTEM

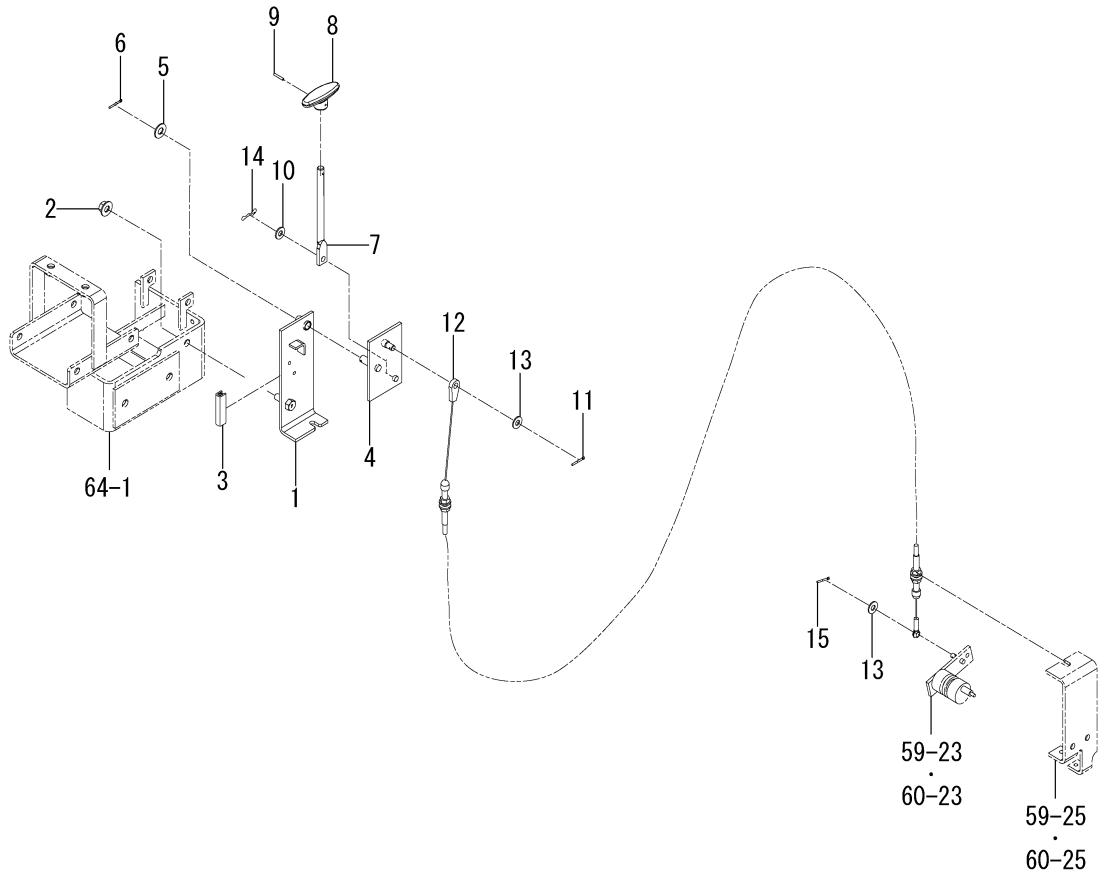


1832-430 -0100

| KEY | PART CODE | DESCRIPTION | SPC | TYPE OF MODEL | | ITC | COL | GRP | REMARKS |
|---|---|---|---|---|---|---|---|---|---|
| | | | | SF225F | SF237F | | | | |
| 1 | 1832-430-210-00 | BRACKET/LEVER/4WD | * | 1 | 1 | | | | |
| 2 | V362-260-010-00 | NUT/WASHER/M10 | * | 1 | 1 | | | | |
| 3 | 3666-202-005-10 | PAD/50 | * | 1 | 1 | | | | |
| 4 | 1832-430-220-00 | ARM/4WD COMP | * | 1 | 1 | | | | |
| 5 | V411-260-010-00 | WASHER,PL/M10 | * | 1 | 1 | | | | |
| 6 | V500-162-502-00 | PIN,SPLIT/2.5X20 | * | 1 | 1 | | | | |
| 7 | 1832-430-001-00 | ROD/4WD | * | 1 | 1 | | | | |
| 8 | 1773-267-002-00 | GRIP/4WD | * | 1 | 1 | | | | |
| 9 | V580-140-301-80 | PIN,SPRING/3X18 W | * | 1 | 1 | | | | |
| 10 | V411-260-008-00 | WASHER,PL/M8 | * | 1 | 1 | | | | |
| 11 | V500-162-502-00 | PIN,SPLIT/2.5X20 | * | 1 | 1 | | | | |
| 12 | 1832-430-230-00 | CABLE/4WD/LOCK ASSY | * | 1 | 1 | | | | |
| 13 | V411-260-008-00 | WASHER,PL/M8 | * | 2 | 2 | | | | |
| 14 | 1725-271-003-00 | PIN/SNAP/B | * | 1 | 1 | | | | |
| 15 | V500-162-502-00 | PIN,SPLIT/2.5X20 | * | 1 | 1 | | | | |

# FIG. 59 AUTO(4WD)SYSTEM(225F)

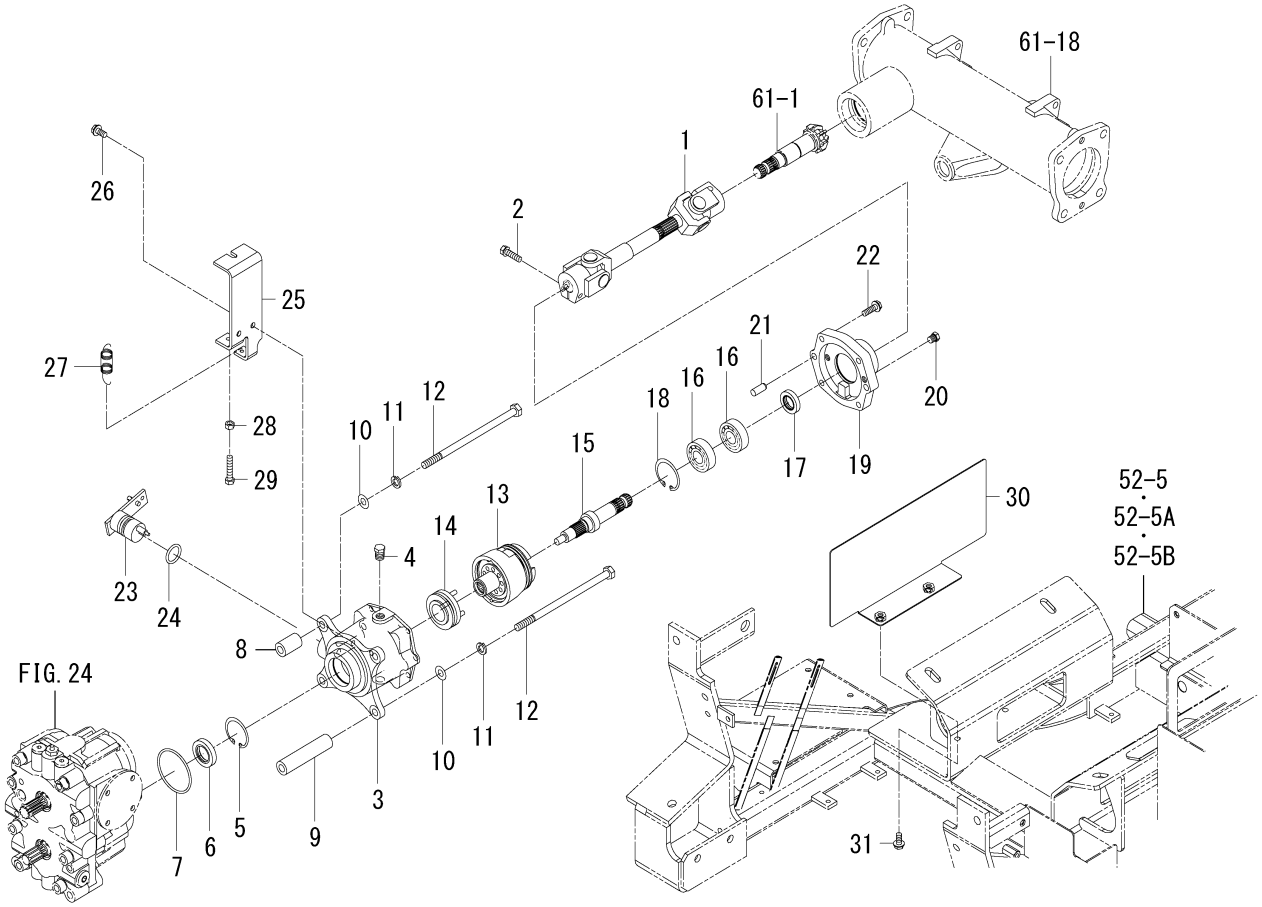


1832-431 -0100

| KEY | PART CODE | DESCRIPTION | SPC | TYPE OF MODEL | | ITC | COL | GRP | REMARKS |
|---|---|---|---|---|---|---|---|---|---|
| | | | | SF225F | SF237F | | | | |
| 1 | 1832-431-210-00 | SHAFT/4WD ASSY | * | 1 | | | | | |
| 2 | 2213-312-013-00 | BOLT/SEAL/M8X30X9T | * | 2 | | | | | |
| 3 | 1832-431-003-00 | CASE/4WD | * | 1 | | | | | |
| 4 | V782-160-000-4B | PLUG/SCREW/SEAL | * | 2 | | | | | |
| 5 | V705-140-045-00 | RING,SNAP/45 C | * | 1 | | | | | |
| 6 | V744-125-450-80 | SEAL,OIL/TC25458 | * | 1 | | | | | |
| 7 | V721-103-106-50 | O-RING/1A,G65 | * | 1 | | | | | |
| 8 | 1832-431-004-00 | HUB/12X22X30 | * | 2 | | | | | |
| 9 | 1832-431-005-00 | HUB/12X22X97 | * | 2 | | | | | |
| 10 | V411-260-010-00 | WASHER,PL/M10 | * | 4 | | | | | |
| 11 | V401-160-010-00 | WASHER,SP/M10 | * | 4 | | | | | |
| 12 | 1832-431-006-00 | BOLT/M10X190 | * | 4 | | | | | |
| 13 | 1720-221-210-00 | CLUTCH ASSY | * | 1 | | | | | FIG 108 |
| 14 | 1720-221-230-00 | SLEEVE ASSY | * | 1 | | | | | |
| 15 | 1832-431-001-00 | SHAFT/OUTPUT | * | 1 | | | | | |
| 16 | V600-110-620-40 | BEARING,RB/6204 | * | 2 | | | | | |
| 17 | V744-120-350-70 | SEAL,OIL/TC20357 | * | 1 | | | | | |
| 18 | V705-140-047-00 | RING,SNAP/47 C | * | 1 | | | | | |
| 19 | 1832-431-002-00 | METAL/4WD | * | 1 | | | | | |
| 20 | V782-160-000-2T | PLUG/SCREW/SEAL | * | 2 | | | | | |
| 21 | V523-101-002-20 | PIN,ST,B/10X22 | * | 2 | | | | | |
| 22 | V211-660-803-50 | BOLT,SP/M8X35/7T | * | 4 | | | | | |
| 23 | 1832-431-220-00 | ARM/4WD COMP | * | 1 | | | | | |
| 24 | V720-103-502-40 | O-RING/1A,P24 | * | 1 | | | | | |
| 25 | 1832-431-007-10 | PLATE | * | 1 | | | | | |
| 26 | V231-360-801-60 | FLANGEBOLT/M8X16 | * | 2 | | | | | |
| 27 | 3600-211-002-00 | SPRING,TENSION | * | 1 | | | | | |
| 28 | V304-260-008-00 | NUT/M8 | * | 1 | | | | | |
| 29 | V201-360-804-00 | BOLT/M8X40/7T | * | 1 | | | | | |
| 30 | 1832-431-230-10 | COVER/4WD COMP | * | 1 | | | 7F | | |

# FIG. 59 AUTO(4WD)SYSTEM(225F)

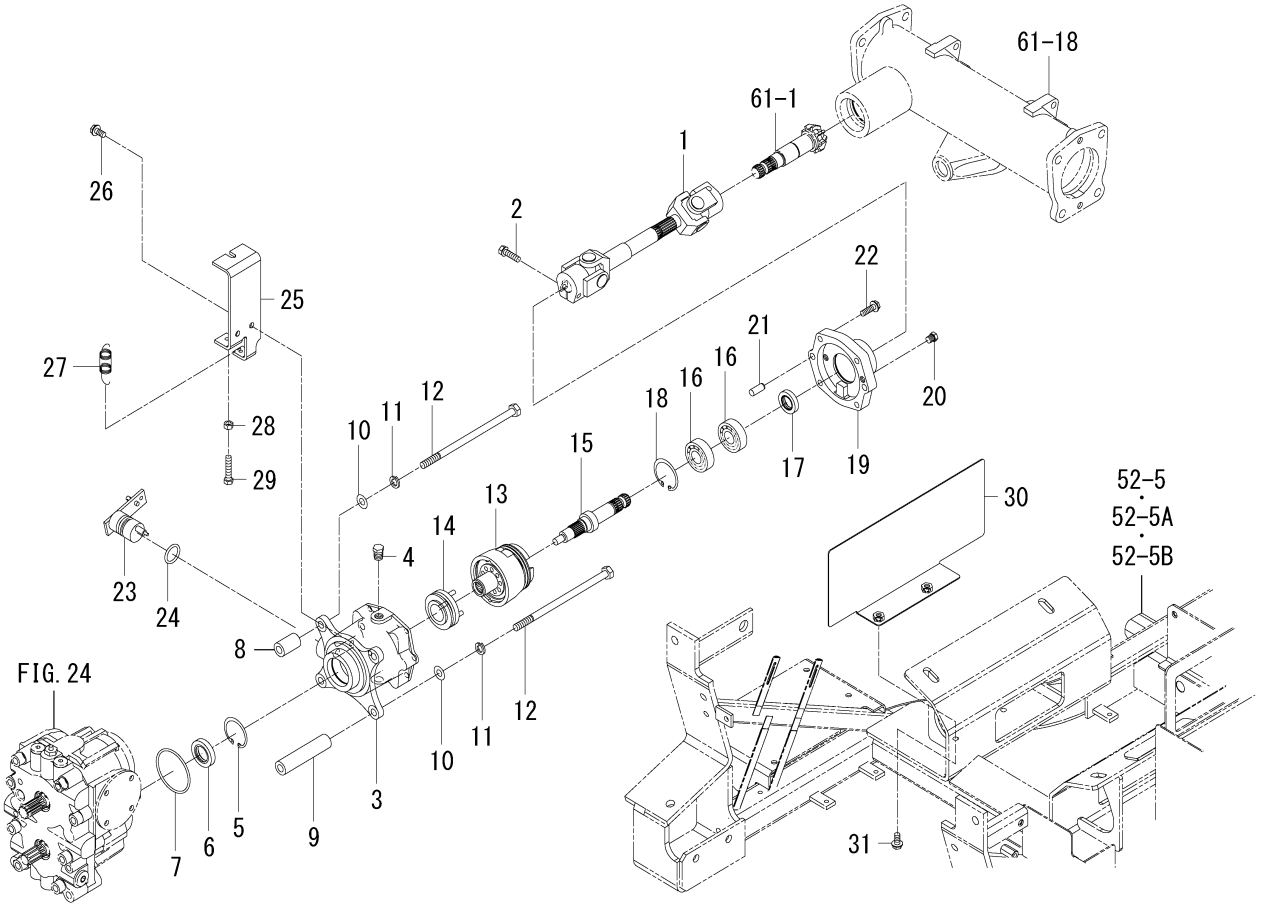


1832-431 -0100

| KEY | PART CODE | DESCRIPTION | SPC | TYPE OF MODEL | | ITC | COL | GRP | REMARKS |
|---|---|---|---|---|---|---|---|---|---|
| | | | | SF225F | SF237F | | | | |
| 31 | V231-360-801-60 | FLANGEBOLT/M8X16 | * | 2 | | | | | |

# FIG. 60 AUTO(4WD)SYSTEM(237F)

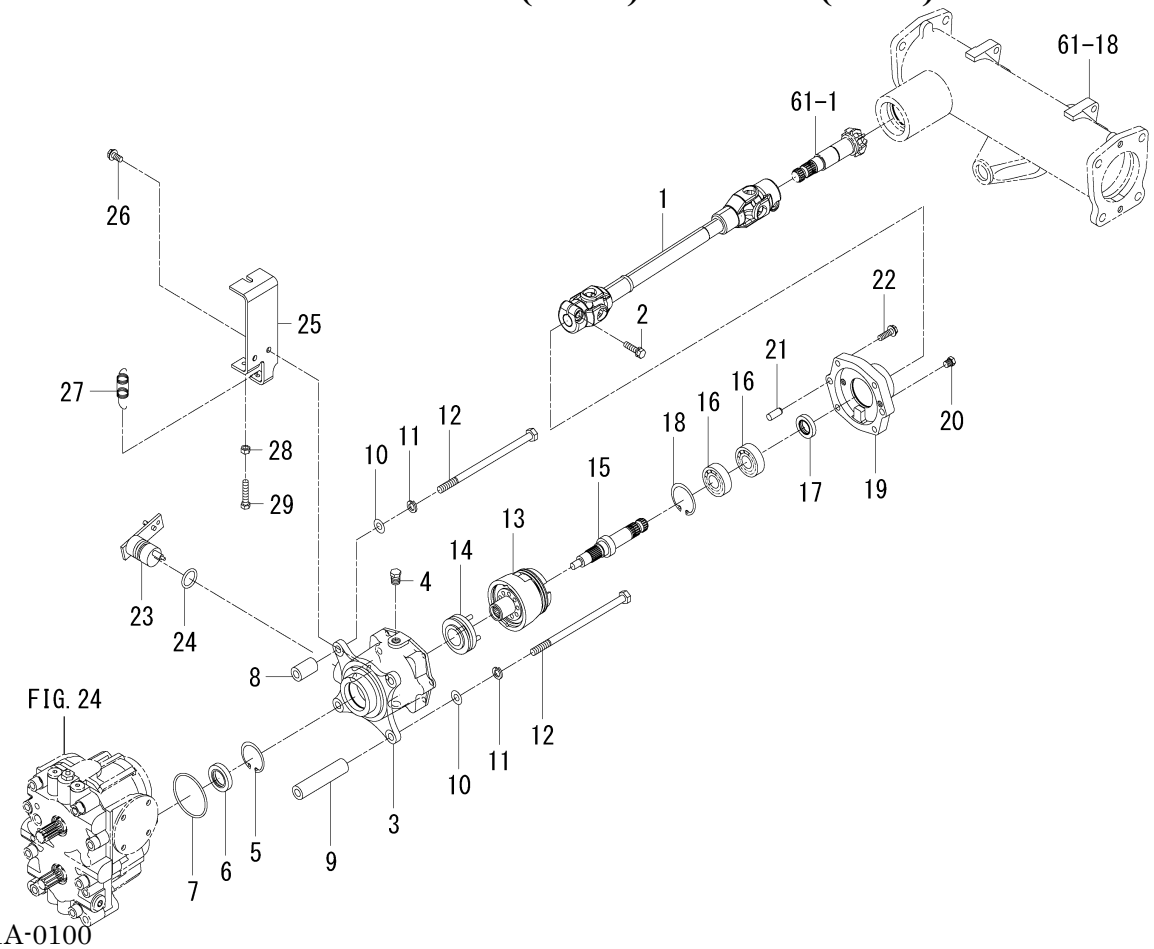


1832-431A-0100

| KEY | PART CODE | DESCRIPTION | SPC | TYPE OF MODEL | | ITC | COL | GRP | REMARKS |
|---|---|---|---|---|---|---|---|---|---|
| | | | | SF225F | SF237F | | | | |
| 1 | 1832-431-610-00 | SHAFT/4WD ASSY | * | | 1 | | | | |
| 2 | 2213-312-013-00 | BOLT/SEAL/M8X30X9T | * | | 2 | | | | |
| 3 | 1832-431-003-00 | CASE/4WD | * | | 1 | | | | |
| 4 | V782-160-000-4B | PLUG/SCREW/SEAL | * | | 2 | | | | |
| 5 | V705-140-045-00 | RING,SNAP/45 C | * | | 1 | | | | |
| 6 | V744-125-450-80 | SEAL,OIL/TC25458 | * | | 1 | | | | |
| 7 | V721-103-106-50 | O-RING/1A,G65 | * | | 1 | | | | |
| 8 | 1832-431-004-00 | HUB/12X22X30 | * | | 2 | | | | |
| 9 | 1832-431-005-00 | HUB/12X22X97 | * | | 2 | | | | |
| 10 | V411-260-010-00 | WASHER,PL/M10 | * | | 4 | | | | |
| 11 | V401-160-010-00 | WASHER,SP/M10 | * | | 4 | | | | |
| 12 | 1832-431-006-00 | BOLT/M10X190 | * | | 4 | | | | |
| 13 | 1720-221-210-00 | CLUTCH ASSY | * | | 1 | | | | FIG 108 |
| 14 | 1720-221-230-00 | SLEEVE ASSY | * | | 1 | | | | |
| 15 | 1832-431-001-00 | SHAFT/OUTPUT | * | | 1 | | | | |
| 16 | V600-110-620-40 | BEARING,RB/6204 | * | | 2 | | | | |
| 17 | V744-120-350-70 | SEAL,OIL/TC20357 | * | | 1 | | | | |
| 18 | V705-140-047-00 | RING,SNAP/47 C | * | | 1 | | | | |
| 19 | 1832-431-002-00 | METAL/4WD | * | | 1 | | | | |
| 20 | V782-160-000-2T | PLUG/SCREW/SEAL | * | | 2 | | | | |
| 21 | V523-101-002-20 | PIN,ST,B/10X22 | * | | 2 | | | | |
| 22 | V211-660-803-50 | BOLT,SP/M8X35/7T | * | | 4 | | | | |
| 23 | 1832-431-220-00 | ARM/4WD COMP | * | | 1 | | | | |
| 24 | V720-103-502-40 | O-RING/1A,P24 | * | | 1 | | | | |
| 25 | 1832-431-007-10 | PLATE | * | | 1 | | | | |
| 26 | V231-360-801-60 | FLANGEBOLT/M8X16 | * | | 2 | | | | |
| 27 | 3600-211-002-00 | SPRING,TENSION | * | | 1 | | | | |
| 28 | V304-260-008-00 | NUT/M8 | * | | 1 | | | | |
| 29 | V201-360-804-00 | BOLT/M8X40/7T | * | | 1 | | | | |
| | | | | | | | | | |

# FIG. 61 HOUSING(AXLE/REAR)SYSTEM(1/3)

20～30-PLEASE SEE 2/3 PAGE

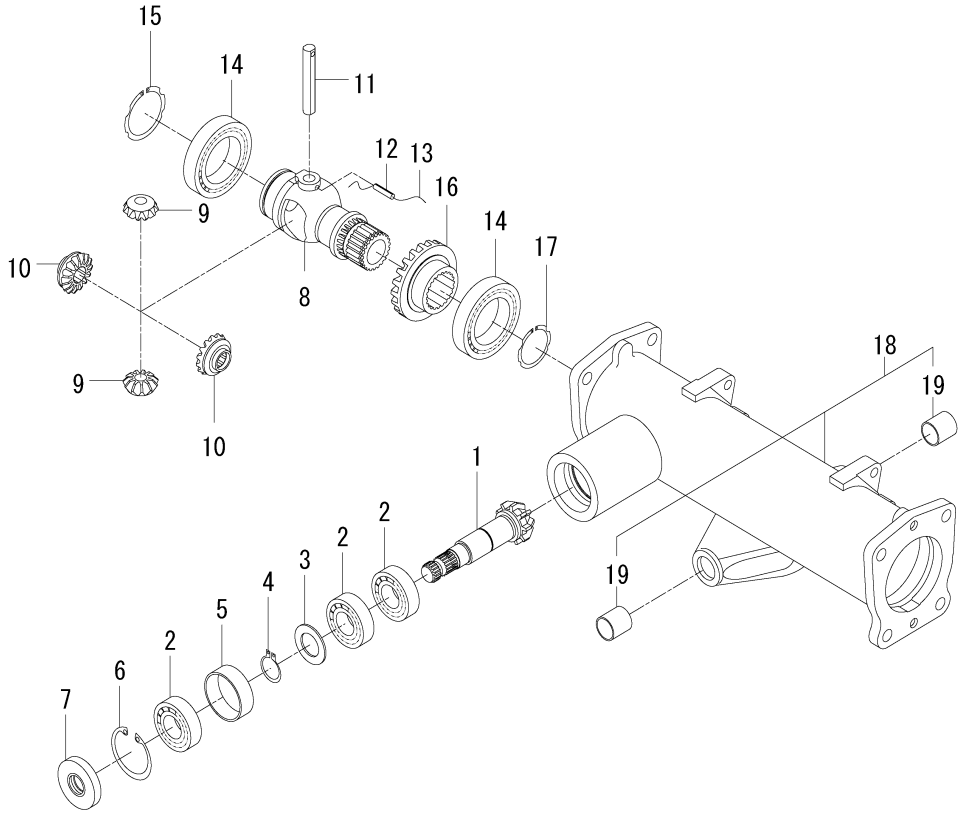


1832-433 -0100

| KEY | PART CODE | DESCRIPTION | SPC | TYPE OF MODEL | | ITC | COL | GRP | REMARKS |
|---|---|---|---|---|---|---|---|---|---|
| | | | | SF225F | SF237F | | | | |
| 1 | 1725-432-101-00 | PINION/BEVEL/09 | * | 1 | 1 | | | | |
| 2 | 1836-432-211-00 | BEARING/6205/C&U/C | * | 3 | 3 | | | | |
| 3 | 1725-432-110-00 | WASHER/25X42X02 | * | 1 | 1 | | | | |
| 4 | 1725-218-109-00 | RING/SNAP/CS25 | * | 1 | 1 | | | | |
| 5 | 1725-432-107-00 | COLLAR/48X52X17 | * | 1 | 1 | | | | |
| 6 | 1725-219-121-00 | RING/SNAP/CR52 | * | 1 | 1 | | | | |
| 7 | 1776-432-003-00 | SEAL/OIL | * | 1 | 1 | | | | |
| 8 | 1725-432-711-00 | CASE/DIFFERENTIAL/FR | * | 1 | 1 | | | | |
| 9 | 1725-432-712-10 | PINION/BEVEL/11 | * | 2 | 2 | | | | |
| 10 | 1725-432-713-00 | GEAR/BEVEL/15 | * | 2 | 2 | | | | |
| 11 | 1725-432-714-00 | PIN/12X75 | * | 1 | 1 | | | | |
| 12 | 1725-432-715-00 | PIN/SPRING | * | 1 | 1 | | | | |
| 13 | | WIRE | * | 1 | 1 | | | | |
| 14 | 1836-432-212-00 | BEARING/6010/HCH/C | * | 2 | 2 | | | | |
| 15 | 1725-432-113-00 | RING/SNAP/CS50 | * | 1 | 1 | | | | |
| 16 | 1725-432-108-00 | GEAR/BEVEL/21 | * | 1 | 1 | | | | |
| 17 | 1725-432-114-00 | RING/SNAP/CS40 | * | 1 | 1 | | | | |
| 18 | 1832-433-200-00 | HOUSING/AXLE ASSY | * | 1 | 1 | | | | |
| 19 | 1725-433-202-10 | BUSH/22X25X25 | * | 2 | 2 | | | | |
| 20 | 1725-434-101-00 | CASE/FINAL/UPPER/LH | * | 1 | 1 | | | | |
| 21 | 1725-434-114-00 | RING/O/1A/G90 | * | 1 | 1 | | | | |
| 22 | 1725-434-115-00 | BOLT/S/M12X30 | * | 4 | 4 | | | | |
| 23 | 1725-304-713-00 | PIN/B | * | 2 | 2 | | | | |
| 24 | 1725-434-111-00 | CASE/FINAL/UPPER/RH | * | 1 | 1 | | | | |
| 25 | 1725-434-114-00 | RING/O/1A/G90 | * | 1 | 1 | | | | |
| 26 | 1725-434-115-00 | BOLT/S/M12X30 | * | 4 | 4 | | | | |
| 27 | 1725-304-713-00 | PIN/B | * | 2 | 2 | | | | |
| 28 | 1832-434-001-10 | GEAR/BEVEL/11 | * | 2 | 2 | | | | |
| 29 | 1836-432-213-00 | BEARING/6206/HCH/C | * | 2 | 2 | | | | |
| 30 | 1725-308-103-00 | RING/SNAP/CR62 | * | 2 | 2 | | | | |

# FIG. 61 HOUSING(AXLE/REAR)SYSTEM(2/3)

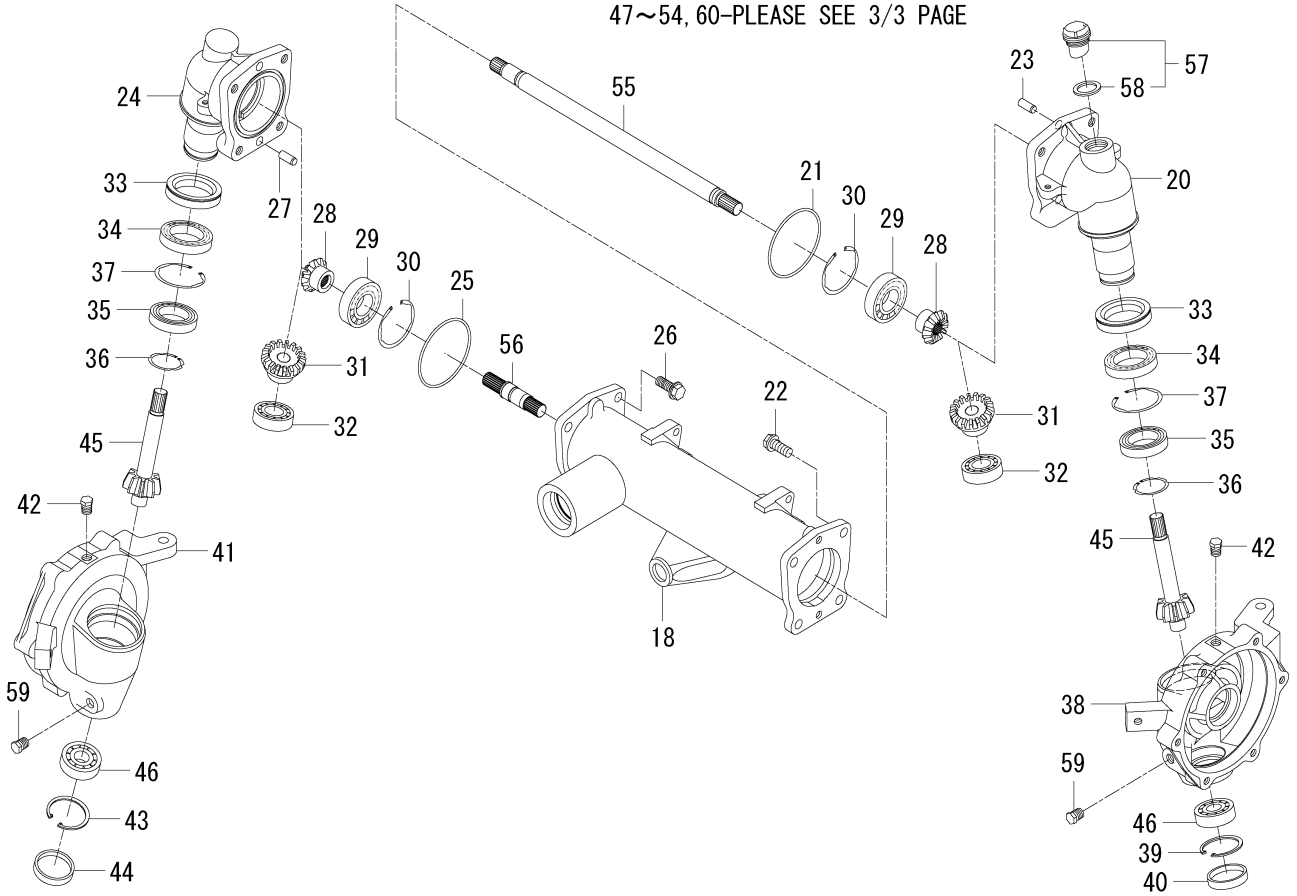


1832-433 -0100

| KEY | PART CODE | DESCRIPTION | SPC | TYPE OF MODEL | | ITC | COL | GRP | REMARKS |
|---|---|---|---|---|---|---|---|---|---|
| | | | | SF225F | SF237F | | | | |
| 31 | 1832-434-002-00 | GEAR/BEVEL/17 | * | 2 | 2 | | | | |
| 32 | 1836-432-214-00 | BEARING/6205/C&U/C) | * | 2 | 2 | | | | |
| 33 | 1725-434-005-00 | SEAL/OIL ASSY | * | 2 | 2 | | | | |
| 34 | 1836-432-215-00 | BEARING/6909/C&U/C) | * | 2 | 2 | | | | |
| 35 | 1836-432-216-00 | BEARING/6908/C&U/C) | * | 2 | 2 | | | | |
| 36 | 1725-432-114-00 | RING/SNAP/CS40 | * | 2 | 2 | | | | |
| 37 | 1725-308-103-00 | RING/SNAP/CR62 | * | 2 | 2 | | | | |
| 38 | 1832-434-102-00 | CASE/FINAL/LOWER/LH | * | 1 | 1 | | | | |
| 39 | 1725-219-121-00 | RING/SNAP/CR52 | * | 1 | 1 | | | | |
| 40 | 1725-434-122-00 | PLUG/52X10 | * | 1 | 1 | | | | |
| 41 | 1832-434-101-00 | CASE/FINAL/LOWER/RH | * | 1 | 1 | | | | |
| 42 | 1725-434-121-00 | PLUG/SCREW/R1/4 | * | 2 | 2 | | | | |
| 43 | 1725-219-121-00 | RING/SNAP/CR52 | * | 1 | 1 | | | | |
| 44 | 1725-434-122-00 | PLUG/52X10 | * | 1 | 1 | | | | |
| 45 | 1725-434-113-00 | GEAR/BEVEL/09 | * | 2 | 2 | | | | |
| 46 | 1836-432-217-00 | BEARING/6304/C&U/C | * | 2 | 2 | | | | |
| 47 | 1725-434-106-00 | SHAFT/WHEEL | * | 2 | 2 | | | | |
| 48 | 1725-434-107-00 | GEAR/BEVEL/35 | * | 2 | 2 | | | | |
| 49 | 1725-434-123-00 | WASHER/27X36X03 | * | 4 | 4 | | | | |
| 50 | 1725-434-013-00 | SEAL/OIL ASSY | * | 2 | 2 | | | | |
| 51 | 1836-432-214-00 | BEARING/6205/C&U/C) | * | 2 | 2 | | | | |
| 52 | 1836-432-213-00 | BEARING/6206/HCH/C | * | 2 | 2 | | | | |
| 53 | 1725-434-108-00 | COVER/WHEEL | * | 2 | 2 | | | | |
| 54 | 1725-434-124-00 | BOLT/SP/M10X30 | * | 12 | 12 | | | | |
| 55 | 1832-434-004-10 | SHAFT/450 | * | 1 | 1 | | | | |
| 56 | 1832-434-003-10 | SHAFT/100 | * | 1 | 1 | | | | |
| 57 | 1518-432-250-10 | CAP,OIL | * | 1 | 1 | | | | |
| 58 | 1518-306-203-10 | PACKING | * | 1 | 1 | | | | |
| 59 | V782-160-000-4B | PLUG/SCREW/SEAL | * | 2 | 2 | | | | |
| 60 | 1832-433-250-00 | PIN/PIVOT COMP | * | 1 | 1 | | | | |

# FIG. 61 HOUSING(AXLE/REAR)SYSTEM(3/3)

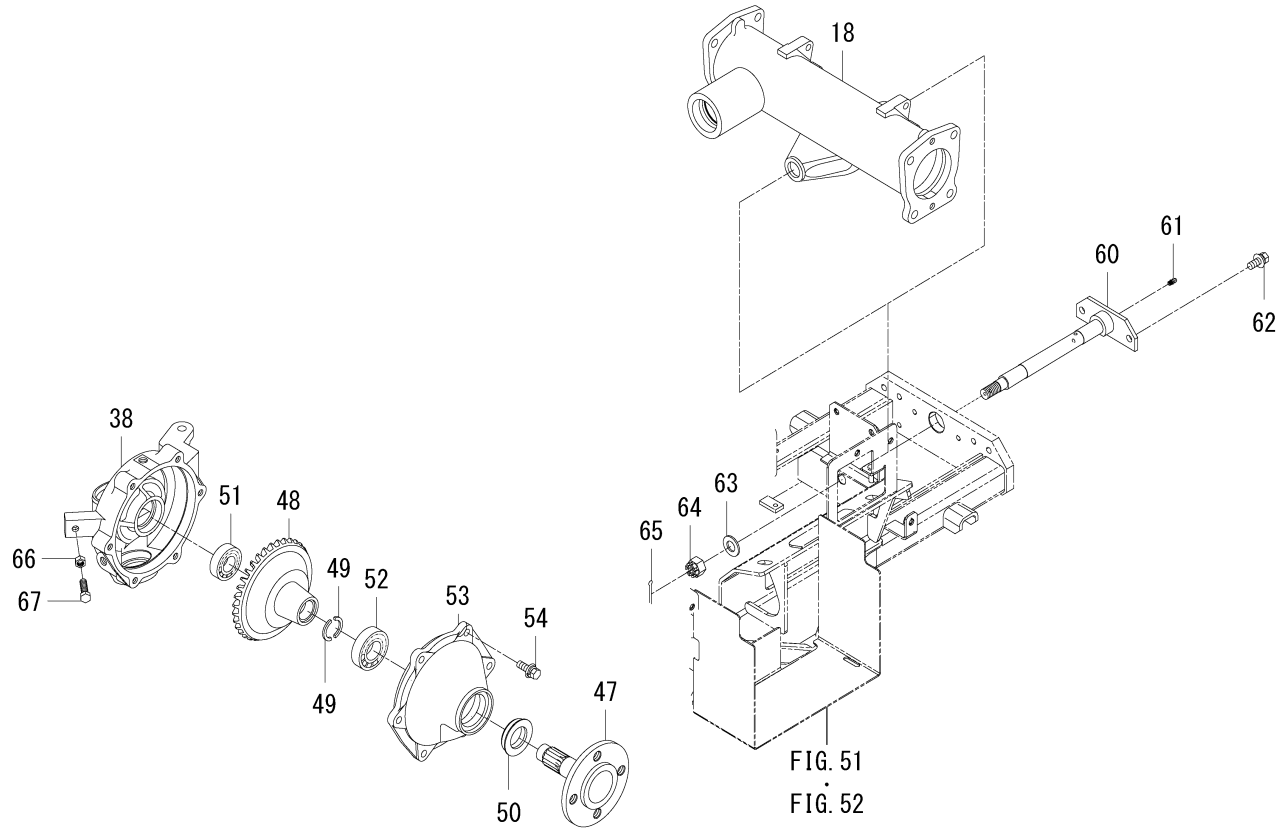


1832-433 -0100

| KEY | PART CODE | DESCRIPTION | SPC | TYPE OF MODEL | | ITC | COL | GRP | REMARKS |
|---|---|---|---|---|---|---|---|---|---|
| | | | | SF225F | SF237F | | | | |
| 61 | V760-150-000-00 | NIPPLE,GREASE | * | 1 | 1 | | | | |
| 62 | V211-661-002-50 | BOLT,SP/M10X25/7T | * | 2 | 2 | | | | |
| 63 | V411-260-016-00 | WASHER,PL/M16 | * | 1 | 1 | | | | |
| 64 | V327-261-216-00 | NUT,CASTLE/M16 P=1.5 | * | 1 | 1 | | | | |
| 65 | V500-164-003-00 | PIN,SPLIT/4X30 | * | 1 | 1 | | | | |
| 66 | V304-460-010-00 | NUT/M10/7T | * | 2 | 2 | | | | |
| 67 | V201-461-003-50 | BOLT/M10X35/9T | * | 2 | 2 | | | | |

# FIG. 62 ROD(TIE)SYSTEM

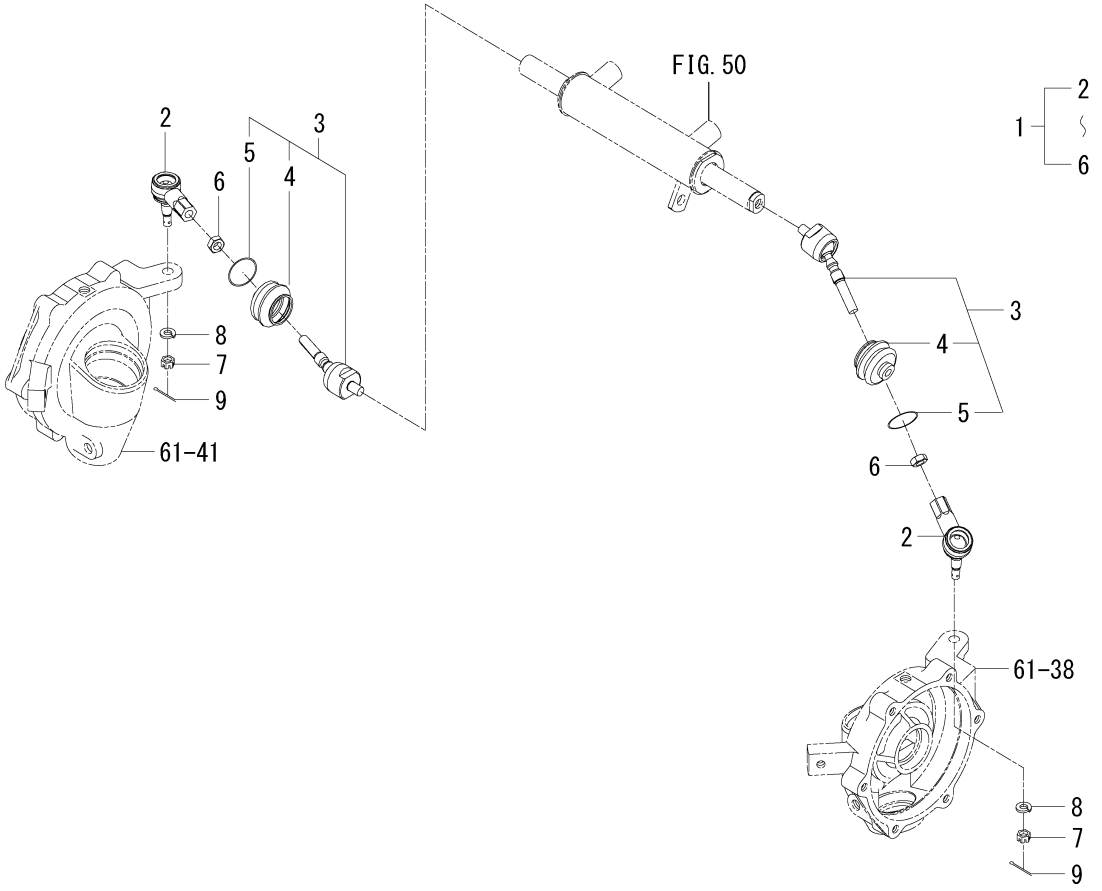


1725-436A-0100

| KEY | PART CODE | DESCRIPTION | SPC | TYPE OF MODEL | | ITC | COL | GRP | REMARKS |
|---|---|---|---|---|---|---|---|---|---|
| | | | | SF225F | SF237F | | | | |
| 1 | 1725-436-600-00 | RODEND/137 ASSY | * | 2 | 2 | | | | |
| 2 | 1725-436-320-00 | RODEND/B ASSY | * | 2 | 2 | | | | |
| 3 | 1725-436-610-00 | RACKEND ASSY | * | 2 | 2 | | | | |
| 4 | 1725-436-611-00 | COVER/DUST | * | 2 | 2 | | | | |
| 5 | 1725-436-612-00 | RING/36 | * | 2 | 2 | | | | |
| 6 | 1725-436-601-00 | NUT/M12X1.25 | * | 2 | 2 | | | | |
| 7 | V327-262-110-00 | NUT,CASTLE/M10 P1.25 | * | 2 | 2 | | | | |
| 8 | V401-160-010-00 | WASHER,SP/M10 | * | 2 | 2 | | | | |
| 9 | V500-162-502-00 | PIN,SPLIT/2.5X20 | * | 2 | 2 | | | | |

# FIG. 63 WHEEL(REAR)SYSTEM

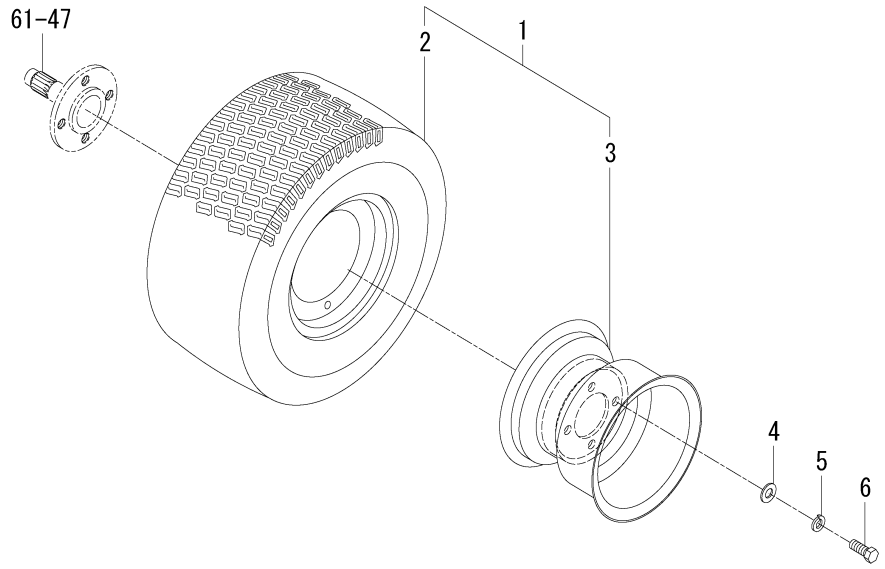


1832-441 -0100

| KEY | PART CODE | DESCRIPTION | SPC | TYPE OF MODEL | | ITC | COL | GRP | REMARKS |
|---|---|---|---|---|---|---|---|---|---|
| | | | | SF225F | SF237F | | | | |
| 1 | 1832-441-200-00 | TIRE/F/18X8.50- ASSY | * | 2 | 2 | | 6G | | |
| 2 | 1728-441-701-10 | TIRE/TURF/18X8.50-8 | * | 2 | 2 | | | | |
| 3 | 1832-441-230-00 | WHEEL/8X7 COMP | * | 2 | 2 | | 6G | | |
| 4 | V411-260-014-00 | WASHER,PL/M14 | * | 8 | 8 | | | | |
| 5 | V401-160-014-00 | WASHER,SP/M14 | * | 8 | 8 | | | | |
| 6 | 6209-000-055-00 | BOLT | * | 8 | 8 | | | | |

# FIG. 64 CONTROL SYSTEM

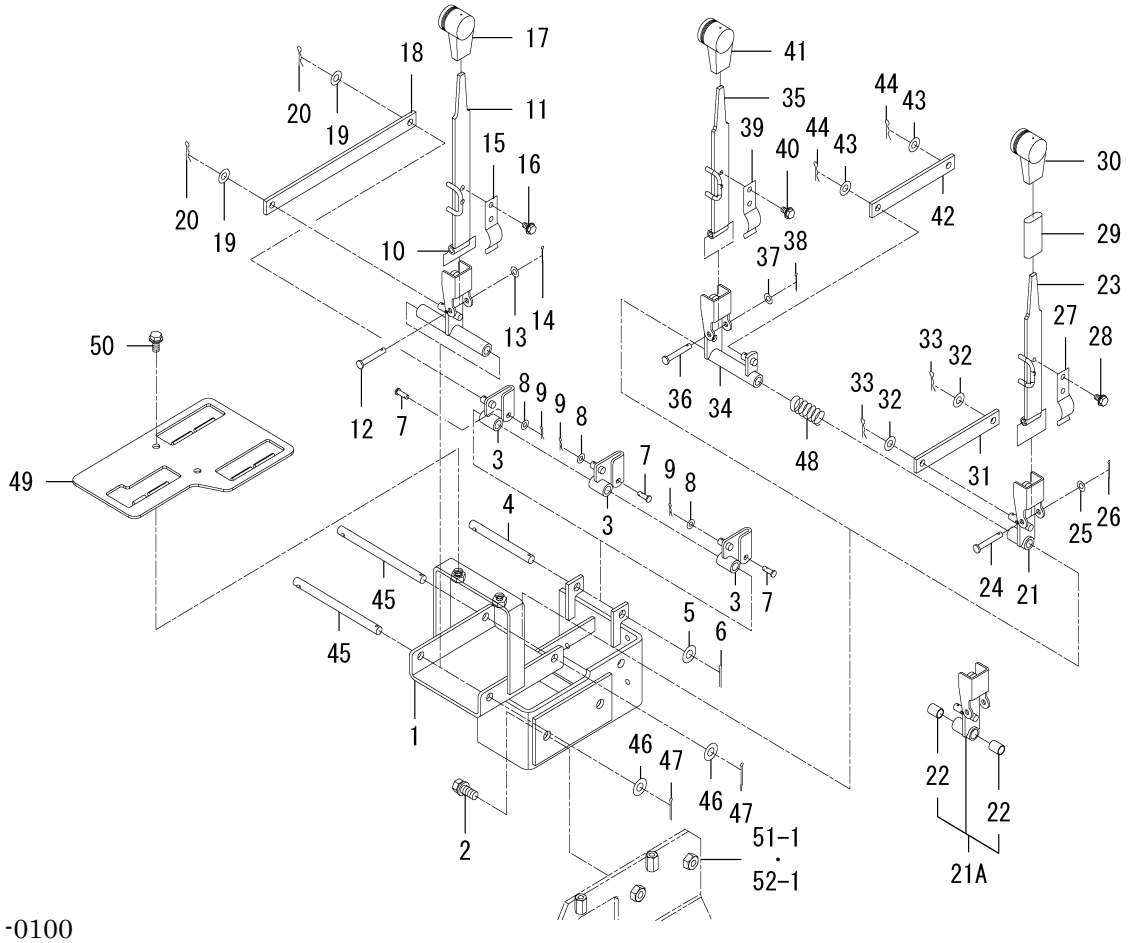


1832-503 -0100

| KEY | PART CODE | DESCRIPTION | SPC | TYPE OF MODEL | | ITC | COL | GRP | REMARKS |
|---|---|---|---|---|---|---|---|---|---|
| | | | | SF225F | SF237F | | | | |
| 1 | 1832-503-250-10 | BRACKET/VALVE COMP | * | 1 | 1 | | | | |
| 2 | V211-561-003-00 | BOLT,S/M10X30/7T | * | 2 | 2 | | | | |
| 3 | 1832-503-210-00 | ARM/SPOOL COMP | * | 3 | 3 | | | | |
| 4 | 1832-503-003-00 | PIN/10X101 | * | 1 | 1 | | | | |
| 5 | V411-260-010-00 | WASHER,PL/M10 | * | 1 | 1 | | | | |
| 6 | V500-162-502-50 | PIN,SPLIT/2.5X25 | * | 1 | 1 | | | | |
| 7 | 1771-503-003-00 | PIN/05X17 | * | 3 | 3 | | | | |
| 8 | V411-260-005-00 | WASHER,PL/M5 | * | 3 | 3 | | | | |
| 9 | V560-160-005-00 | PIN/SNAP | * | 3 | 3 | | | | |
| 10 | 1832-503-220-10 | ARM/LIFT/MOWER COMP | * | 1 | 1 | | | | |
| 11 | 1809-503-220-10 | LEVER/LIFT COMP | * | 1 | 1 | | | | |
| 12 | 2145-586-002-00 | PIN/6X42 | * | 1 | 1 | | | | |
| 13 | V411-260-006-00 | WASHER,PL/M6 | * | 1 | 1 | | | | |
| 14 | V500-162-002-00 | PIN,SPLIT/2X20 | * | 1 | 1 | | | | |
| 15 | 1809-503-003-00 | SPRING/PLATE | * | 1 | 1 | | | | |
| 16 | V230-360-601-00 | FLANGEBOLT/M6X10 | * | 2 | 2 | | | | |
| 17 | 1444-307-007-00 | GRIP | * | 1 | 1 | | | | |
| 18 | 1832-503-001-00 | PLATE/I/19X254 | * | 1 | 1 | | | | |
| 19 | V411-260-008-00 | WASHER,PL/M8 | * | 2 | 2 | | | | |
| 20 | V560-160-008-00 | PIN/SNAP | * | 2 | 2 | | | | |
| 21 | 1832-503-230-10 | ARM/LIFT/COLLECTOR | * | 1 -60 | 1 -358 | | | | |
| 21A | 1832-503-610-00 | ARM/LIFT/COLLECTOR | * | 1 61- | 1 359- | | | | |
| 22 | 1614-223-221-00 | BUSH/10X12X15 | * | 2 61- | 2 359- | | | | |
| 23 | 1832-503-270-10 | LEVER/COLLECTOR COMP | * | 1 | 1 | | | | |
| 24 | 2145-586-002-00 | PIN/6X42 | * | 1 | 1 | | | | |
| 25 | V411-260-006-00 | WASHER,PL/M6 | * | 1 | 1 | | | | |
| 26 | V500-162-002-00 | PIN,SPLIT/2X20 | * | 1 | 1 | | | | |
| 27 | 1809-503-003-00 | SPRING/PLATE | * | 1 | 1 | | | | |
| 28 | V230-360-601-00 | FLANGEBOLT/M6X10 | * | 2 | 2 | | | | |
| 29 | 1675-262-002-00 | INSULATOR/LEVER/SUB | * | 1 -60 | 1 -358 | | | | |

# FIG. 64 CONTROL SYSTEM

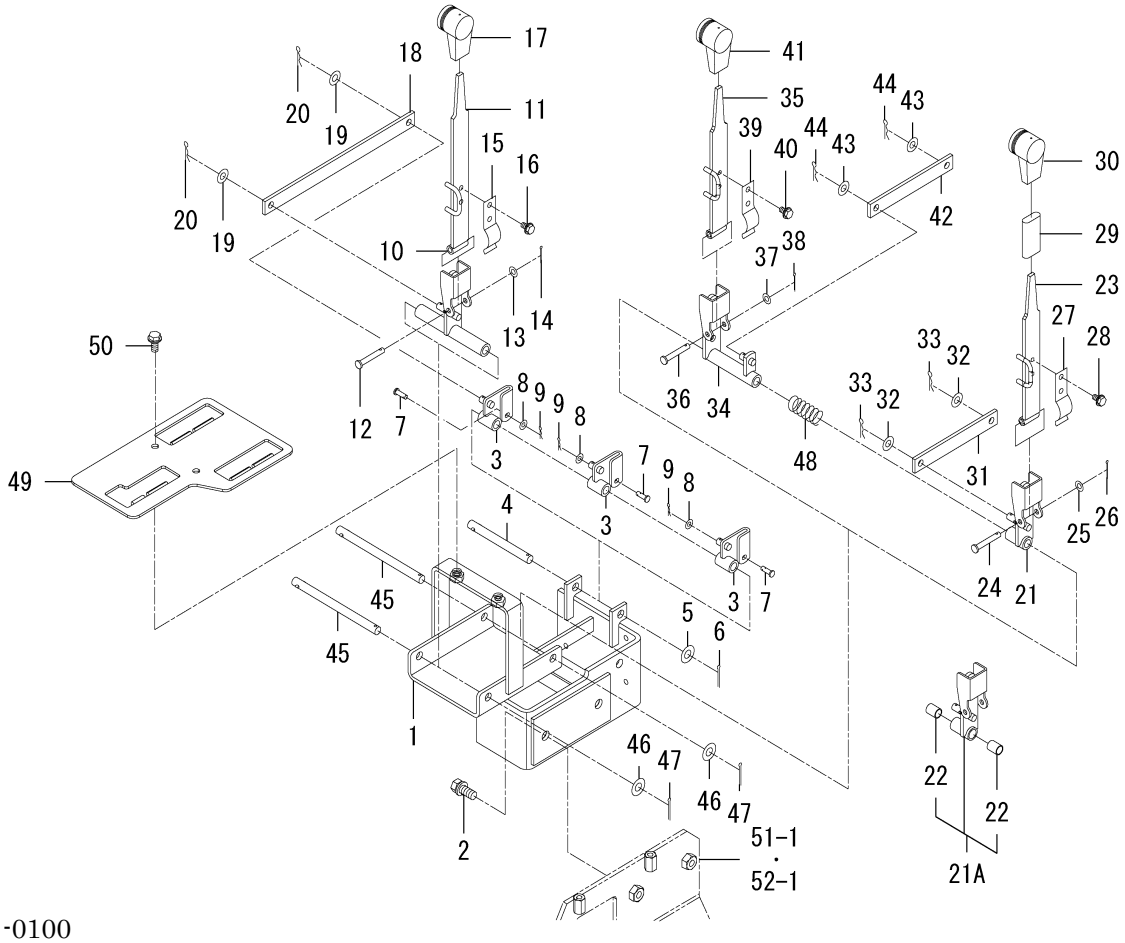


1832-503 -0100

| KEY | PART CODE | DESCRIPTION | SPC | TYPE OF MODEL | | ITC | COL | GRP | REMARKS |
|---|---|---|---|---|---|---|---|---|---|
| | | | | SF225F | SF237F | | | | |
| 30 | 1444-307-007-00 | GRIP | * | 1 | 1 | | | | |
| 31 | 1832-503-002-00 | PLATE/I/19X140 | * | 1 | 1 | | | | |
| 32 | V411-260-008-00 | WASHER,PL/M8 | * | 2 | 2 | | | | |
| 33 | V560-160-008-00 | PIN/SNAP | * | 2 | 2 | | | | |
| 34 | 1832-503-240-10 | ARM/DUMP/COLLECTOR | * | 1 | 1 | | | | |
| 35 | 1832-503-270-10 | LEVER/COLLECTOR COMP | * | 1 | 1 | | | | |
| 36 | 2145-586-002-00 | PIN/6X42 | * | 1 | 1 | | | | |
| 37 | V411-260-006-00 | WASHER,PL/M6 | * | 1 | 1 | | | | |
| 38 | V500-162-002-00 | PIN,SPLIT/2X20 | * | 1 | 1 | | | | |
| 39 | 1809-503-003-00 | SPRING/PLATE | * | 1 | 1 | | | | |
| 40 | V230-360-601-00 | FLANGEBOLT/M6X10 | * | 2 | 2 | | | | |
| 41 | 1444-307-007-00 | GRIP | * | 1 | 1 | | | | |
| 42 | 1832-503-002-00 | PLATE/I/19X140 | * | 1 | 1 | | | | |
| 43 | V411-260-008-00 | WASHER,PL/M8 | * | 2 | 2 | | | | |
| 44 | V560-160-008-00 | PIN/SNAP | * | 2 | 2 | | | | |
| 45 | 1832-503-004-00 | PIN/10X141 | * | 2 | 2 | | | | |
| 46 | V411-260-010-00 | WASHER,PL/M10 | * | 2 | 2 | | | | |
| 47 | V500-162-502-50 | PIN,SPLIT/2.5X25 | * | 2 | 2 | | | | |
| 48 | 3656-585-001-00 | SPRING/HC043 | * | 1 -60 | 1 -358 | | | | |
| 49 | 1832-503-280-10 | GUIDE/LEVER COMP | * | 1 | 1 | | | | |
| 50 | V211-660-802-00 | BOLT,SP/M8X20/7T | * | 2 | 2 | | | | |
| | | | | | | | | | |
| | | | | | | | | | |
| | | | | | | | | | |
| | | | | | | | | | |
| | | | | | | | | | |
| | | | | | | | | | |
| | | | | | | | | | |
| | | | | | | | | | |
| | | | | | | | | | |

# FIG. 65 CYLINDER(LIFT)SYSTEM

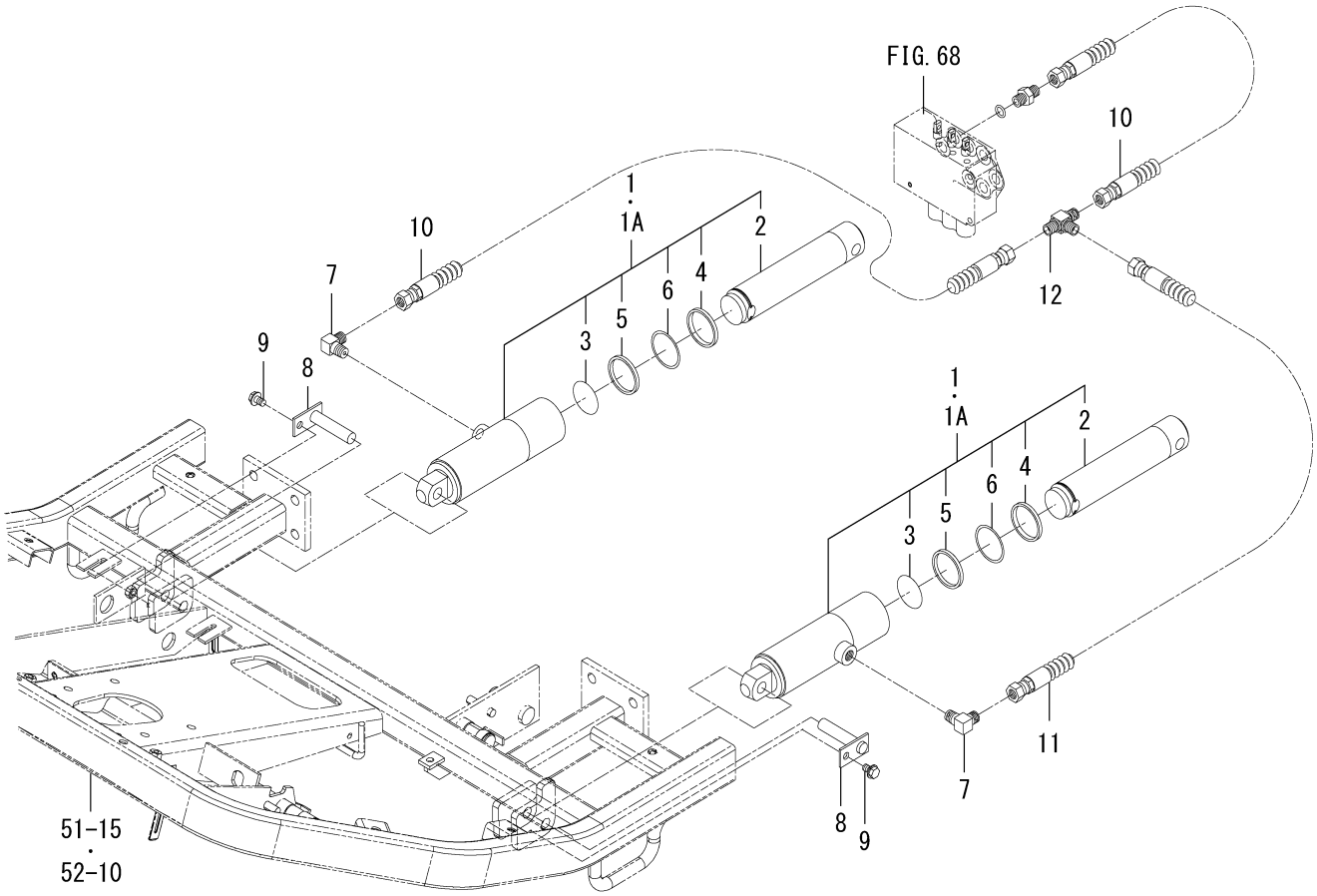


1832-504A-0100

| KEY | PART CODE | DESCRIPTION | SPC | TYPE OF MODEL | | ITC | COL | GRP | REMARKS |
|---|---|---|---|---|---|---|---|---|---|
| | | | | SF225F | SF237F | | | | |
| 1 | K182-013-000-30 | CYLINDER/013 ASSY | * | 2 -266 | 2 -545 | | | | |
| 1A | K182-013-000-40 | CYLINDER/013 ASSY | * | 2 267- | 2 546- | 1 | | | |
| 2 | K182-012-001-10 | PISTON/012 | * | 2 | 2 | | | | |
| 3 | K182-007-002-00 | PISTON STOPPER | * | 2 | 2 | | | | |
| 4 | V793-142-480-60 | DUST SEAL SER42 | * | 2 | 2 | | | | |
| 5 | V724-124-304-20 | PACKING PS-42 | * | 2 | 2 | | | | |
| 6 | V730-104-804-20 | RING/BACK UP | * | 2 | 2 | | | | |
| 7 | 3768-185-022-20 | ADAPTER/90DEG/PUMP | * | 2 | 2 | | | | |
| 8 | 1809-553-280-00 | PIN/14X63 COMP | * | 2 | 2 | | | | |
| 9 | V211-560-801-60 | BOLT,S/M8X16/7T | * | 2 | 2 | | | | |
| 10 | 1832-504-610-00 | HOSE/HYDRO/660 ASSY | * | 2 | 2 | | | | |
| 11 | 1832-508-610-00 | HOSE/HYDRO/1100 ASSY | * | 1 | 1 | | | | |
| 12 | 8664-555-003-00 | ADAPTER/T | * | 1 | 1 | | | | |

# FIG. 66 PIPING(PUMP)SYSTEM(237F)

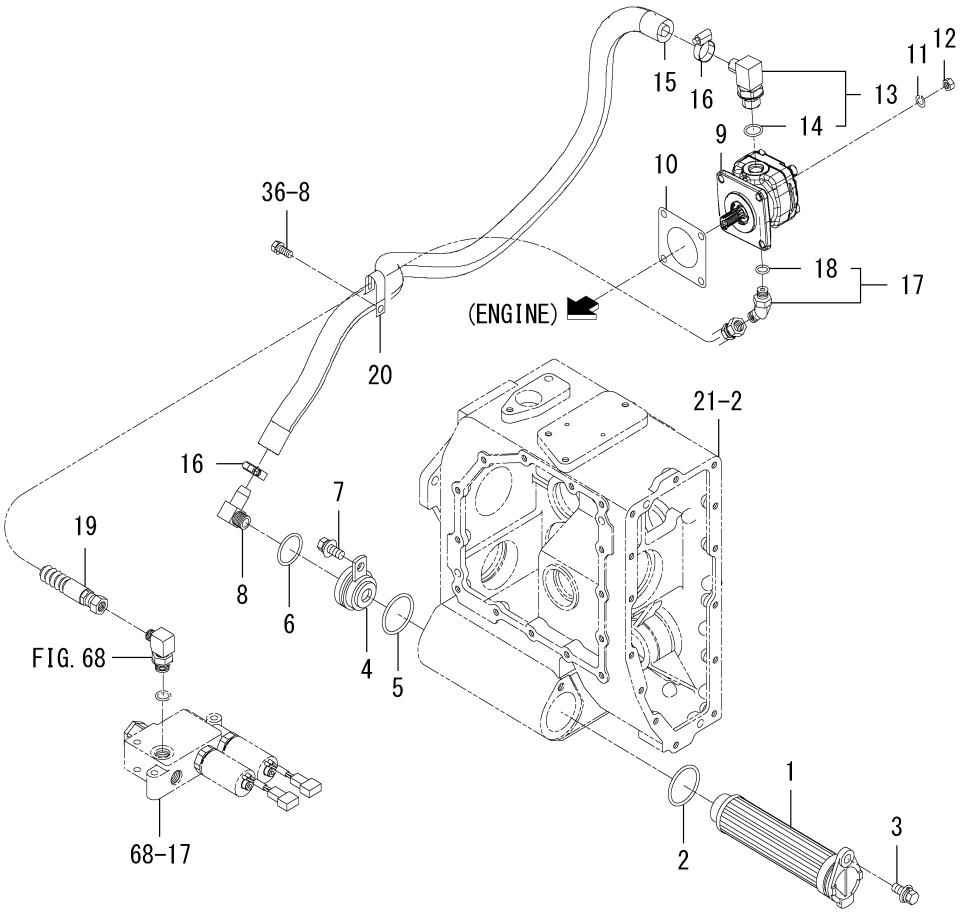


1832-508A-0100

| KEY | PART CODE | DESCRIPTION | SPC | TYPE OF MODEL | | ITC | COL | GRP | REMARKS |
|---|---|---|---|---|---|---|---|---|---|
| | | | | SF225F | SF237F | | | | |
| 1 | 1805-508-260-00 | FILTER/SUCTION/400 | * | | 1 | | | | |
| 2 | V721-103-104-50 | O-RING/1A,G45 | * | | 1 | | | | |
| 3 | V211-361-002-50 | BOLT,SP/M10X25 | * | | 1 | | | | |
| 4 | 1832-508-210-10 | CONNECTOR/SUCTION | * | | 1 | | | | |
| 5 | V721-103-104-50 | O-RING/1A,G45 | * | | 1 | | | | |
| 6 | V721-103-103-50 | O-RING/1A,G35 | * | | 1 | | | | |
| 7 | V211-361-002-50 | BOLT,SP/M10X25 | * | | 1 | | | | |
| 8 | 3626-370-005-00 | ADAPTER/90DEG/3/8 | * | | 1 | | | | |
| 9 | 1825-408-210-00 | PUMP/GEAR/R4 ASSY | * | | 1 | | | | |
| 10 | 1404-503-006-00 | PACKING,OIL PUMP | * | | 1 | | | | |
| 11 | V401-160-008-00 | WASHER,SP/M8 | * | | 4 | | | | |
| 12 | V304-260-008-00 | NUT/M8 | * | | 4 | | | | |
| 13 | P103-521-007-00 | ELBOW/SUCTION ASSY | * | | 1 | | | | |
| 14 | V720-112-401-80 | O-RING/1B,P18 | * | | 1 | | | | |
| 15 | 1752-508-005-00 | HOSE/DRAIN/MOTER | * | | 1 | | | | |
| 16 | J061-116-025-00 | CLAMP/WORM/16-25 | * | | 2 | | | | |
| 17 | P113-211-300-00 | ELBOW/45DEG ASSY | * | | 1 | | | | |
| 18 | V720-112-401-10 | O-RING/1B,P11 | * | | 1 | | | | |
| 19 | 1832-508-610-00 | HOSE/HYDRO/1100 ASSY | * | | 1 | | | | |
| 20 | 1425-621-004-00 | HOLDER/JE/9-9 | * | | 1 | | | | |
| | | | | | | | | | |
| | | | | | | | | | |
| | | | | | | | | | |
| | | | | | | | | | |
| | | | | | | | | | |
| | | | | | | | | | |
| | | | | | | | | | |
| | | | | | | | | | |
| | | | | | | | | | |
| | | | | | | | | | |

# FIG. 67 PIPING(PUMP)SYSTEM(225F)

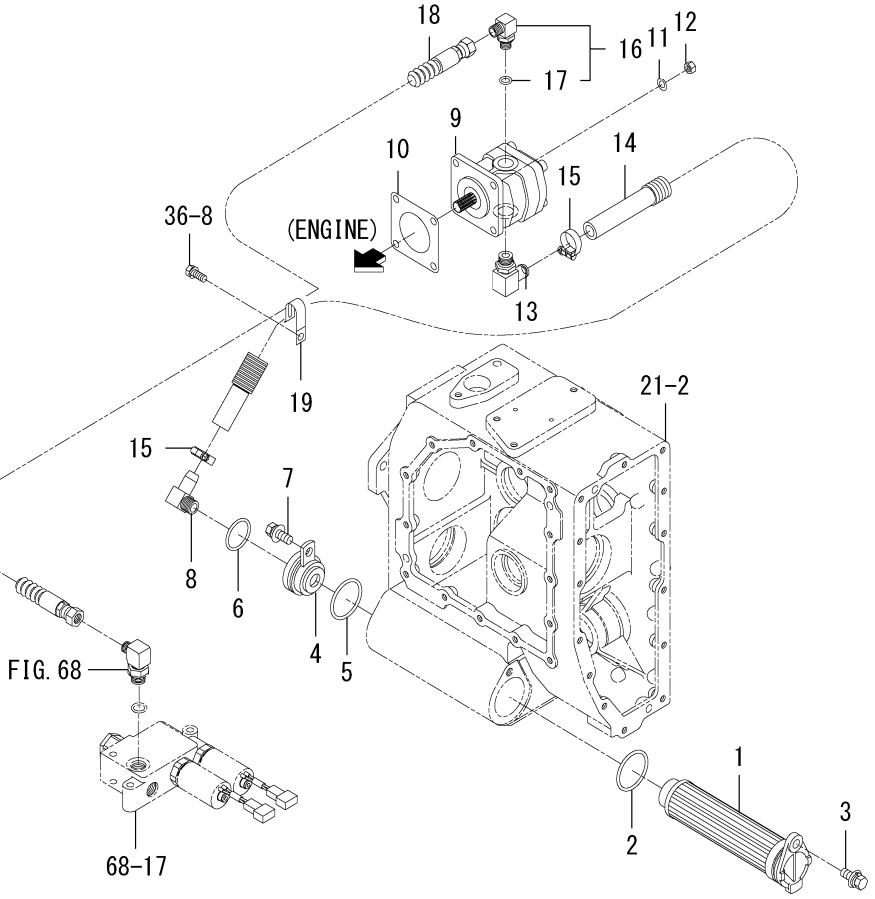


1832-508B-0100

| KEY | PART CODE | DESCRIPTION | SPC | TYPE OF MODEL | | ITC | COL | GRP | REMARKS |
|---|---|---|---|---|---|---|---|---|---|
| | | | | SF225F | SF237F | | | | |
| 1 | 1805-508-260-00 | FILTER/SUCTION/400 | * | 1 | | | | | |
| 2 | V721-103-104-50 | O-RING/1A,G45 | * | 1 | | | | | |
| 3 | V211-361-002-50 | BOLT,SP/M10X25 | * | 1 | | | | | |
| 4 | 1832-508-210-10 | CONNECTOR/SUCTION | * | 1 | | | | | |
| 5 | V721-103-104-50 | O-RING/1A,G45 | * | 1 | | | | | |
| 6 | V721-103-103-50 | O-RING/1A,G35 | * | 1 | | | | | |
| 7 | V211-361-002-50 | BOLT,SP/M10X25 | * | 1 | | | | | |
| 8 | 3626-370-005-00 | ADAPTER/90DEG/3/8 | * | 1 | | | | | |
| 9 | 3864-351-200-00 | PUNP/GEAR/5.2/L ASSY | * | 1 | | | | | |
| 10 | 1404-503-006-00 | PACKING,OIL PUMP | * | 1 | | | | | |
| 11 | V401-160-008-00 | WASHER,SP/M8 | * | 4 | | | | | |
| 12 | V304-260-008-00 | NUT/M8 | * | 4 | | | | | |
| 13 | 3814-354-015-10 | ADAPTOR(G3/8) ASSY | * | 1 | | | | | |
| 14 | 1752-508-005-00 | HOSE/DRAIN/MOTER | * | 1 | | | | | |
| 15 | J061-116-025-00 | CLAMP/WORM/16-25 | * | 2 | | | | | |
| 16 | 1705-408-230-00 | ADAPTER/L/G1/4 ASSY | * | 1 | | | | | |
| 17 | V720-112-401-10 | O-RING/1B,P11 | * | 1 | | | | | |
| 18 | 1832-508-610-00 | HOSE/HYDRO/1100 ASSY | * | 1 | | | | | |
| 19 | 1425-621-004-00 | HOLDER/JE/9-9 | * | 1 | | | | | |
| | | | | | | | | | |
| | | | | | | | | | |
| | | | | | | | | | |
| | | | | | | | | | |
| | | | | | | | | | |
| | | | | | | | | | |
| | | | | | | | | | |
| | | | | | | | | | |
| | | | | | | | | | |
| | | | | | | | | | |
| | | | | | | | | | |

# FIG. 68 PIPING(CONTROL)SYSTEM(1/2)

17～30-PLEASE SEE 2/2 PAGE2

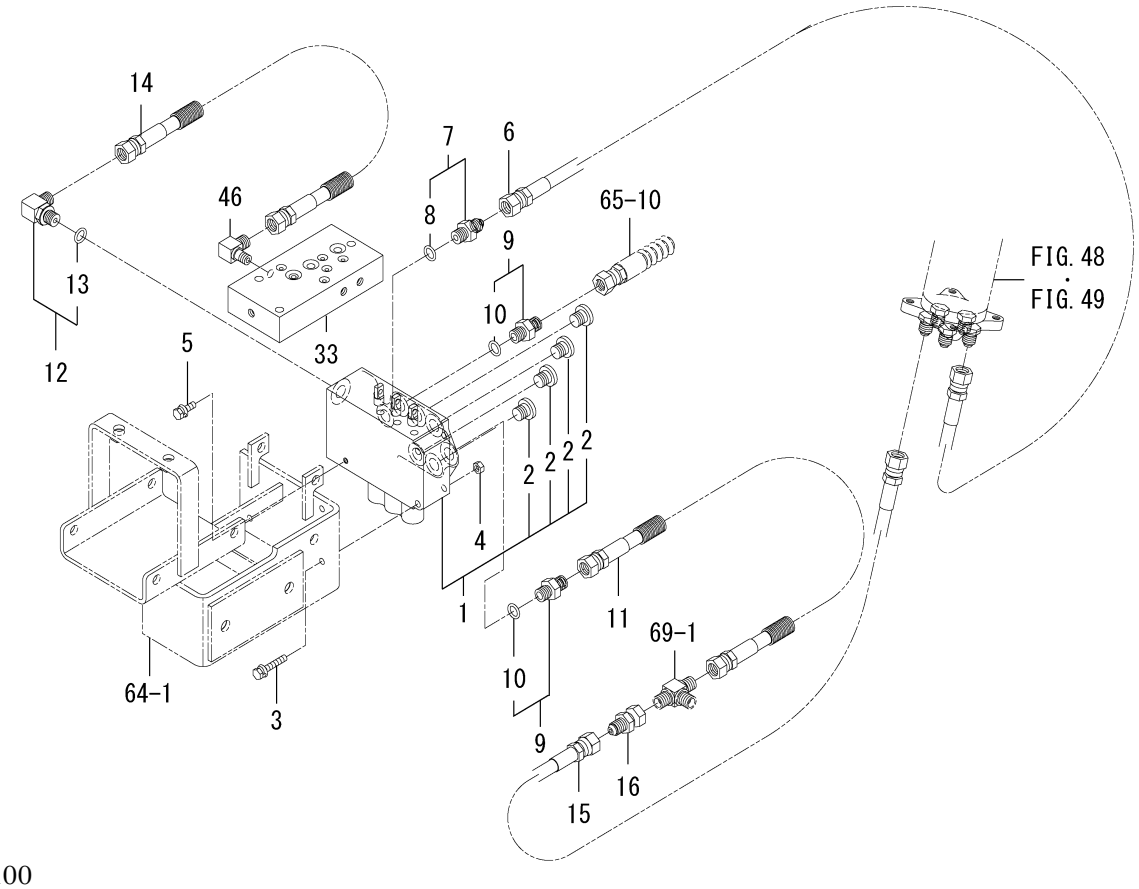


1832-509A-0100

| KEY | PART CODE | DESCRIPTION | SPC | TYPE OF MODEL | | ITC | COL | GRP | REMARKS |
|---|---|---|---|---|---|---|---|---|---|
| | | | | SF225F | SF237F | | | | |
| 1 | 1728-508-280-10 | VALVE/1S-2D ASSY | * | 1 | 1 | | | | |
| 2 | K275-001-003-00 | PLUG(PF1/4) | * | 4 | 4 | | | | |
| 3 | V210-360-603-50 | BOLT,SP/M6X35 | * | 2 | 2 | | | | |
| 4 | V301-260-006-00 | NUT/M6 | * | 2 | 2 | | | | |
| 5 | V210-360-602-00 | BOLT,SP/M6X20 | * | 1 | 1 | | | | |
| 6 | 1832-509-610-00 | HOSE/HYDRO/1900 ASSY | * | 1 | 1 | | | | |
| 7 | 1725-509-260-00 | ADAPTER/G1/4 ASSY | * | 1 | 1 | | | | |
| 8 | V720-112-401-10 | O-RING/1B,P11 | * | 1 | 1 | | | | |
| 9 | 3829-387-410-00 | ADPTER/G1/4.1/4 | * | 2 | 2 | | | | |
| 10 | V720-112-401-10 | O-RING/1B,P11 | * | 2 | 2 | | | | |
| 11 | 1832-509-640-00 | HOSE/HYDRO/600 ASSY | * | 1 | 1 | | | | |
| 12 | 1705-408-230-00 | ADAPTER/L/G1/4 ASSY | * | 1 | 1 | | | | |
| 13 | V720-112-401-10 | O-RING/1B,P11 | * | 1 | 1 | | | | |
| 14 | 1832-509-320-00 | HOSE/HYDRO/1000 ASSY | * | 1 | 1 | | | | |
| 15 | 1832-509-620-00 | HOSE/HYDRO/1620 ASSY | * | 1 | 1 | | | | |
| 16 | 1832-509-003-00 | ADAPTER/G1/4 | * | 1 | 1 | | | | |
| 17 | K200-282-000-00 | VALVE/282 ASSY | * | 1 | 1 | | | | |
| 18 | K200-152-110-20 | VALVE/REDUCE/21 SET | * | 1 | 1 | | | | |
| 19 | V720-112-402-20 | O-RING/1B,P22 | * | 1 | 1 | | | | |
| 20 | V720-112-401-60 | O-RING/1B,P16 | * | 3 | 3 | | | | |
| 21 | K290-003-000-30 | VALVE/PRV/B ASSY | * | 2 | 2 | | | | |
| 22 | V720-112-402-00 | O-RING/1B,P20 | * | 2 | 2 | | | | |
| 23 | K290-001-001-00 | O-RING/AS568/013 | * | 2 | 2 | | | | |
| 24 | K290-001-002-00 | O-RING/AS568/014 | * | 2 | 2 | | | | |
| 25 | K290-001-003-00 | O-RING/AS568/015 | * | 2 | 2 | | | | |
| 26 | V780-140-000-1T | PLUG/SCREW/SEAL | * | 1 | 1 | | | | |
| 27 | 1832-509-270-00 | RELIEFVALVE/090 ASSY | * | 1 | 1 | | | | |
| 28 | K250-090-002-00 | SPRING/HC045 | * | 1 | 1 | | | | |
| 29 | K250-090-003-00 | POPPET/1.3 | * | 1 | 1 | | | | |
| 30 | 1832-509-230-00 | ADAPTER/G1/4XG3/8 | * | 1 | 1 | | | | |

# FIG. 68 PIPING(CONTROL)SYSTEM(2/2)

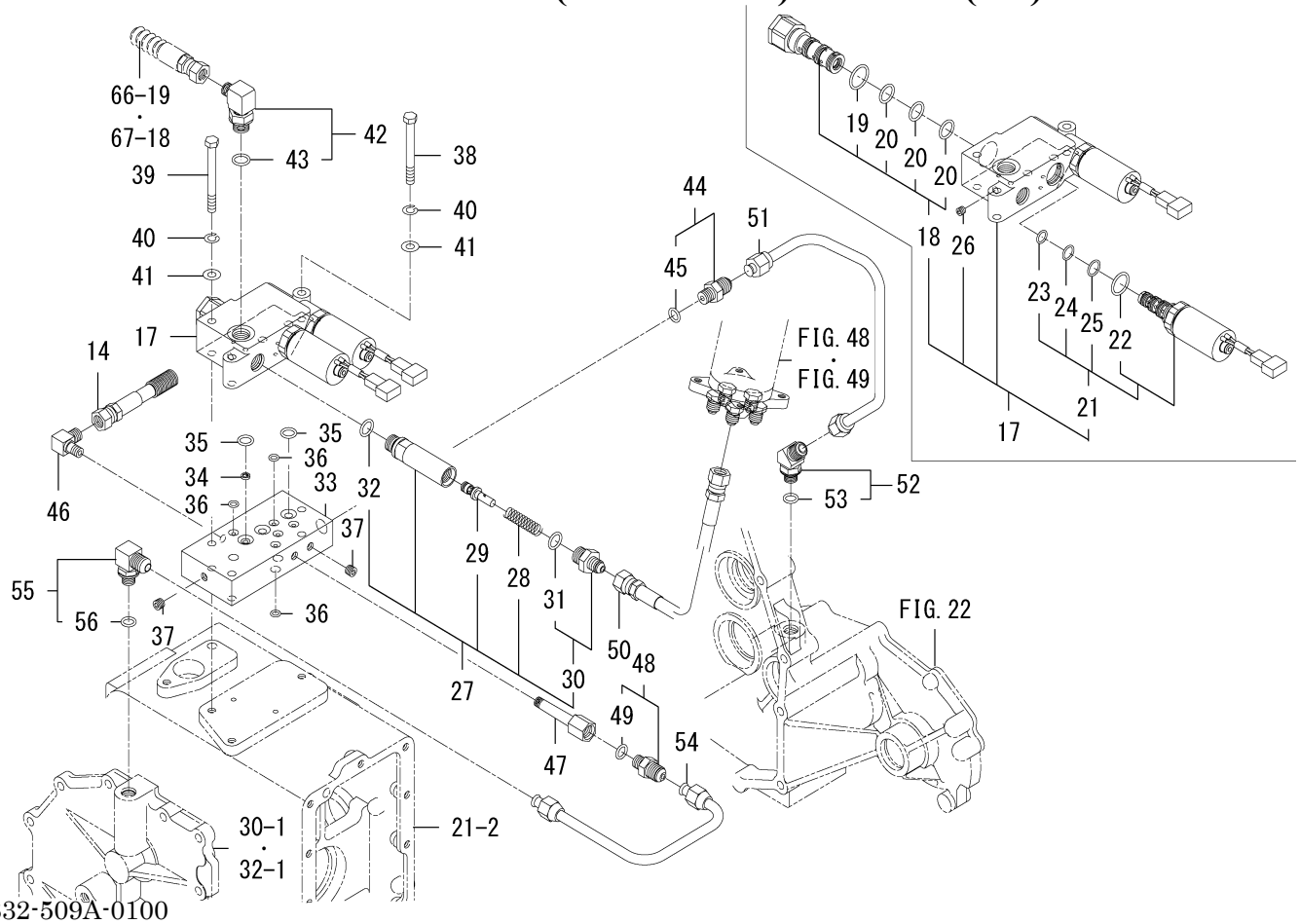


1832-509A-0100

| KEY | PART CODE | DESCRIPTION | SPC | TYPE OF MODEL | | ITC | COL | GRP | REMARKS |
|---|---|---|---|---|---|---|---|---|---|
| | | | | SF225F | SF237F | | | | |
| 31 | V720-112-401-40 | O-RING/1B,P14 | * | 1 | 1 | | | | |
| 32 | V720-112-401-40 | O-RING/1B,P14 | * | 1 | 1 | | | | |
| 33 | 1832-509-002-00 | BODY/VALVE/PTO | * | 1 | 1 | | | | |
| 34 | 1729-509-001-10 | FILTER/PORT/09 | * | 1 | 1 | | | | |
| 35 | V720-112-401-20 | O-RING/1B,P12 | * | 3 | 3 | | | | |
| 36 | V720-111-900-70 | O-RING/1B,P7 | * | 8 | 8 | | | | |
| 37 | V780-140-000-2T | PLUG/SCREW/SEAL | * | 2 | 2 | | | | |
| 38 | V201-260-807-50 | BOLT/M8X75 | * | 2 | 2 | | | | |
| 39 | V201-260-808-00 | BOLT/M8X80 | * | 1 | 1 | | | | |
| 40 | V401-160-008-00 | WASHER,SP/M8 | * | 3 | 3 | | | | |
| 41 | V411-260-008-00 | WASHER,PL/M8 | * | 3 | 3 | | | | |
| 42 | P103-521-006-10 | ELBOW/90DEG ASSY | * | 1 | 1 | | | | |
| 43 | V720-112-401-40 | O-RING/1B,P14 | * | 1 | 1 | | | | |
| 44 | 1650-509-280-00 | ADAPTER/PF1/4 ASSY | * | 1 | 1 | | | | |
| 45 | V720-112-401-10 | O-RING/1B,P11 | * | 1 | 1 | | | | |
| 46 | 1675-506-002-00 | ADAPTER/L/PT1/8 | * | 1 | 1 | | | | |
| 47 | 1809-509-006-00 | ADAPTER/PT1/8 | * | 1 | 1 | | | | |
| 48 | 1650-509-280-00 | ADAPTER/PF1/4 ASSY | * | 1 | 1 | | | | |
| 49 | V720-112-401-10 | O-RING/1B,P11 | * | 1 | 1 | | | | |
| 50 | 1832-509-630-10 | HOSE/HYDRO/1800 ASSY | * | 1 | 1 | 1 | | | |
| 51 | 1832-509-240-00 | PIPE/PTO/MOWER COMP | * | 1 | 1 | | | | |
| 52 | 1740-407-530-00 | ADAPTER/G1/4-M1 ASSY | * | 1 | 1 | | | | |
| 53 | V720-112-401-10 | O-RING/1B,P11 | * | 1 | 1 | | | | |
| 54 | 1832-509-350-00 | PIPE/BLOWER COMP | * | 1 | 1 | | | | |
| 55 | 1656-509-310-10 | ADAPTER/L/PF1/4 ASSY | * | 1 | 1 | | | | |
| 56 | V720-112-401-10 | O-RING/1B,P11 | * | 1 | 1 | | | | |
| | | | | | | | | | |
| | | | | | | | | | |
| | | | | | | | | | |
| | | | | | | | | | |

# FIG. 69 PIPING(HST)SYSTEM(237F)

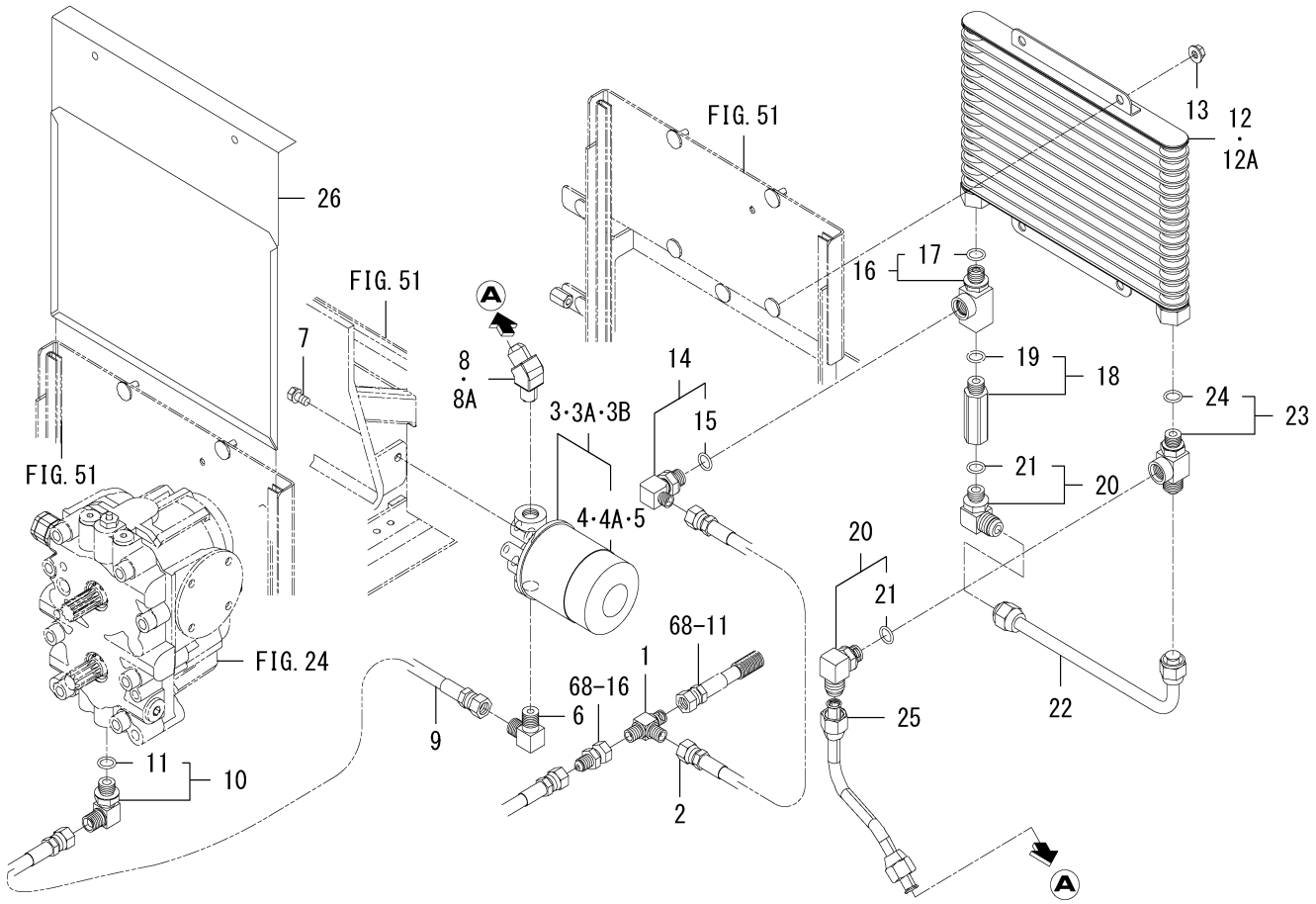


1832-510A-0100

| KEY | PART CODE | DESCRIPTION | SPC | TYPE OF MODEL | | ITC | COL | GRP | REMARKS |
|---|---|---|---|---|---|---|---|---|---|
| | | | | SF225F | SF237F | | | | |
| 1 | 8664-555-003-00 | ADAPTER/T | * | | 1 | | | | |
| 2 | 1832-509-640-00 | HOSE/HYDRO/600 ASSY | * | | 1 | | | | |
| 3 | 1771-510-250-00 | FILTER/OIL ASSY | * | | 1 -1188 | | | | |
| 3A | 1805-509-500-00 | FILTER/CHARGE ASSY | * | | 1 -1263 | | | | |
| 3B | 1805-509-500-10 | FILTER/CHARGE ASSY | * | | 1 1264- | 1 | | | |
| 4 | 1805-509-501-00 | CARTRIDGE/10 | * | | 1 -1263 | | | | |
| 4A | 1805-509-501-10 | CARTRIDGE/10 | * | | 1 1264- | 1 | | | |
| 5 | 1771-510-251-00 | FILTER/OIL ASSY | * | | 1 -1188 | | | | |
| 6 | 3768-185-015-20 | ADAPTER/90 | * | | 1 | | | | |
| 7 | V211-260-801-60 | BOLT,S/M8X16 | * | | 2 | | | | |
| 8 | 1832-510-061-00 | ADAPTER/45ß/R3/8XM20 | * | | 1 -1112 | | | | |
| 8A | 1832-510-061-10 | ADAPTER/45ß/R3/8XM20 | * | | 1 1113- | 1 | | | |
| 9 | 1792-509-310-00 | HOSE/650 ASSY | * | | 1 | | | | |
| 10 | 1689-502-250-00 | ADAPTER/L/G3/8 ASSY | * | | 1 | | | | |
| 11 | V720-112-401-40 | O-RING/1B,P14 | * | | 1 | | | | |
| 12 | 1801-509-530-00 | COOLER/OIL ASSY | * | | 1 -1235 | | | | |
| 12A | 1801-509-530-10 | COOLER/OIL ASSY | * | | 1 1236- | 1 | | | |
| 13 | V362-260-008-00 | NUT/WASHER/M8 | * | | 2 | | | | |
| 14 | P103-521-006-10 | ELBOW/90DEG ASSY | * | | 1 | | | | |
| 15 | V720-112-401-40 | O-RING/1B,P14 | * | | 1 | | | | |
| 16 | 1740-517-600-00 | ADAPTER/G3/8ASSY | * | | 1 | | | | |
| 17 | V720-112-401-40 | O-RING/1B,P14 | * | | 1 | | | | |
| 18 | K220-002-000-00 | VALVE/CHECK ASSY | * | | 1 | | | | |
| 19 | V720-112-401-40 | O-RING/1B,P14 | * | | 1 | | | | |
| 20 | 1650-509-310-00 | ADAPTER/L/PF3/8 ASSY | * | | 2 | | | | |
| 21 | V720-112-401-40 | O-RING/1B,P14 | * | | 2 | | | | |
| 22 | 1832-510-220-00 | PIPE/COOLER COMP | * | | 1 | | | | |
| 23 | 1740-517-610-00 | ADAPTER/G3/8ASSY | * | | 1 | | | | |
| 24 | V720-112-401-40 | O-RING/1B,P14 | * | | 1 | | | | |
| 25 | 1832-510-620-00 | PIPE/FILTER COMP | * | | 1 | | | | |

# FIG. 69 PIPING(HST)SYSTEM(237F)

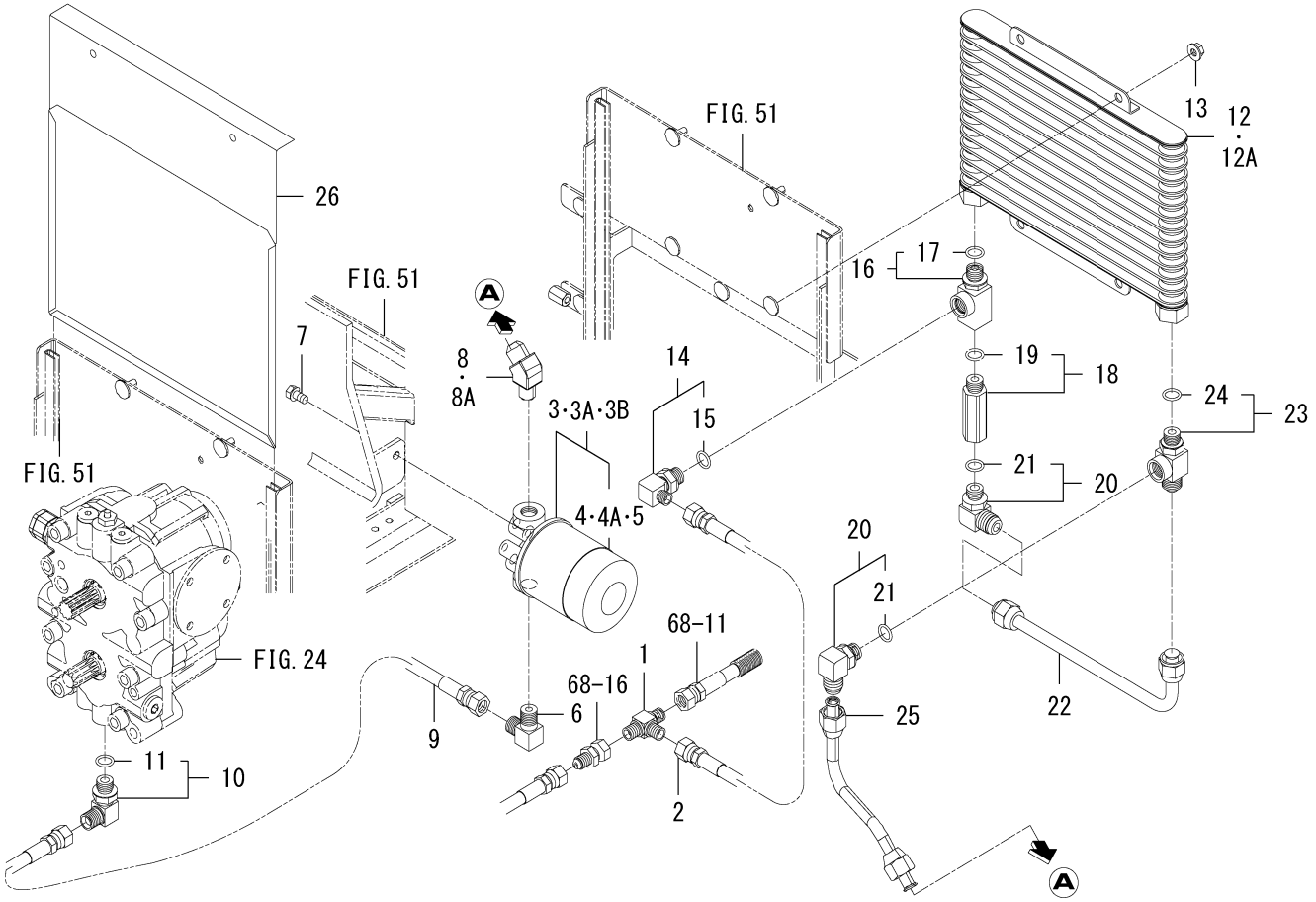


1832-510A-0100

| KEY | PART CODE | DESCRIPTION | SPC | TYPE OF MODEL | | ITC | COL | GRP | REMARKS |
|---|---|---|---|---|---|---|---|---|---|
| | | | | SF225F | SF237F | | | | |
| 26 | 1832-510-630-10 | NET/COOLER/OIL/237 | * | | 1 | 1 | | | |

# FIG. 70 PIPING(HST)SYSTEM(225F)

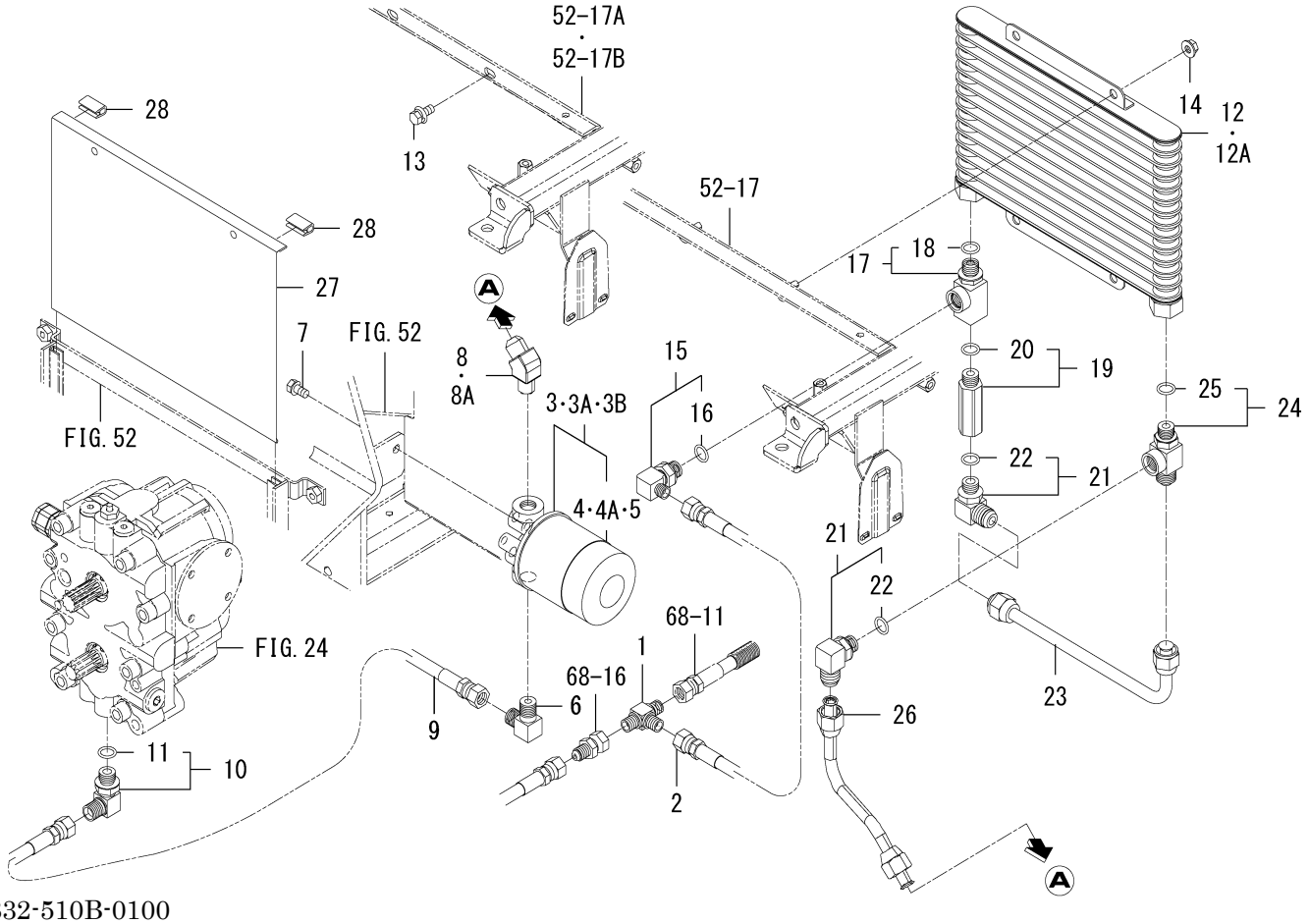


1832-510B-0100

| KEY | PART CODE | DESCRIPTION | SPC | TYPE OF MODEL | | ITC | COL | GRP | REMARKS |
|---|---|---|---|---|---|---|---|---|---|
| | | | | SF225F | SF237F | | | | |
| 1 | 8664-555-003-00 | ADAPTER/T | * | 1 | | | | | |
| 2 | 1832-509-640-00 | HOSE/HYDRO/600 ASSY | * | 1 | | | | | |
| 3 | 1771-510-250-00 | FILTER/OIL ASSY | * | 1 -816 | | | | | |
| 3A | 1805-509-500-00 | FILTER/CHARGE ASSY | * | 1 -984 | | | | | |
| 3B | 1805-509-500-10 | FILTER/CHARGE ASSY | * | 1 985- | | 1 | | | |
| 4 | 1805-509-501-00 | CARTRIDGE/10 | * | 1 -984 | | | | | |
| 4A | 1805-509-501-10 | CARTRIDGE/10 | * | 1 985- | | 1 | | | |
| 5 | 1771-510-251-00 | FILTER/OIL ASSY | * | 1 -816 | | | | | |
| 6 | 3768-185-015-20 | ADAPTER/90 | * | 1 | | | | | |
| 7 | V211-260-801-60 | BOLT,S/M8X16 | * | 2 | | | | | |
| 8 | 1832-510-061-00 | ADAPTER/45ß/R3/8XM20 | * | 1 -759 | | | | | |
| 8A | 1832-510-061-10 | ADAPTER/45ß/R3/8XM20 | * | 1 760- | | 1 | | | |
| 9 | 1792-509-310-00 | HOSE/650 ASSY | * | 1 | | | | | |
| 10 | 1689-502-250-00 | ADAPTER/L/G3/8 ASSY | * | 1 | | | | | |
| 11 | V720-112-401-40 | O-RING/1B,P14 | * | 1 | | | | | |
| 12 | 1801-509-530-00 | COOLER/OIL ASSY | * | 1 -863 | | | | | |
| 12A | 1801-509-530-10 | COOLER/OIL ASSY | * | 1 864- | | 1 | | | |
| 13 | V211-360-802-00 | BOLT,SP/M8X20 | * | 2 111- | | | | | |
| 14 | V362-260-008-00 | NUT/WASHER/M8 | * | 2 | | | | | |
| 15 | P103-521-006-10 | ELBOW/90DEG ASSY | * | 1 | | | | | |
| 16 | V720-112-401-40 | O-RING/1B,P14 | * | 1 | | | | | |
| 17 | 1740-517-600-00 | ADAPTER/G3/8ASSY | * | 1 | | | | | |
| 18 | V720-112-401-40 | O-RING/1B,P14 | * | 1 | | | | | |
| 19 | K220-002-000-00 | VALVE/CHECK ASSY | * | 1 | | | | | |
| 20 | V720-112-401-40 | O-RING/1B,P14 | * | 1 | | | | | |
| 21 | 1650-509-310-00 | ADAPTER/L/PF3/8 ASSY | * | 2 | | | | | |
| 22 | V720-112-401-40 | O-RING/1B,P14 | * | 2 | | | | | |
| 23 | 1832-510-220-00 | PIPE/COOLER COMP | * | 1 | | | | | |
| 24 | 1740-517-610-00 | ADAPTER/G3/8ASSY | * | 1 | | | | | |
| 25 | V720-112-401-40 | O-RING/1B,P14 | * | 1 | | | | | |

# FIG. 70 PIPING(HST)SYSTEM(225F)

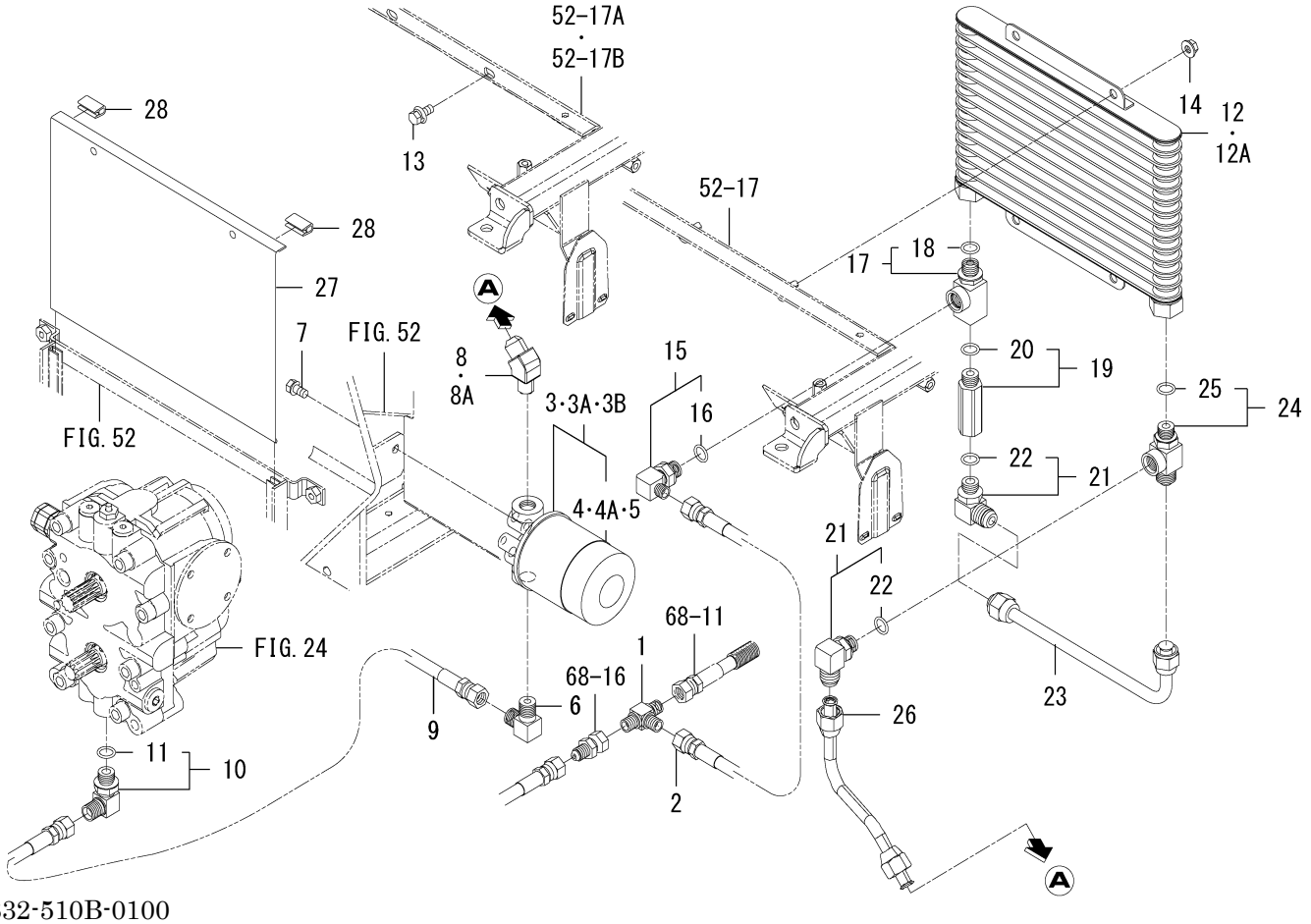


1832-510B-0100

| KEY | PART CODE | DESCRIPTION | SPC | TYPE OF MODEL | | ITC | COL | GRP | REMARKS |
|---|---|---|---|---|---|---|---|---|---|
| | | | | SF225F | SF237F | | | | |
| 26 | 1832-510-620-00 | PIPE/FILTER COMP | * | 1 | | | | | |
| 27 | 1832-510-001-10 | NET/COOLER/OIL | * | 1 | | | | | |
| 28 | 3805-371-007-00 | PAD/25 | * | 2 | | | | | |

# FIG. 71 LINK(LIFT)SYSTEM

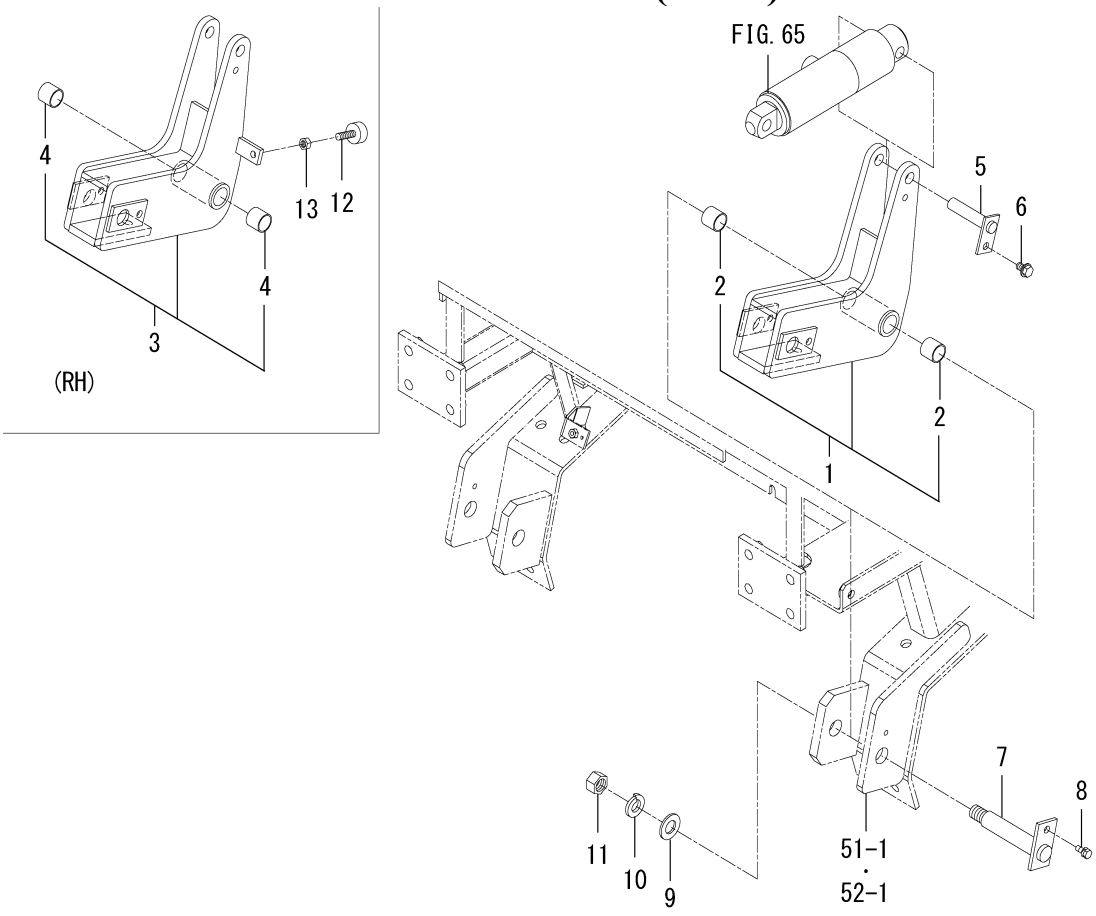


1832-553 -0100

| KEY | PART CODE | DESCRIPTION | SPC | TYPE OF MODEL | | ITC | COL | GRP | REMARKS |
|---|---|---|---|---|---|---|---|---|---|
| | | | | SF225F | SF237F | | | | |
| 1 | 1809-553-210-20 | ARM/LIFT/LH ASSY | * | 1 | 1 | | | | |
| 2 | 8650-203-001-10 | BUSH/20X23X20 | * | 2 | 2 | | | | |
| 3 | 1809-553-240-20 | ARM/LIFT/RH ASSY | * | 1 | 1 | | | | |
| 4 | 8650-203-001-10 | BUSH/20X23X20 | * | 2 | 2 | | | | |
| 5 | 1809-553-280-00 | PIN/14X63 COMP | * | 2 | 2 | | | | |
| 6 | V211-560-801-60 | BOLT,S/M8X16/7T | * | 2 | 2 | | | | |
| 7 | 1809-553-230-00 | PIN/M16X112 COMP | * | 2 | 2 | | | | |
| 8 | V211-560-801-60 | BOLT,S/M8X16/7T | * | 2 | 2 | | | | |
| 9 | V411-260-016-00 | WASHER,PL/M16 | * | 2 | 2 | | | | |
| 10 | V401-160-016-00 | WASHER,SP/M16 | * | 2 | 2 | | | | |
| 11 | V304-260-016-00 | NUT/M16 | * | 2 | 2 | | | | |
| 12 | 1729-702-003-00 | INSULATOR | * | 1 | 1 | | | | |
| 13 | V304-260-008-00 | NUT/M8 | * | 1 | 1 | | | | |

# FIG. 72 HOOD SYSTEM

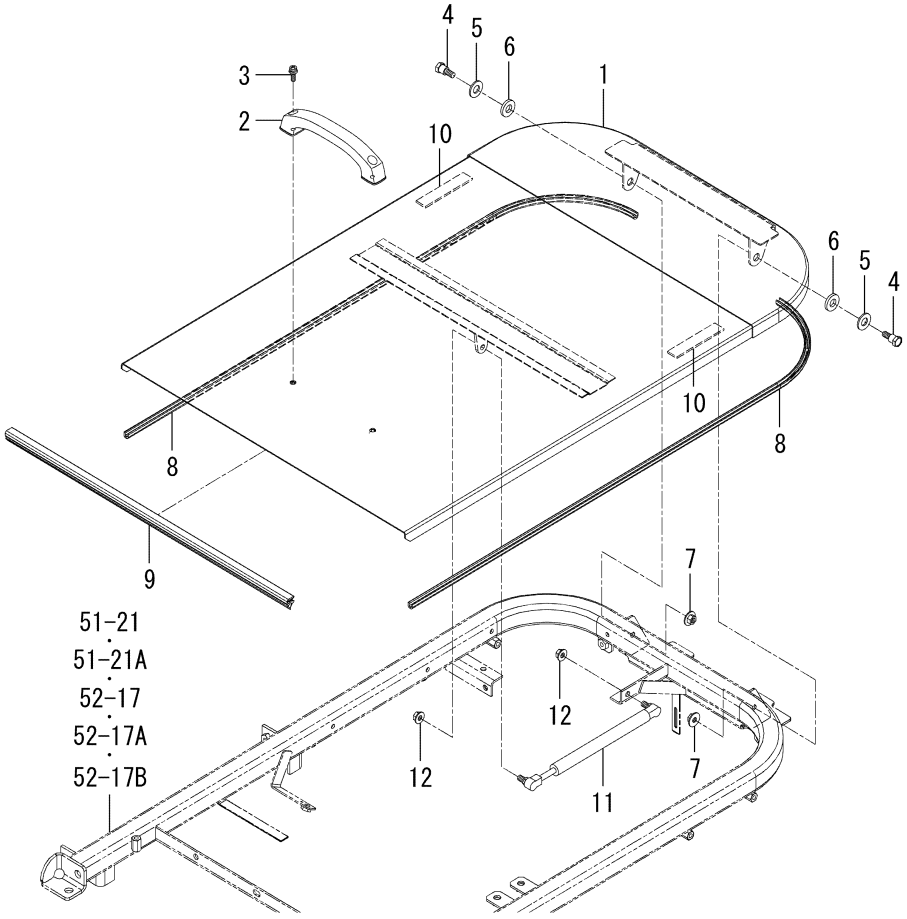


1832-601A-0100

| KEY | PART CODE | DESCRIPTION | SPC | TYPE OF MODEL | | ITC | COL | GRP | REMARKS |
|---|---|---|---|---|---|---|---|---|---|
| | | | | SF225F | SF237F | | | | |
| 1 | 1832-601-610-10 | COVER/ENGINE COMP | * | 1 | 1 | | | | |
| 2 | 3670-236-003-00 | GRIP | * | 1 | 1 | | | | |
| 3 | V120-366-002-00 | SCREW,SP/M6X20 | * | 2 | 2 | | | | |
| 4 | 1689-621-008-10 | BOLT | * | 2 | 2 | | | | |
| 5 | V411-260-012-00 | WASHER,PL/M12 | * | 2 | 2 | | | | |
| 6 | 1689-621-007-00 | WASHER/12X26X04 | * | 2 | 2 | | | | |
| 7 | V363-260-008-00 | NUT/WASHER/M8 | * | 2 | 2 | | | | |
| 8 | 1809-601-001-00 | INSULATOR/1000 | * | 2 | 2 | | | | |
| 9 | 1756-102-007-00 | INSULATOR/595 | * | 1 | 1 | | | | |
| 10 | 1792-658-006-00 | INSULATOR/20X100X03 | * | 2 | 2 | | | | |
| 11 | 1729-601-280-10 | DUMPER/HOOD ASSY | * | 1 | 1 | | | | |
| 12 | V362-260-008-00 | NUT/WASHER/M8 | * | 2 | 2 | | | | |

# FIG. 73 COVER(STEERING)SYSTEM

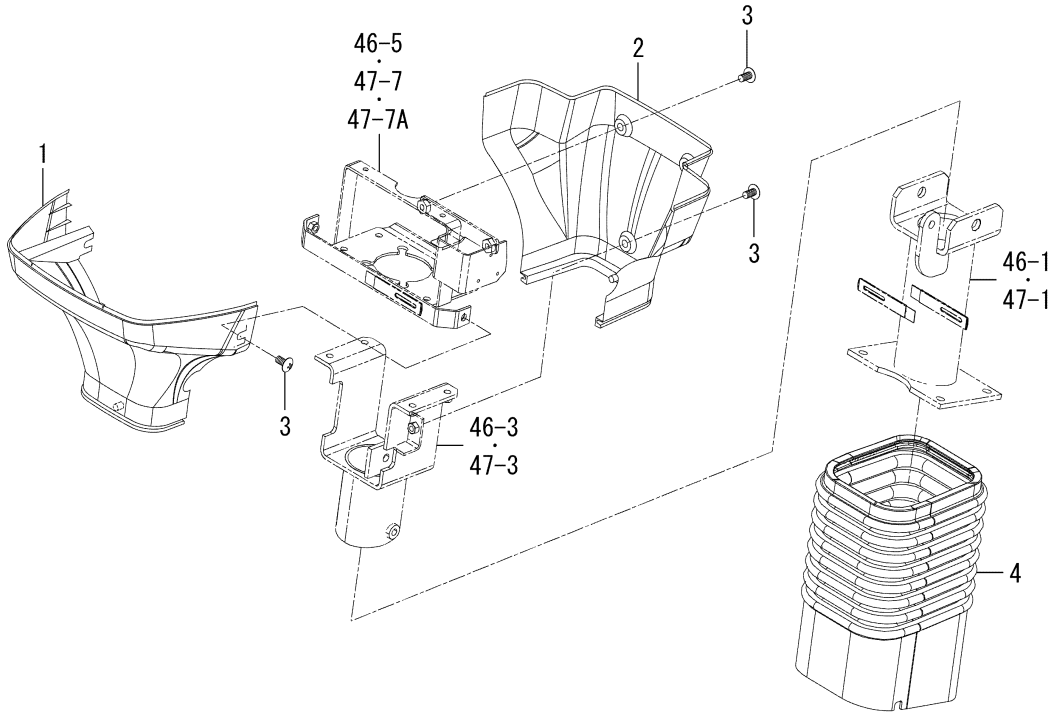


1832-603 -0100

| KEY | PART CODE | DESCRIPTION | SPC | TYPE OF MODEL | | ITC | COL | GRP | REMARKS |
|---|---|---|---|---|---|---|---|---|---|
| | | | | SF225F | SF237F | | | | |
| 1 | 1809-603-001-00 | COVER/COLUMN/F | * | 1 | 1 | | | | |
| 2 | 1809-603-002-00 | COVER/COLUMN/R | * | 1 | 1 | | | | |
| 3 | 3824-232-021-00 | SCREW/TRUSS/M08X20 | * | 5 | 5 | | | | |
| 4 | 1832-603-001-10 | BOOT/COVER/COLUMN | * | 1 | 1 | | | | |

# FIG. 74 FENDER SYSTEM

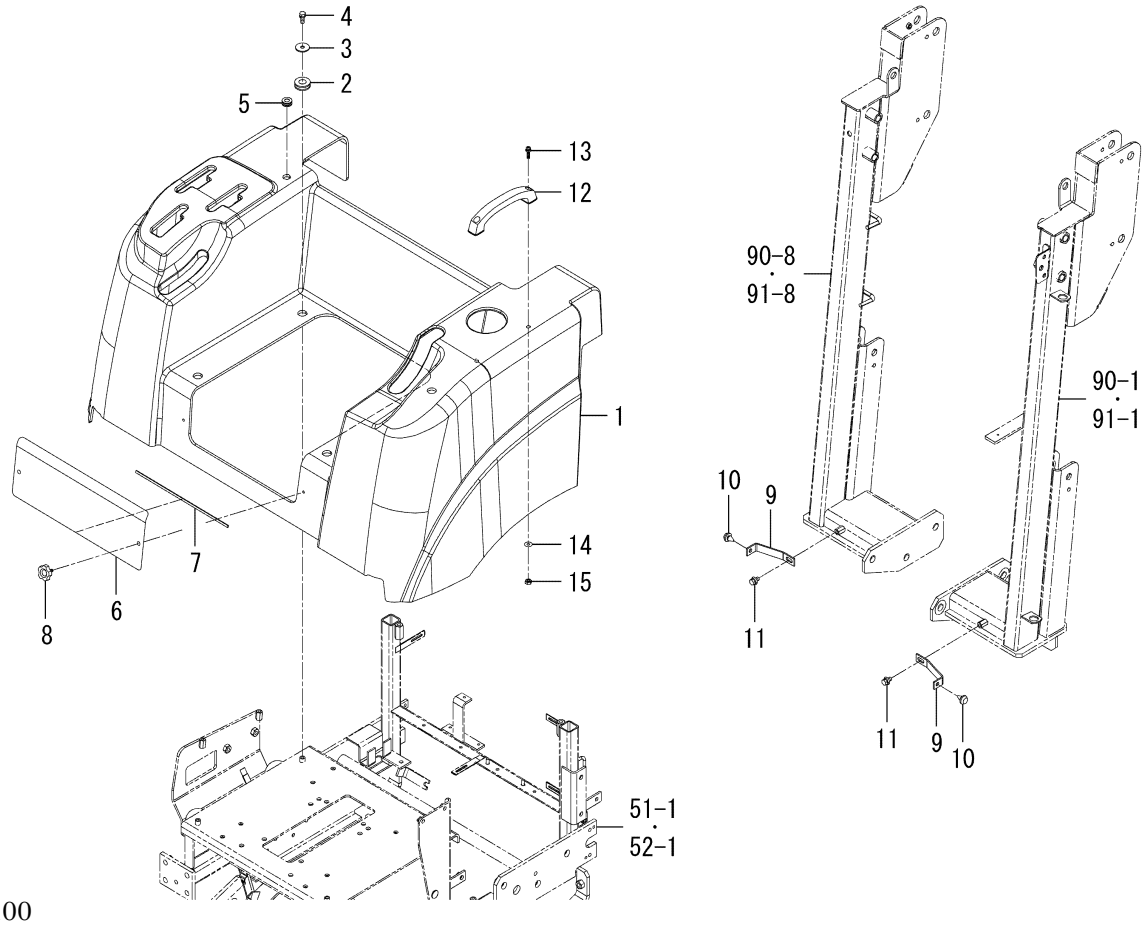


1832-606A-0100

| KEY | PART CODE | DESCRIPTION | SPC | TYPE OF MODEL | | ITC | COL | GRP | REMARKS |
|---|---|---|---|---|---|---|---|---|---|
| | | | | SF225F | SF237F | | | | |
| 1 | 1832-606-061-00 | FENDER/SF2 | * | 1 | 1 | | | | |
| 2 | 1729-741-007-00 | GROMMET/17X21X05 | * | 4 | 4 | | | | |
| 3 | 1376-606-005-00 | WASHER/9X32X2 | * | 4 | 4 | | | | |
| 4 | V211-260-802-00 | BOLT,S/M8X20 | * | 4 | 4 | | | | |
| 5 | 1704-740-008-10 | GROMMET/13X17X05 | * | 1 | 1 | | | | |
| 6 | 1809-606-002-00 | COVER/FRONT | * | 1 | 1 | | 4L | | |
| 7 | 1786-631-005-00 | INSULATOR/300 | * | 1 | 1 | | | | |
| 8 | 1102-611-006-10 | KNOB/SET/M06X15 | * | 2 | 2 | | | | |
| 9 | 1832-606-002-00 | STAY/FENDER | * | 2 | 2 | | | | |
| 10 | 1432-616-002-00 | RUBBER,CUSHION | * | 2 | 2 | | | | |
| 11 | V211-360-801-60 | BOLT,SP/M8X16 | * | 2 | 2 | | | | |
| 12 | 3670-236-003-00 | GRIP | * | 1 | 1 | | | | |
| 13 | V120-366-002-50 | SCREW,SP/M6X25 | * | 2 | 2 | | | | |
| 14 | 1146-601-002-00 | WASHER/07X18X02 | * | 2 | 2 | | | | |
| 15 | 1118-606-002-10 | U-NUT | * | 2 | 2 | | | | |

# FIG. 75 SEAT SYSTEM
# (Z TYPE-STANDARD/EXCEPT Z TYPE-OPTION)

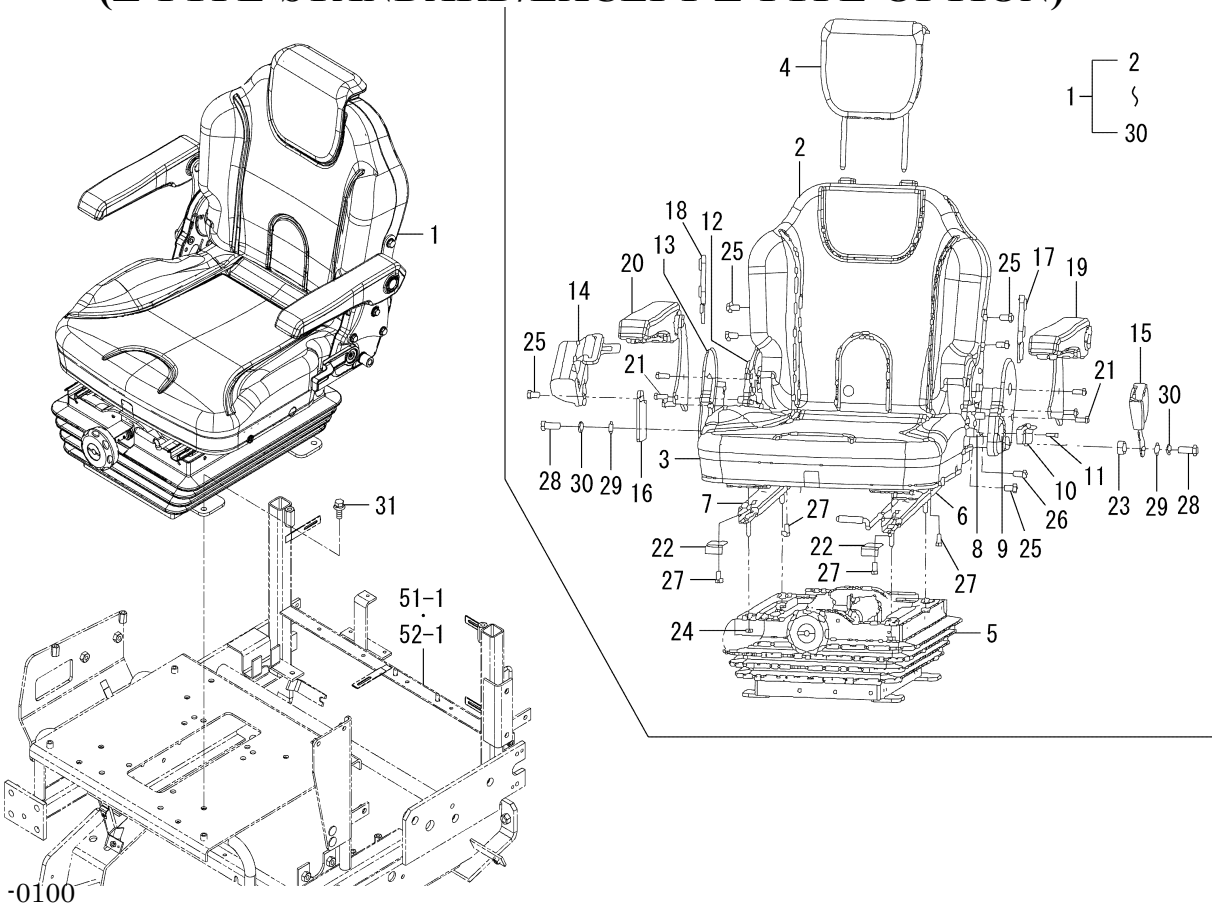


1832-611 -0100

| KEY | PART CODE | DESCRIPTION | SPC | TYPE OF MODEL | | ITC | COL | GRP | REMARKS |
|---|---|---|---|---|---|---|---|---|---|
| | | | | SF225F | SF237F | | | | |
| 1 | 1832-611-210-10 | SEAT ASSY | * | 1 | 1 | | | | |
| 2 | 1832-611-211-00 | BACK ASSY | * | 1 | 1 | | | | |
| 3 | 1832-611-212-00 | CUSHION ASSY | * | 1 | 1 | | | | |
| 4 | 1832-611-239-00 | SHOLDERREST ASSY | * | 1 | 1 | | | | |
| 5 | 1832-611-213-00 | SUSPENSION ASSY | * | 1 | 1 | | | | |
| 6 | 1832-611-214-00 | SLIDE/LEVER ASSY | * | 1 | 1 | | | | |
| 7 | 1832-611-215-00 | SLIDE ASSY | * | 1 | 1 | | | | |
| 8 | 1832-611-216-00 | RECLINER ASSY | * | 1 | 1 | | | | |
| 9 | 1832-611-217-00 | RECLINERCOVER | * | 1 | 1 | | | | |
| 10 | 1832-611-218-00 | RECLINERLEVER | * | 1 | 1 | | | | |
| 11 | 1832-611-219-00 | ROUNDBOLT | * | 1 | 1 | | | | |
| 12 | 1832-611-221-00 | HINGE ASSY | * | 1 | 1 | | | | |
| 13 | 1832-611-222-00 | HINGECOVER | * | 1 | 1 | | | | |
| 14 | 1832-611-223-00 | BELT ASSY | * | 1 | 1 | | | | |
| 15 | 1739-611-850-00 | BUCKLE ASSY | * | 1 | 1 | | | | |
| 16 | 1832-611-224-00 | STAY/BELT ASSY | * | 1 | 1 | | | | |
| 17 | 1832-611-225-00 | COVER/ARM/LH | * | 1 | 1 | | | | |
| 18 | 1832-611-226-00 | COVER/ARM/RH | * | 1 | 1 | | | | |
| 19 | 1832-611-227-00 | ARMREST/LH ASSY | * | 1 | 1 | | | | |
| 20 | 1832-611-228-00 | ARMREST/RH ASSY | * | 1 | 1 | | | | |
| 21 | 1832-611-229-00 | FLANGEBOLT | * | 6 | 6 | | | | |
| 22 | 1832-611-231-00 | STOPPERBRACKET | * | 2 | 2 | | | | |
| 23 | 1832-611-241-00 | BUSH/BELT | * | 1 | 1 | | | | |
| 24 | 1832-611-238-00 | FLANGENUT | * | 4 | 4 | | | | |
| 25 | 1832-611-232-00 | FLANGEBOLT | * | 7 | 7 | | | | |
| 26 | 1832-611-233-00 | FLANGEBOLT | * | 2 | 2 | | | | |
| 27 | 1832-611-234-00 | FLANGEBOLT | * | 4 | 4 | | | | |
| 28 | 1832-611-235-00 | HEXBOLT | * | 2 | 2 | | | | |
| 29 | 1832-611-236-00 | WASHER | * | 2 | 2 | | | | |
| 30 | 1832-611-237-00 | SPRINGWASHER | * | 2 | 2 | | | | |

# FIG. 75 SEAT SYSTEM
# (Z TYPE-STANDARD/EXCEPT Z TYPE-OPTION)

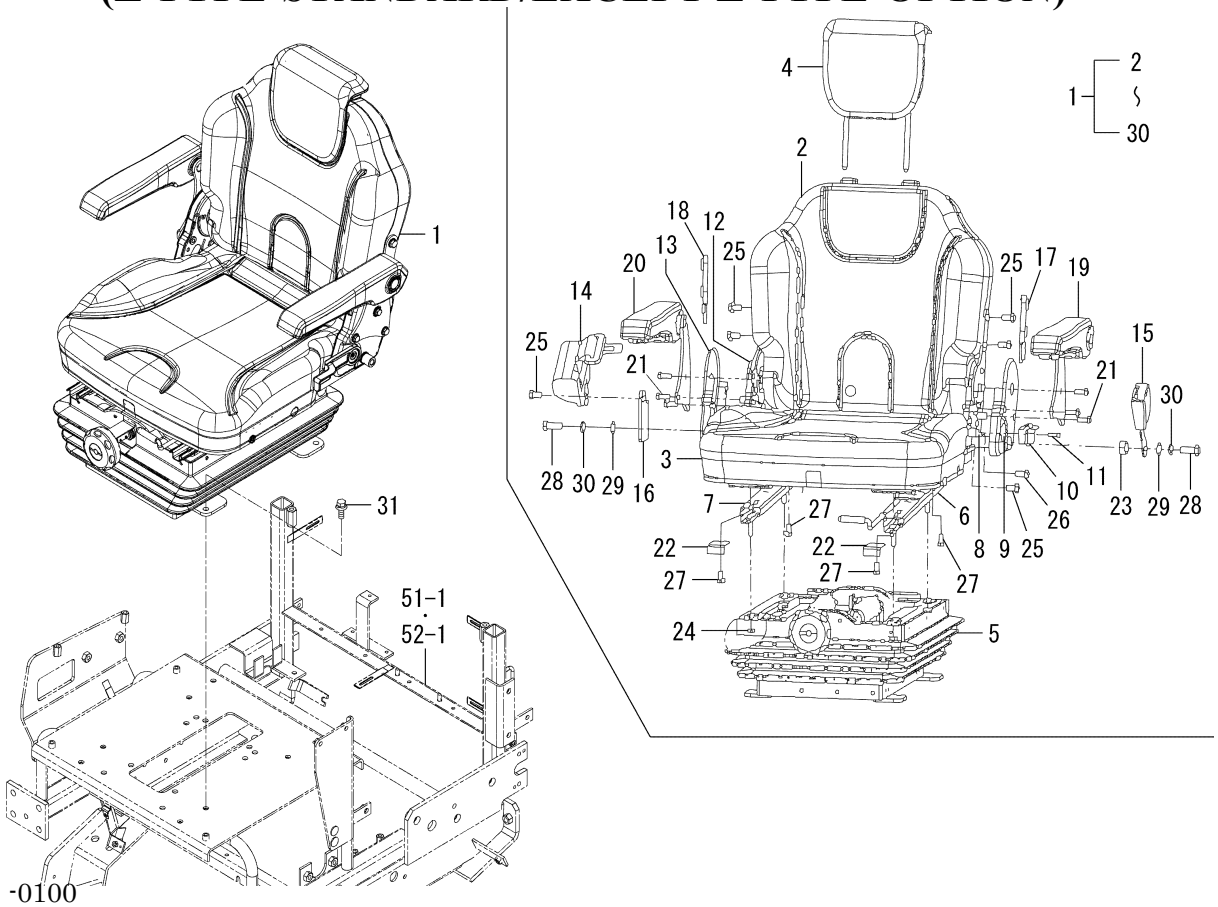


1832-611 -0100

| KEY | PART CODE | DESCRIPTION | SPC | TYPE OF MODEL | | ITC | COL | GRP | REMARKS |
|---|---|---|---|---|---|---|---|---|---|
| | | | | SF225F | SF237F | | | | |
| 31 | V211-660-802-50 | BOLT,SP/M8X25/7T | * | 4 | 4 | | | | |

# FIG. 76 FLOOR SYSTEM

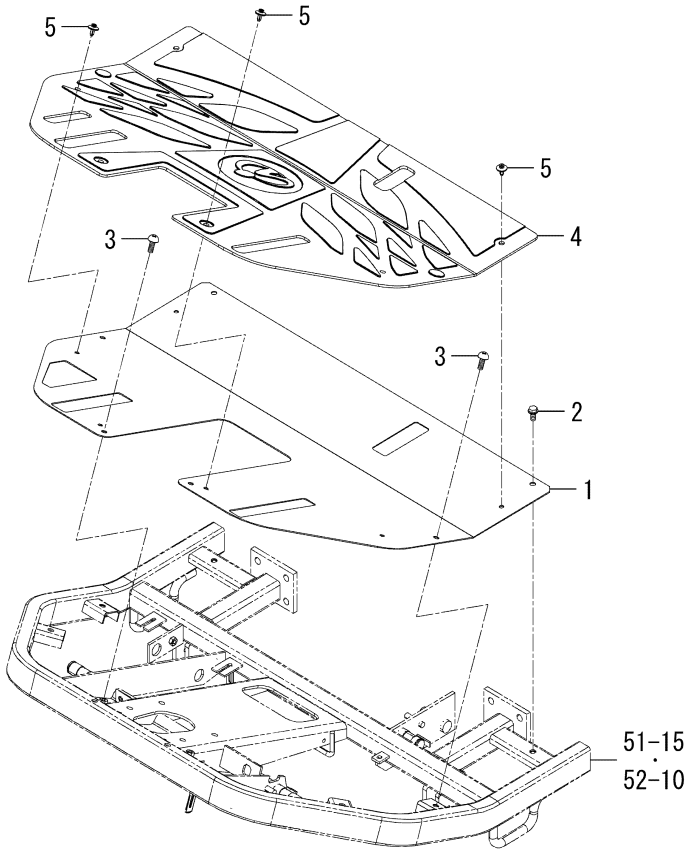


1832-630A-0100

| KEY | PART CODE | DESCRIPTION | SPC | TYPE OF MODEL | | ITC | COL | GRP | REMARKS |
|---|---|---|---|---|---|---|---|---|---|
| | | | | SF225F | SF237F | | | | |
| 1 | 1832-630-001-10 | FLOOR | * | 1 | 1 | | | | |
| 2 | V231-360-801-60 | FLANGEBOLT/M8X16 | * | 2 | 2 | | | | |
| 3 | 3824-232-021-00 | SCREW/TRUSS/M08X20 | * | 4 | 4 | | | | |
| 4 | 1832-630-061-00 | MAT/STEP | * | 1 | 1 | | | | |
| 5 | 1636-611-011-00 | RIVET/SCREW ASSY | * | 6 | 6 | | | | |

# FIG. 77 LIGHT SYSTEM(237F-B TYPE)

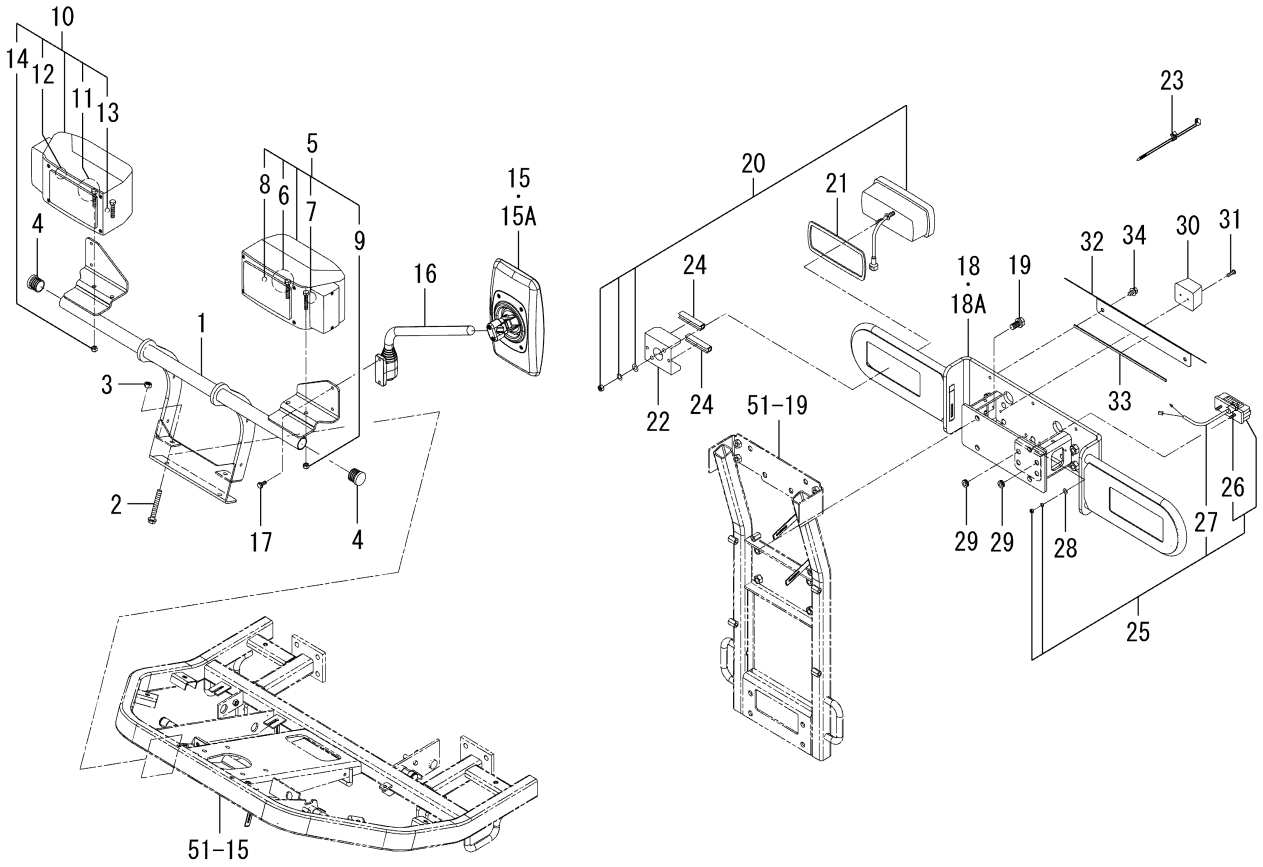


1832-650C-0100

| KEY | PART CODE | DESCRIPTION | SPC | TYPE OF MODEL | | ITC | COL | GRP | REMARKS |
|---|---|---|---|---|---|---|---|---|---|
| | | | | SF225F | SF237F | | | | |
| 1 | 1832-650-210-00 | STAY/LAMP/FRONT COMP | * | | 1 | | | | |
| 2 | V231-361-007-00 | FLANGEBOLT/M10X70 | * | | 2 | | | | |
| 3 | 1725-611-087-00 | U-NUT/M10X1.5 | * | | 2 | | | | |
| 4 | 1809-650-006-00 | CAP/PIPE | * | | 2 | | | | |
| 5 | 1809-650-230-00 | LAMP/HEAD/LH ASSY | * | | 1 | | | | |
| 6 | 1774-650-212-00 | BULB/H4/60/55W | * | | 1 | | | | |
| 7 | 1772-654-216-00 | BULB/12V21W | * | | 1 | | | | |
| 8 | 1809-650-232-00 | BULB/12V4W | * | | 1 | | | | |
| 9 | 1809-650-233-00 | UNUT(M8) | * | | 2 | | | | |
| 10 | 1809-650-240-00 | LAMP/HEAD/RH ASSY | * | | 1 | | | | |
| 11 | 1774-650-212-00 | BULB/H4/60/55W | * | | 1 | | | | |
| 12 | 1772-654-216-00 | BULB/12V21W | * | | 1 | | | | |
| 13 | 1809-650-232-00 | BULB/12V4W | * | | 1 | | | | |
| 14 | 1809-650-233-00 | UNUT(M8) | * | | 2 | | | | |
| 15 | 1739-619-320-00 | MIRROR ASSY | * | | 2 -340 | | | | |
| 15A | 1739-619-320-10 | MIRROR ASSY | * | | 2 341- | 1 | | | |
| 16 | 1739-619-310-00 | ARM/MIRROR ASSY | * | | 2 | | | | |
| 17 | V230-360-601-60 | FLANGEBOLT/M6X16 | * | | 4 | | | | |
| 18 | 1832-650-660-10 | BUMPER/REAR COMP | * | | 1 -487 | | | | |
| 18A | 1832-650-660-20 | BUMPER/REAR COMP | * | | 1 488- | 1 | | | |
| 19 | 6901-931-225-00 | BOLT,SEMS/M12X25/7T | * | | 4 | | | | |
| 20 | 1772-654-210-00 | LAMP/COMBINATION/REA | * | | 2 | | | | FIG 110 |
| 21 | 1772-654-001-00 | INSULATOR/LAMP | * | | 2 | | | | |
| 22 | 1772-654-002-10 | PLATE/U/70X85 | * | | 2 | | | | |
| 23 | 1560-666-004-00 | BAND | * | | 2 | | | | |
| 24 | P113-201-007-00 | TRIM/70 | * | | 4 | | | | |
| 25 | 1674-654-270-00 | LAMP/NUMBERPLAT SET | * | | 1 | | | | |
| 26 | 1674-654-271-00 | BULB/12V/5W | * | | 1 | | | | |
| 27 | 1674-654-272-00 | HARNESS/LAMP | * | | 1 | | | | |
| 28 | V411-260-006-00 | WASHER,PL/M6 | * | | 2 | | | | |

# FIG. 77 LIGHT SYSTEM(237F-B TYPE)

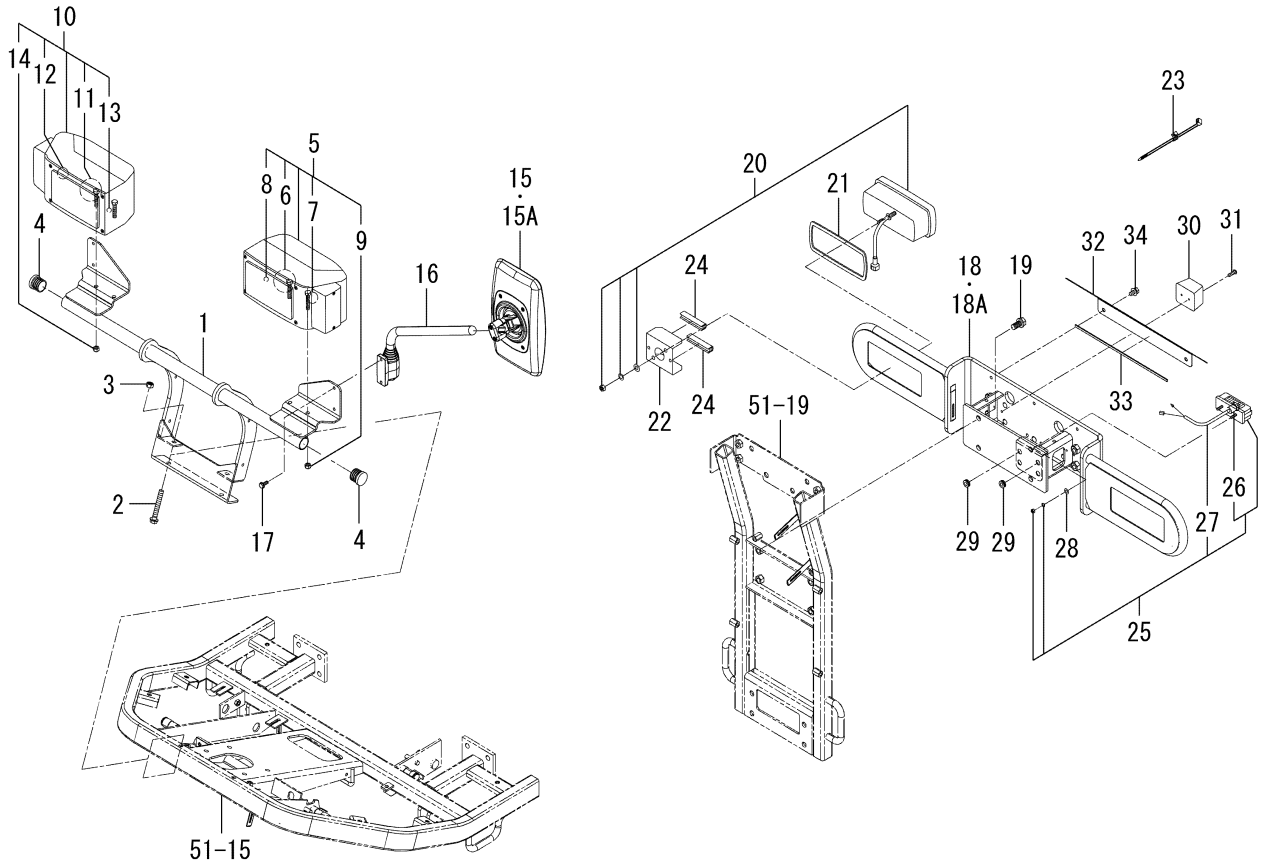


1832-650C-0100

| KEY | PART CODE | DESCRIPTION | SPC | TYPE OF MODEL | | ITC | COL | GRP | REMARKS |
|---|---|---|---|---|---|---|---|---|---|
| | | | | SF225F | SF237F | | | | |
| 29 | 4335-512-004-00 | GROMMET/9 | * | | 2 | | | | |
| 30 | 1809-650-012-00 | STOPPER/B | * | | 2 | | | | |
| 31 | V111-176-002-50 | SCREW/M6X25 | * | | 4 | | | | |
| 32 | 1832-650-061-00 | COVER/REARLIGHT | * | | 1 | | | | |
| 33 | 1786-631-005-00 | INSULATOR/300 | * | | 1 | | | | |
| 34 | V211-360-801-60 | BOLT,SP/M8X16 | * | | 2 | | | | |

# FIG. 78 LIGHT SYSTEM(EXCEPT B TYPE)

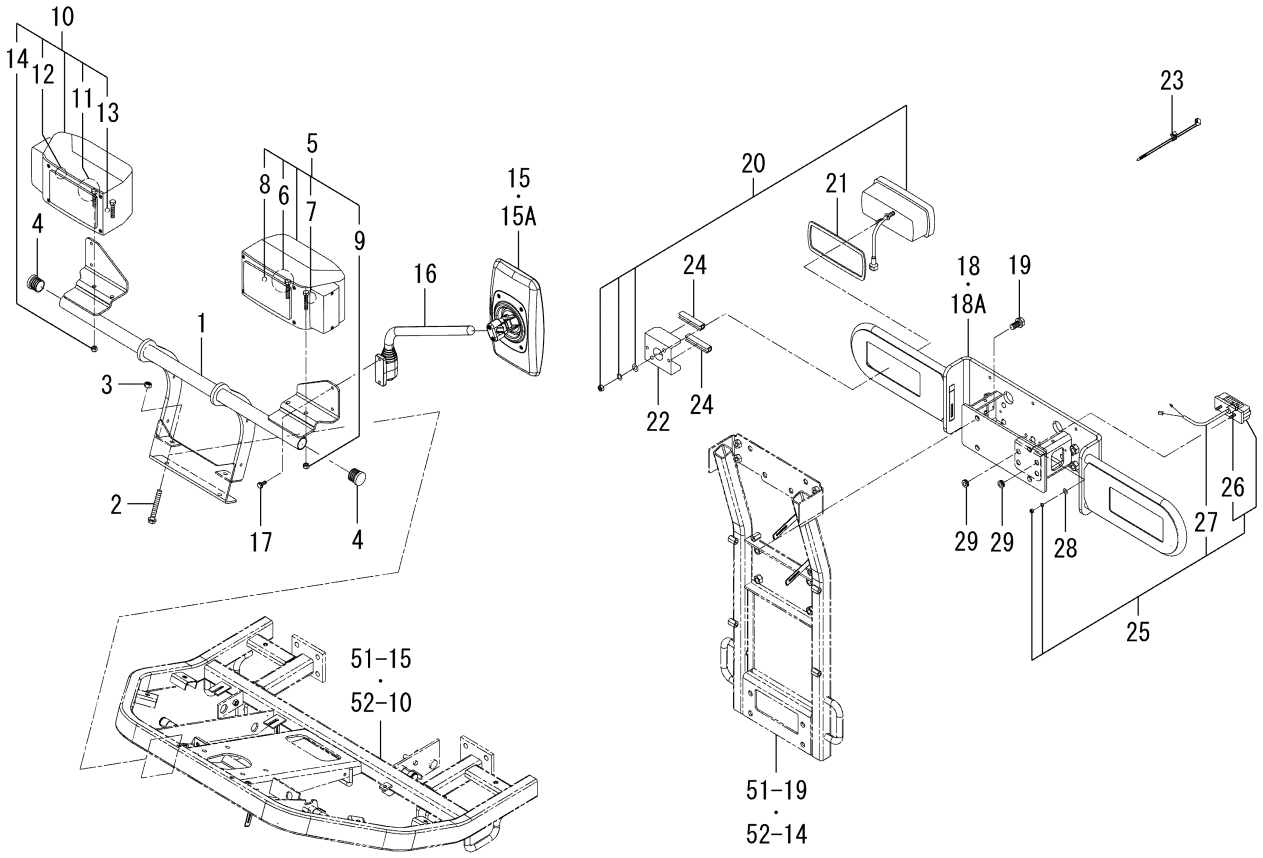


1832-650D-0100

| KEY | PART CODE | DESCRIPTION | SPC | TYPE OF MODEL | | ITC | COL | GRP | REMARKS |
|---|---|---|---|---|---|---|---|---|---|
| | | | | SF225F | SF237F | | | | |
| 1 | 1832-650-210-00 | STAY/LAMP/FRONT COMP | * | 1 | 1 | | | | |
| 2 | V231-361-007-00 | FLANGEBOLT/M10X70 | * | 2 | 2 | | | | |
| 3 | 1725-611-087-00 | U-NUT/M10X1.5 | * | 2 | 2 | | | | |
| 4 | 1809-650-006-00 | CAP/PIPE | * | 2 | 2 | | | | |
| 5 | 1809-650-230-00 | LAMP/HEAD/LH ASSY | * | 1 | 1 | | | | |
| 6 | 1774-650-212-00 | BULB/H4/60/55W | * | 1 | 1 | | | | |
| 7 | 1772-654-216-00 | BULB/12V21W | * | 1 | 1 | | | | |
| 8 | 1809-650-232-00 | BULB/12V4W | * | 1 | 1 | | | | |
| 9 | 1809-650-233-00 | UNUT(M8) | * | 2 | 2 | | | | |
| 10 | 1809-650-240-00 | LAMP/HEAD/RH ASSY | * | 1 | 1 | | | | |
| 11 | 1774-650-212-00 | BULB/H4/60/55W | * | 1 | 1 | | | | |
| 12 | 1772-654-216-00 | BULB/12V21W | * | 1 | 1 | | | | |
| 13 | 1809-650-232-00 | BULB/12V4W | * | 1 | 1 | | | | |
| 14 | 1809-650-233-00 | UNUT(M8) | * | 2 | 2 | | | | |
| 15 | 1739-619-320-00 | MIRROR ASSY | * | 2 -39 | 2 -340 | | | | |
| 15A | 1739-619-320-10 | MIRROR ASSY | * | 2 40- | 2 341- | 1 | | | |
| 16 | 1739-619-310-00 | ARM/MIRROR ASSY | * | 2 | 2 | | | | |
| 17 | V230-360-601-60 | FLANGEBOLT/M6X16 | * | 4 | 4 | | | | |
| 18 | 1832-650-660-10 | BUMPER/REAR COMP | * | 1 -191 | 1 -487 | | | | |
| 18A | 1832-650-660-20 | BUMPER/REAR COMP | * | 1 192- | 1 488- | 1 | | | |
| 19 | 6901-931-225-00 | BOLT,SEMS/M12X25/7T | * | 4 | 4 | | | | |
| 20 | 1772-654-210-00 | LAMP/COMBINATION/REA | * | 2 | 2 | | | | FIG 110 |
| 21 | 1772-654-001-00 | INSULATOR/LAMP | * | 2 | 2 | | | | |
| 22 | 1772-654-002-10 | PLATE/U/70X85 | * | 2 | 2 | | | | |
| 23 | 1560-666-004-00 | BAND | * | 2 | 2 | | | | |
| 24 | P113-201-007-00 | TRIM/70 | * | 4 | 4 | | | | |
| 25 | 1674-654-270-00 | LAMP/NUMBERPLAT SET | * | 1 | 1 | | | | |
| 26 | 1674-654-271-00 | BULB/12V/5W | * | 1 | 1 | | | | |
| 27 | 1674-654-272-00 | HARNESS/LAMP | * | 1 | 1 | | | | |
| 28 | V411-260-006-00 | WASHER,PL/M6 | * | 2 | 2 | | | | |

# FIG. 78 LIGHT SYSTEM(EXCEPT B TYPE)

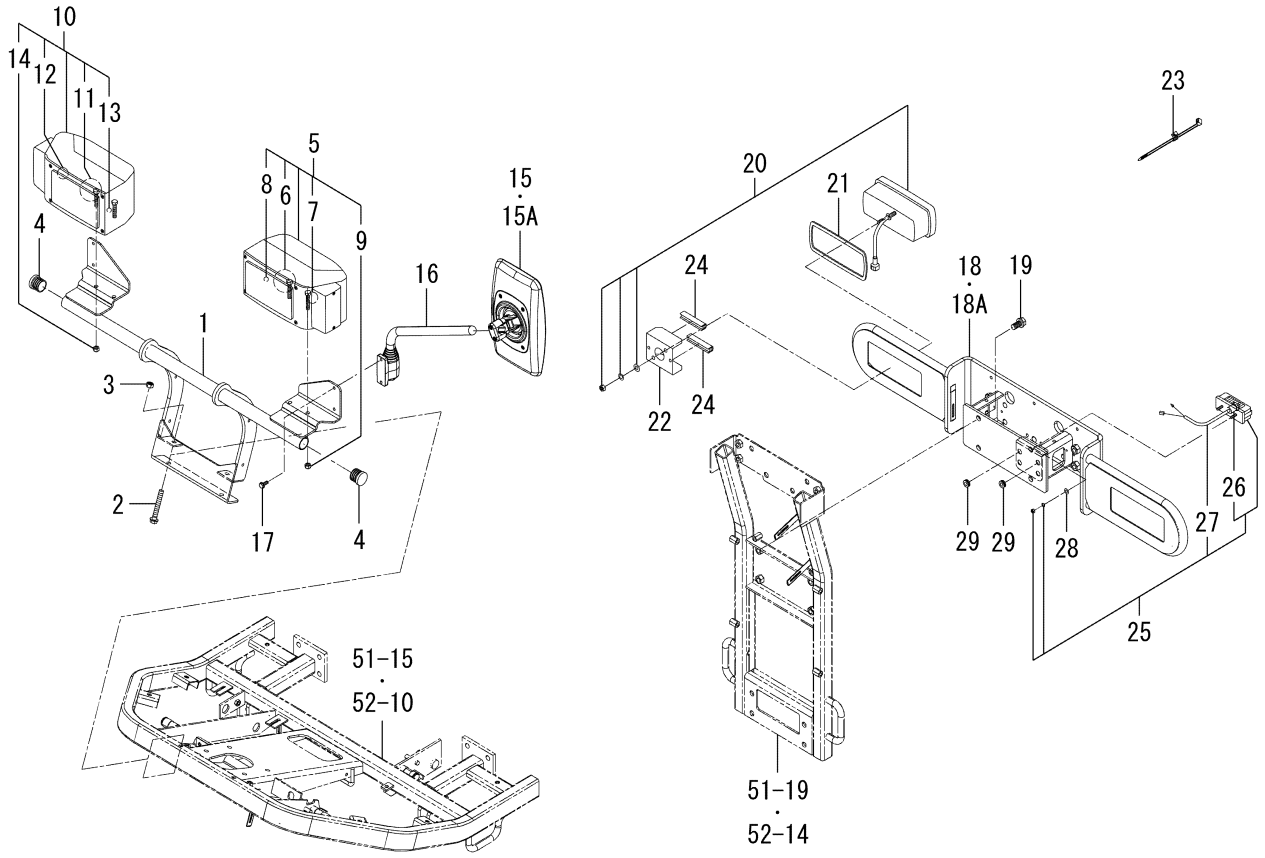


1832-650D-0100

| KEY | PART CODE | DESCRIPTION | SPC | TYPE OF MODEL | | ITC | COL | GRP | REMARKS |
|---|---|---|---|---|---|---|---|---|---|
| | | | | SF225F | SF237F | | | | |
| 29 | 4335-512-004-00 | GROMMET/9 | * | 2 | 2 | | | | |

# FIG. 79 LIGHT SYSTEM(225F-B TYPE)

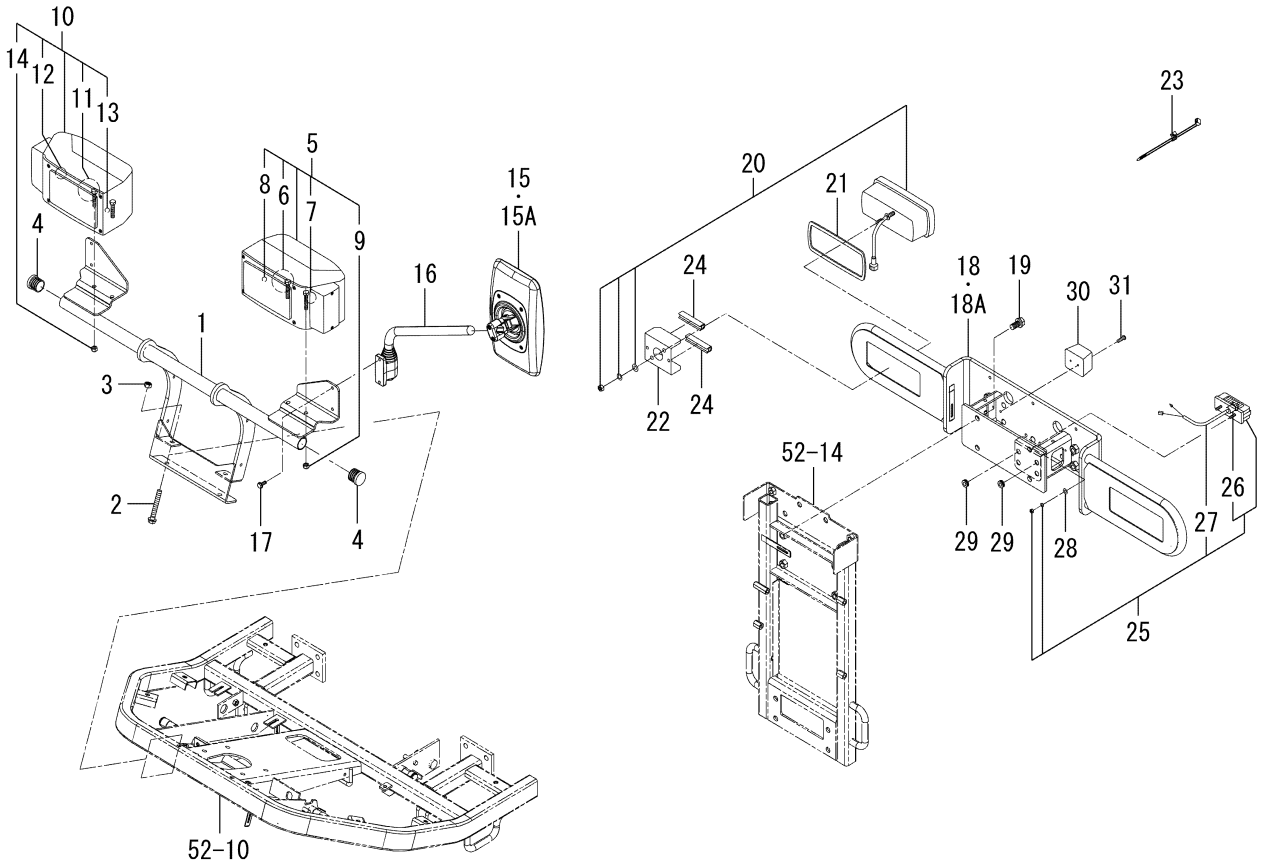


1832-650E-0100

| KEY | PART CODE | DESCRIPTION | SPC | TYPE OF MODEL | | ITC | COL | GRP | REMARKS |
|---|---|---|---|---|---|---|---|---|---|
| | | | | SF225F | SF237F | | | | |
| 1 | 1832-650-210-00 | STAY/LAMP/FRONT COMP | * | 1 | | | | | |
| 2 | V231-361-007-00 | FLANGEBOLT/M10X70 | * | 2 | | | | | |
| 3 | 1725-611-087-00 | U-NUT/M10X1.5 | * | 2 | | | | | |
| 4 | 1809-650-006-00 | CAP/PIPE | * | 2 | | | | | |
| 5 | 1809-650-230-00 | LAMP/HEAD/LH ASSY | * | 1 | | | | | |
| 6 | 1774-650-212-00 | BULB/H4/60/55W | * | 1 | | | | | |
| 7 | 1772-654-216-00 | BULB/12V21W | * | 1 | | | | | |
| 8 | 1809-650-232-00 | BULB/12V4W | * | 1 | | | | | |
| 9 | 1809-650-233-00 | UNUT(M8) | * | 2 | | | | | |
| 10 | 1809-650-240-00 | LAMP/HEAD/RH ASSY | * | 1 | | | | | |
| 11 | 1774-650-212-00 | BULB/H4/60/55W | * | 1 | | | | | |
| 12 | 1772-654-216-00 | BULB/12V21W | * | 1 | | | | | |
| 13 | 1809-650-232-00 | BULB/12V4W | * | 1 | | | | | |
| 14 | 1809-650-233-00 | UNUT(M8) | * | 2 | | | | | |
| 15 | 1739-619-320-00 | MIRROR ASSY | * | 2 -39 | | | | | |
| 15A | 1739-619-320-10 | MIRROR ASSY | * | 2 40- | | 1 | | | |
| 16 | 1739-619-310-00 | ARM/MIRROR ASSY | * | 2 | | | | | |
| 17 | V230-360-601-60 | FLANGEBOLT/M6X16 | * | 4 | | | | | |
| 18 | 1832-650-660-10 | BUMPER/REAR COMP | * | 1 -191 | | | | | |
| 18A | 1832-650-660-20 | BUMPER/REAR COMP | * | 1 192- | | 1 | | | |
| 19 | 6901-931-225-00 | BOLT,SEMS/M12X25/7T | * | 4 | | | | | |
| 20 | 1772-654-210-00 | LAMP/COMBINATION/REA | * | 2 | | | | | FIG 110 |
| 21 | 1772-654-001-00 | INSULATOR/LAMP | * | 2 | | | | | |
| 22 | 1772-654-002-10 | PLATE/U/70X85 | * | 2 | | | | | |
| 23 | 1560-666-004-00 | BAND | * | 2 | | | | | |
| 24 | P113-201-007-00 | TRIM/70 | * | 4 | | | | | |
| 25 | 1674-654-270-00 | LAMP/NUMBERPLAT SET | * | 1 | | | | | |
| 26 | 1674-654-271-00 | BULB/12V/5W | * | 1 | | | | | |
| 27 | 1674-654-272-00 | HARNESS/LAMP | * | 1 | | | | | |
| 28 | V411-260-006-00 | WASHER,PL/M6 | * | 2 | | | | | |

# FIG. 79 LIGHT SYSTEM(225F-B TYPE)

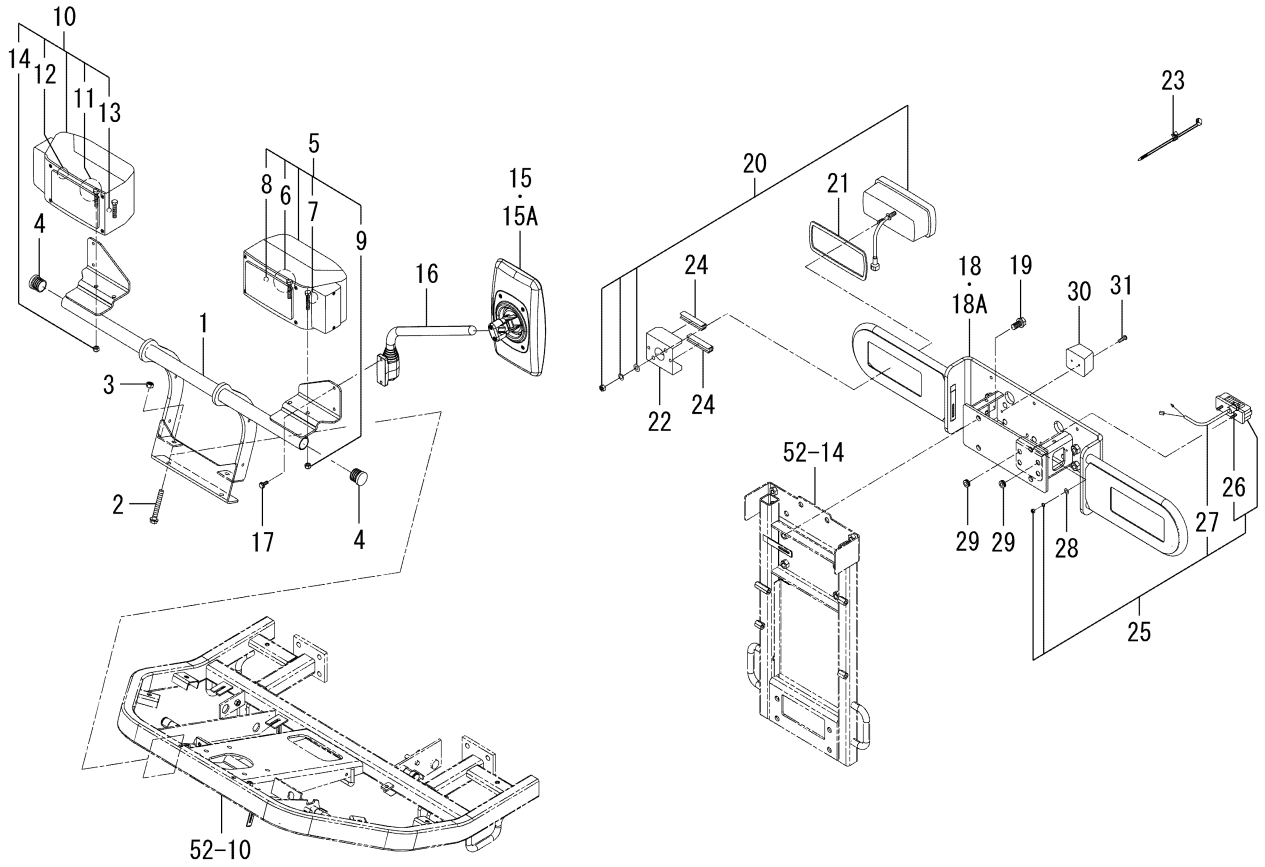


1832-650E-0100

| KEY | PART CODE | DESCRIPTION | SPC | TYPE OF MODEL | | ITC | COL | GRP | REMARKS |
|---|---|---|---|---|---|---|---|---|---|
| | | | | SF225F | SF237F | | | | |
| 29 | 4335-512-004-00 | GROMMET/9 | * | 2 | | | | | |
| 30 | 1809-650-012-00 | STOPPER/B | * | 2 | | | | | |
| 31 | V111-176-002-50 | SCREW/M6X25 | * | 4 | | | | | |

# FIG. 80 PANEL(SWITCH)SYSTEM(237F)

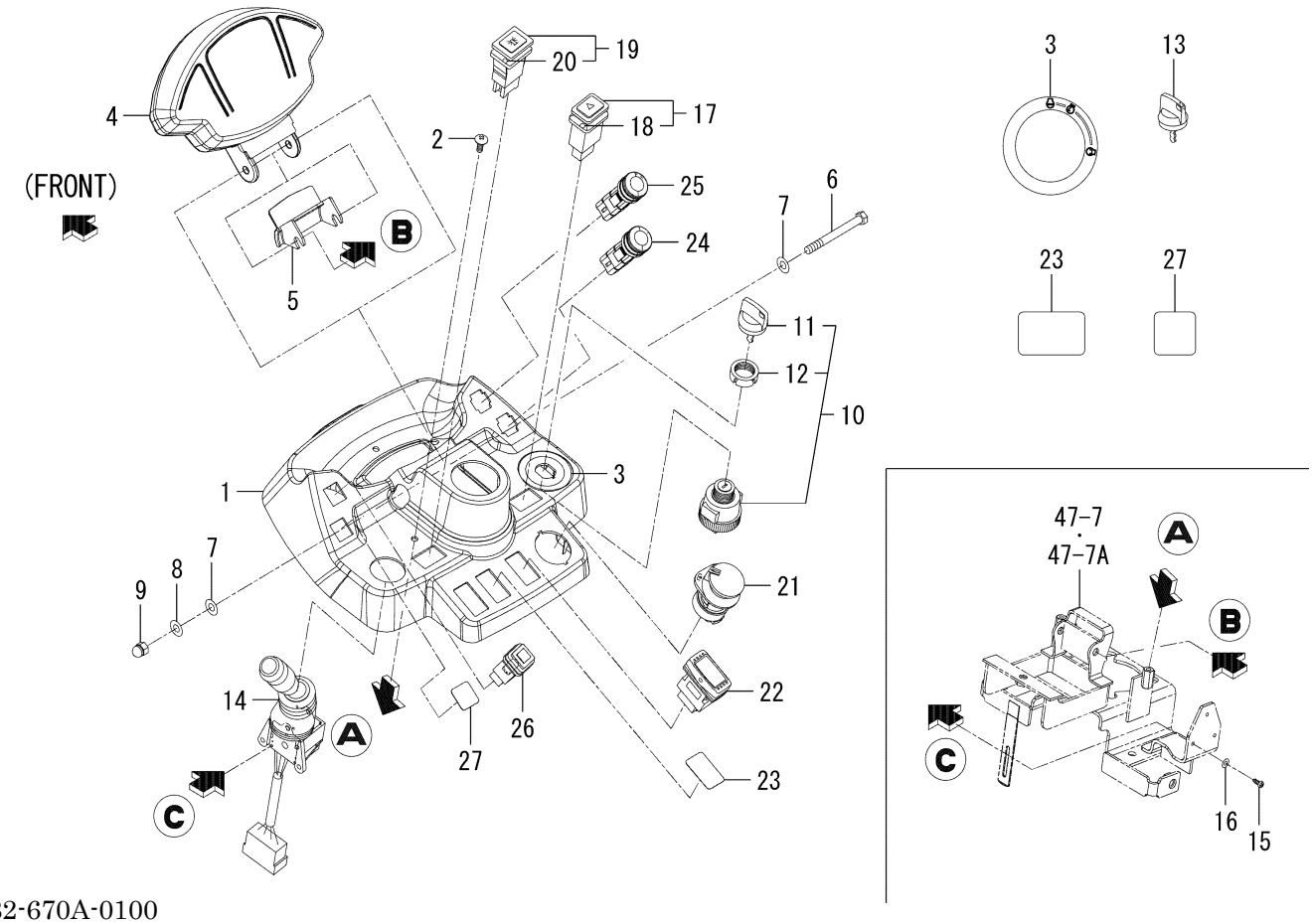


1832-670A-0100

| KEY | PART CODE | DESCRIPTION | SPC | TYPE OF MODEL | | ITC | COL | GRP | REMARKS |
|---|---|---|---|---|---|---|---|---|---|
| | | | | SF225F | SF237F | | | | |
| 1 | 1809-670-061-10 | PANEL/SWITCH | * | | 1 | | | | |
| 2 | 1729-705-009-00 | SCREW/TRUSS/M06X16 | * | | 3 | | | | |
| 3 | 1817-902-032-00 | LABEL/CONTROL/START | * | | 1 | | | | |
| 4 | 1832-670-610-00 | PANEL/MONITOR ASSY | * | | 1 | | | | |
| 5 | 1809-670-062-00 | COVER/MONITOR | * | | 1 | | | | |
| 6 | V201-260-808-00 | BOLT/M8X80 | * | | 1 | | | | |
| 7 | V411-260-008-00 | WASHER,PL/M8 | * | | 2 | | | | |
| 8 | V401-160-008-00 | WASHER,SP/M8 | * | | 1 | | | | |
| 9 | 2232-536-008-00 | UNUT/M8/CAP | * | | 1 | | | | |
| 10 | 3843-261-200-20 | SWITCH/MAIN ASSY | * | | 1 | | | | |
| 11 | 3843-261-201-00 | KEY | * | | 1 | | | | |
| 12 | 2186-536-212-00 | NUT/RING | * | | 1 | | | | |
| 13 | 3843-261-201-00 | KEY | * | | 1 | | | | |
| 14 | 1774-680-260-00 | SWITCH/COMBINATION | * | | 1 | | | | |
| 15 | 1772-652-001-00 | SCREW/TAPPING/3.5X13 | * | | 3 | | | | |
| 16 | V411-260-004-00 | WASHER,PL/M4 | * | | 3 | | | | |
| 17 | 1740-680-550-00 | SWITCH/HAZARD ASSY | * | | 1 | | | | 1255- |
| 18 | 1740-680-551-00 | BULB/LAMP/14V60MA | * | | 1 | | | | |
| 19 | 1809-670-290-00 | SWITCH/BEACON ASSY | * | | 1 | | | | |
| 20 | 1740-680-551-00 | BULB/LAMP/14V60MA | * | | 1 | | | | |
| 21 | 1837-652-600-00 | SWITCH/PTO ASSY | * | | 1 | | | | |
| 22 | 1832-670-320-00 | SWITCH/PTO ASSY | * | | 1 | | | | |
| 23 | 1832-670-202-00 | LABEL/PANEL | * | | 2 | | | | |
| 24 | 1848-652-230-00 | SWITCH/DPF ASSY | * | | 1 | | | | |
| 25 | 1848-652-240-00 | SWITCH/DPF/STOP ASSY | * | | 1 | | | | |
| 26 | 1809-670-620-00 | SWITCH/ECO ASSY | * | | 1 | | | | |
| 27 | 1832-670-061-00 | LABEL/SWITCH | * | | 1 | | | | |
| | | | | | | | | | |
| | | | | | | | | | |
| | | | | | | | | | |

# FIG. 81 PANEL(SWITCH)SYSTEM(225F)

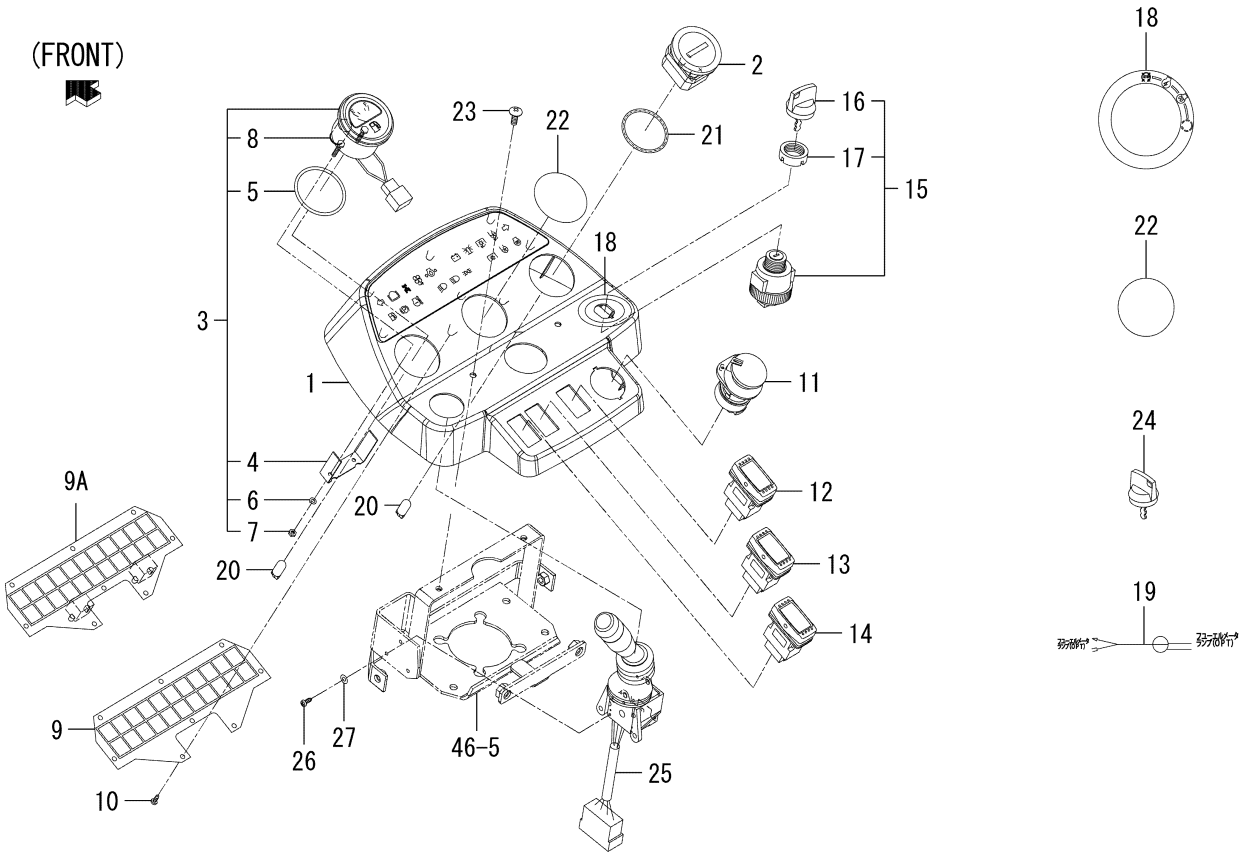


1832-670B-0100

| KEY | PART CODE | DESCRIPTION | SPC | TYPE OF MODEL | | ITC | COL | GRP | REMARKS |
|---|---|---|---|---|---|---|---|---|---|
| | | | | SF225F | SF237F | | | | |
| 1 | 1832-670-810-00 | PANEL/SWITCH COMP | * | 1 | | | | | |
| 2 | 1689-613-260-00 | METER/HOUR ASSY | * | 1 | | | | | |
| 3 | 1703-670-320-00 | METER/FUEL ASSY | * | 1 | | | | | |
| 4 | 1703-670-322-00 | HOLDER | * | 1 | | | | | |
| 5 | 1703-670-323-00 | INSULATOR | * | 1 | | | | | |
| 6 | 1703-670-324-00 | WASHER | * | 2 | | | | | |
| 7 | 1703-670-325-00 | NUT | * | 2 | | | | | |
| 8 | 1703-670-326-00 | PLUG | * | 1 | | | | | |
| 9 | 1809-670-220-00 | LAMP/MONITOR ASSY | * | 1 -932 | | | | | |
| 9A | 1809-670-220-10 | LAMP/MONITOR ASSY | * | 1 933- | | 1 | | | |
| 10 | V195-164-008-30 | SCREW/TAPPING | * | 8 | | | | | |
| 11 | 1837-652-600-00 | SWITCH/PTO ASSY | * | 1 | | | | | |
| 12 | 1832-670-320-00 | SWITCH/PTO ASSY | * | 1 | | | | | |
| 13 | 1832-670-330-00 | SWITCH/BEACON ASSY | * | 1 | | | | | |
| 14 | 1832-670-340-00 | SWITCH/HAZARD ASSY | * | 1 | | | | | |
| 15 | 3843-261-200-20 | SWITCH/MAIN ASSY | * | 1 | | | | | |
| 16 | 3843-261-201-00 | KEY | * | 1 | | | | | |
| 17 | 2186-536-212-00 | NUT/RING | * | 1 | | | | | |
| 18 | 1746-902-004-00 | LABEL/CONTROL/START/ | * | 1 | | | | | |
| 19 | 1770-621-530-00 | HARNESS/LAMP ASSY | * | 1 | | | | | |
| 20 | 3650-270-214-00 | BULB/12V3.4W | * | 2 | | | | | |
| 21 | V723-102-005-00 | O-RING/1A,S50 | * | 1 | | | | | |
| 22 | 1832-670-201-00 | LABEL/METER | * | 1 | | | | | |
| 23 | 1729-705-009-00 | SCREW/TRUSS/M06X16 | * | 2 | | | | | |
| 24 | 3843-261-201-00 | KEY | * | 1 | | | | | |
| 25 | 1774-680-260-00 | SWITCH/COMBINATION | * | 1 | | | | | |
| 26 | 1772-652-001-00 | SCREW/TAPPING/3.5X13 | * | 3 | | | | | |
| 27 | V411-260-004-00 | WASHER,PL/M4 | * | 3 911- | | | | | |
| | | | | | | | | | |
| | | | | | | | | | |

# FIG. 82 SWITCH SYSTEM(237F-B TYPE)(1/2)

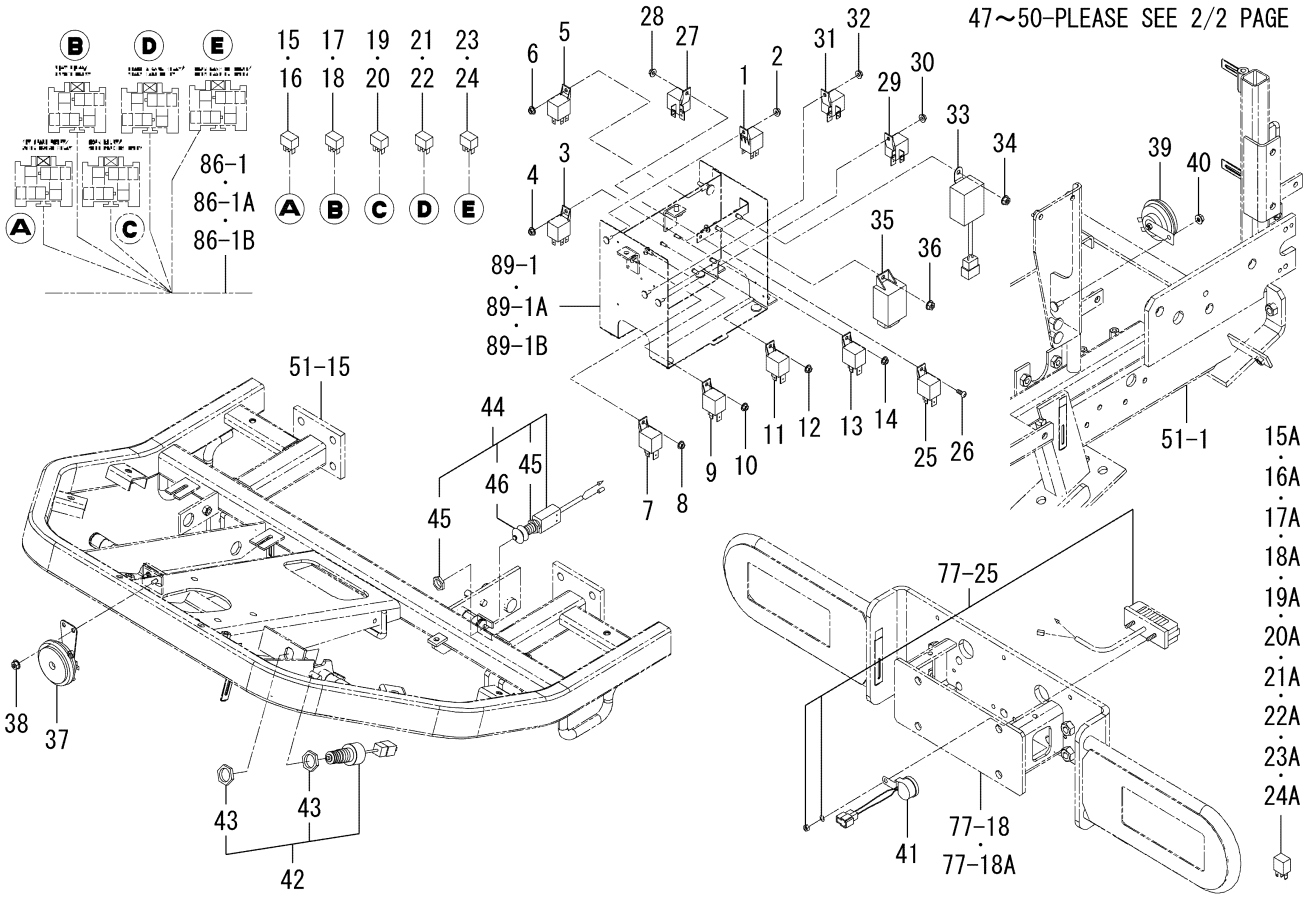


1832-680C-0100

| KEY | PART CODE | DESCRIPTION | SPC | TYPE OF MODEL | | ITC | COL | GRP | REMARKS |
|---|---|---|---|---|---|---|---|---|---|
| | | | | SF225F | SF237F | | | | |
| 1 | 1725-681-200-00 | RELAY/35A ASSY | * | | 1 | | | | |
| 2 | V360-260-005-00 | NUT/WASHER/M5 | * | | 1 | | | | |
| 3 | 1725-681-200-00 | RELAY/35A ASSY | * | | 1 | | | | |
| 4 | V360-260-005-00 | NUT/WASHER/M5 | * | | 1 | | | | |
| 5 | 1725-681-200-00 | RELAY/35A ASSY | * | | 1 | | | | |
| 6 | V360-260-005-00 | NUT/WASHER/M5 | * | | 1 | | | | |
| 7 | 1719-650-250-00 | RELAY ASSY | * | | 1 | | | | |
| 8 | V360-260-005-00 | NUT/WASHER/M5 | * | | 1 | | | | |
| 9 | 1719-650-250-00 | RELAY ASSY | * | | 1 | | | | |
| 10 | V360-260-005-00 | NUT/WASHER/M5 | * | | 1 | | | | |
| 11 | 1719-650-250-00 | RELAY ASSY | * | | 1 | | | | |
| 12 | V360-260-005-00 | NUT/WASHER/M5 | * | | 1 | | | | |
| 13 | 1719-650-250-00 | RELAY ASSY | * | | 1 | | | | |
| 14 | V360-260-005-00 | NUT/WASHER/M5 | * | | 1 | | | | |
| 15 | 1800-652-400-00 | RELAY/5P ASSY | * | | 1-907 | | | | |
| 15A | 1789-695-330-00 | RELAY/CM/1C ASSY | * | | 1908- | | | | |
| 16 | 1800-652-400-00 | RELAY/5P ASSY | * | | 1-907 | | | | |
| 16A | 1789-695-330-00 | RELAY/CM/1C ASSY | * | | 1908- | | | | |
| 17 | 1800-652-400-00 | RELAY/5P ASSY | * | | 1-907 | | | | |
| 17A | 1789-695-330-00 | RELAY/CM/1C ASSY | * | | 1908- | | | | |
| 18 | 1800-652-400-00 | RELAY/5P ASSY | * | | 1-907 | | | | |
| 18A | 1789-695-330-00 | RELAY/CM/1C ASSY | * | | 1908- | | | | |
| 19 | 1800-652-400-00 | RELAY/5P ASSY | * | | 1-907 | | | | |
| 19A | 1789-695-330-00 | RELAY/CM/1C ASSY | * | | 1908- | | | | |
| 20 | 1800-652-400-00 | RELAY/5P ASSY | * | | 1-907 | | | | |
| 20A | 1789-695-330-00 | RELAY/CM/1C ASSY | * | | 1908- | | | | |
| 21 | 1800-652-400-00 | RELAY/5P ASSY | * | | 1-907 | | | | |
| 21A | 1789-695-330-00 | RELAY/CM/1C ASSY | * | | 1908- | | | | |
| 22 | 1800-652-400-00 | RELAY/5P ASSY | * | | 1-907 | | | | |
| 22A | 1789-695-330-00 | RELAY/CM/1C ASSY | * | | 1908- | | | | |

# FIG. 82 SWITCH SYSTEM(237F-B TYPE)(1/2)

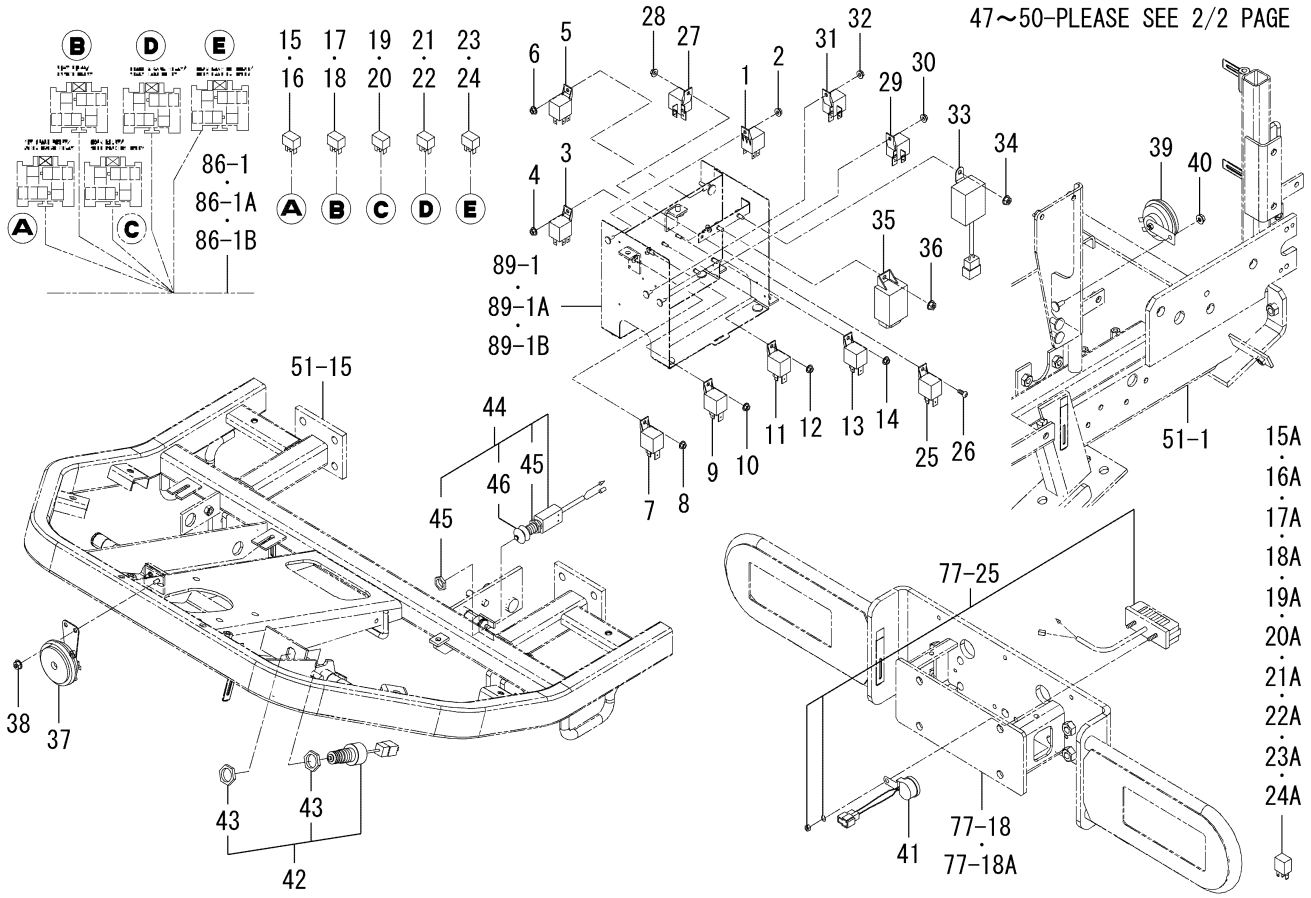


1832-680C-0100

| KEY | PART CODE | DESCRIPTION | SPC | TYPE OF MODEL | | ITC | COL | GRP | REMARKS |
|---|---|---|---|---|---|---|---|---|---|
| | | | | SF225F | SF237F | | | | |
| 23 | 1800-652-400-00 | RELAY/5P ASSY | * | | 1 -907 | | | | |
| 23A | 1789-695-330-00 | RELAY/CM/1C ASSY | * | | 1 908- | | | | |
| 24 | 1800-652-400-00 | RELAY/5P ASSY | * | | 1 -907 | | | | |
| 24A | 1789-695-330-00 | RELAY/CM/1C ASSY | * | | 1 908- | | | | |
| 25 | 8671-657-003-00 | RELAY/5P ASSY | * | | 1 | | | | |
| 26 | V111-165-001-20 | SCREW/M5X12 | * | | 1 | | | | |
| 27 | 8671-657-003-00 | RELAY/5P ASSY | * | | 1 | | | | |
| 28 | V360-260-005-00 | NUT/WASHER/M5 | * | | 1 | | | | |
| 29 | 8671-657-003-00 | RELAY/5P ASSY | * | | 1 | | | | |
| 30 | V360-260-005-00 | NUT/WASHER/M5 | * | | 1 | | | | |
| 31 | 8671-657-003-00 | RELAY/5P ASSY | * | | 1 | | | | |
| 32 | V360-260-005-00 | NUT/WASHER/M5 | * | | 1 | | | | |
| 33 | 1774-680-250-00 | UNIT/TIMER ASSY | * | | 1 | | | | |
| 34 | V360-260-006-00 | NUT/WASHER/M6 | * | | 1 | | | | |
| 35 | 1739-681-220-20 | RELAY/FLASHER/EEC | * | | 1 | | | | |
| 36 | V360-260-006-00 | NUT/WASHER/M6 | * | | 1 | | | | |
| 37 | 1740-680-530-20 | HORN ASSY | * | | 1 | | | | |
| 38 | V360-260-006-00 | NUT/WASHER/M6 | * | | 2 | | | | |
| 39 | 1690-650-320-00 | HORN ASSY | * | | 1 | | | | |
| 40 | V360-260-006-00 | NUT/WASHER/M6 | * | | 1 | | | | |
| 41 | 2515-665-210-00 | BUZZER | * | | 1 | | | | |
| 42 | 1772-654-250-10 | SWITCH/PUSH ASSY | * | | 1 | | | | |
| 43 | 1772-654-251-00 | NUT | * | | 2 | | | | |
| 44 | 1772-654-280-10 | SWITCH/PUSH ASSY | * | | 1 | | | | |
| 45 | 1772-654-281-00 | NUT | * | | 2 | | | | |
| 46 | 1772-654-282-00 | BOOT | * | | 1 | | | | |
| 47 | 3829-282-610-00 | SENSOR/STRAW/L/165 | * | | 1 | | | | |
| 48 | V210-360-601-60 | BOLT,SP/M6X16 | * | | 1 | | | | |
| 49 | 1832-680-230-00 | STAY/SWITCH/HST COMP | * | | 2 | | | | |
| 50 | 1716-680-330-10 | SWITCH/LEVER ASSY | * | | 2 | | | | |

# FIG. 82 SWITCH SYSTEM(237F-B TYPE)(2/2)

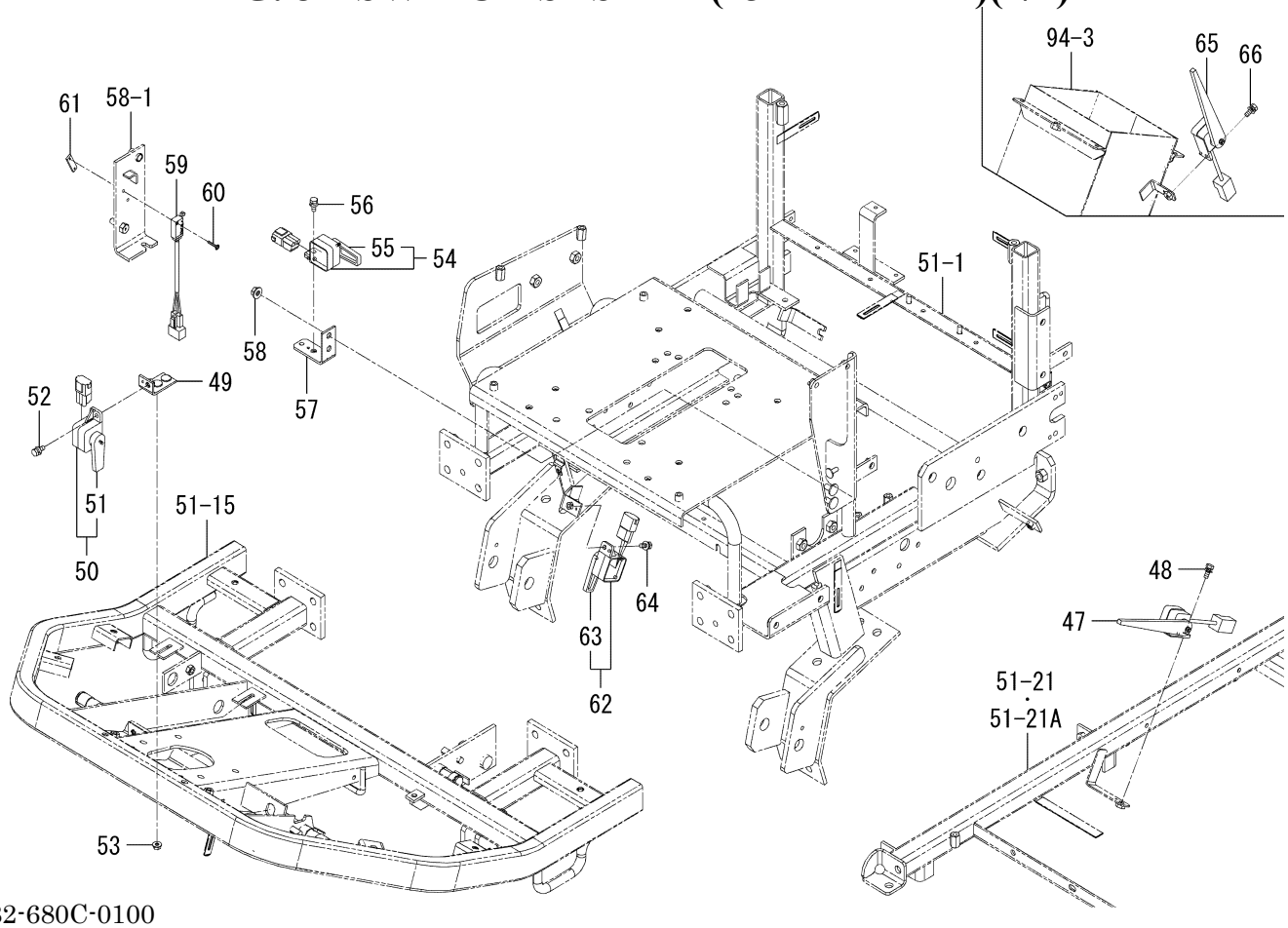


1832-680C-0100

| KEY | PART CODE | DESCRIPTION | SPC | TYPE OF MODEL | | ITC | COL | GRP | REMARKS |
|---|---|---|---|---|---|---|---|---|---|
| | | | | SF225F | SF237F | | | | |
| 51 | 1716-680-222-00 | ARM | * | | 2 | | | | |
| 52 | V210-360-601-60 | BOLT,SP/M6X16 | * | | 2 | | | | |
| 53 | V360-260-006-00 | NUT/WASHER/M6 | * | | 4 | | | | |
| 54 | 1716-680-330-10 | SWITCH/LEVER ASSY | * | | 1 | | | | |
| 55 | 1716-680-222-00 | ARM | * | | 1 | | | | |
| 56 | V210-360-601-60 | BOLT,SP/M6X16 | * | | 1 | | | | |
| 57 | 1809-801-280-00 | PLATE/SWITCH COMP | * | | 1 | | | | |
| 58 | V362-260-008-00 | NUT/WASHER/M8 | * | | 2 | | | | |
| 59 | 1725-680-220-10 | SWITCH/LIMIT ASSY | * | | 1 | | | | |
| 60 | 1614-129-003-00 | SCREW/M03X20 | * | | 2 | | | | |
| 61 | 3642-496-007-10 | PLATE,SWITCH | * | | 1 | | | | |
| 62 | 1716-680-330-10 | SWITCH/LEVER ASSY | * | | 1 | | | | |
| 63 | 1716-680-222-00 | ARM | * | | 1 | | | | |
| 64 | V210-360-601-60 | BOLT,SP/M6X16 | * | | 1 | | | | |
| 65 | 3829-282-610-00 | SENSOR/STRAW/L/165 | * | | 1 | | | | |
| 66 | V210-360-601-60 | BOLT,SP/M6X16 | * | | 1 | | | | |

# FIG. 83 SWITCH SYSTEM(237F EXCEPT B)(1/2)

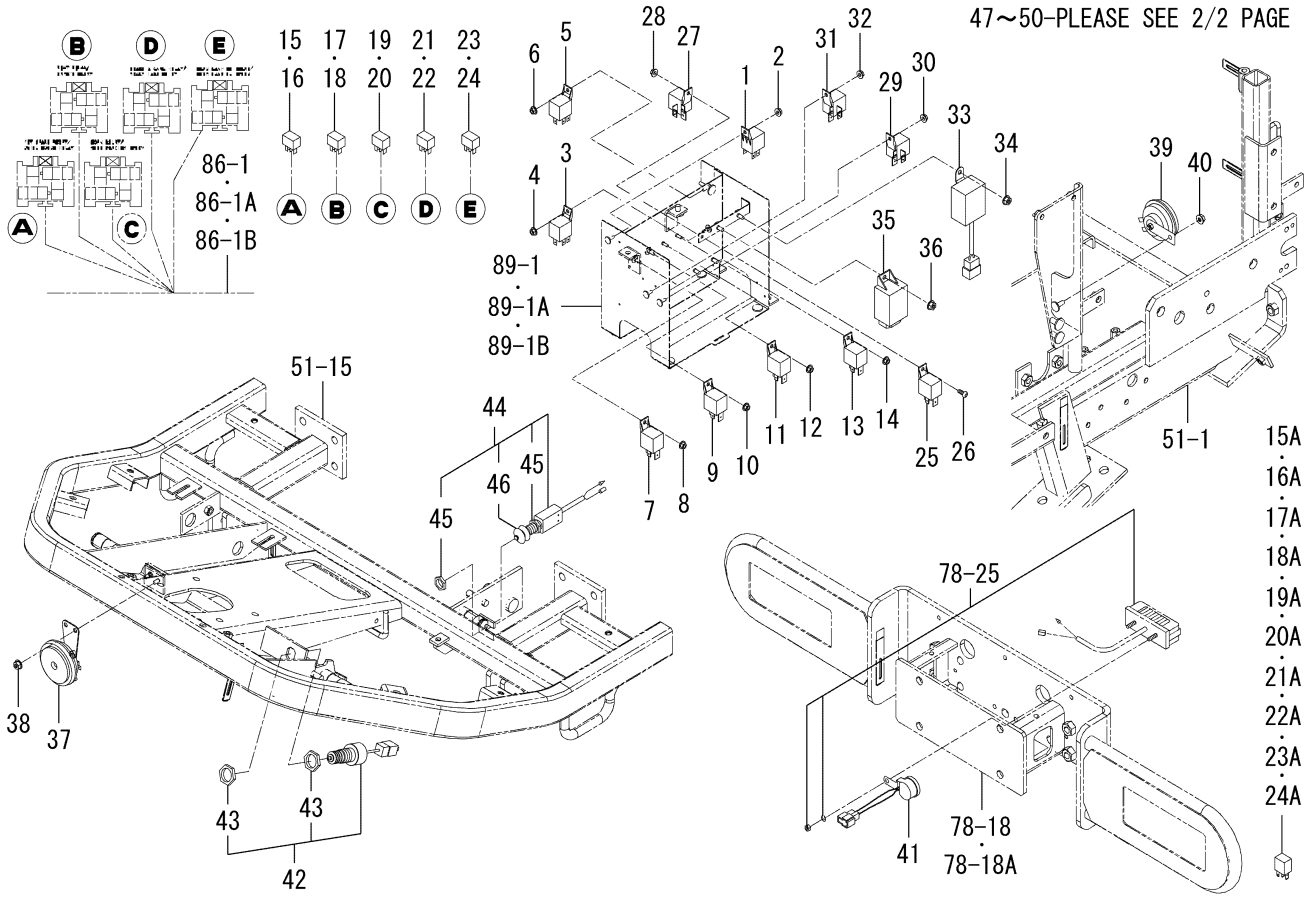


1832-680D-0100

| KEY | PART CODE | DESCRIPTION | SPC | TYPE OF MODEL | | ITC | COL | GRP | REMARKS |
|---|---|---|---|---|---|---|---|---|---|
| | | | | SF225F | SF237F | | | | |
| 1 | 1725-681-200-00 | RELAY/35A ASSY | * | | 1 | | | | |
| 2 | V360-260-005-00 | NUT/WASHER/M5 | * | | 1 | | | | |
| 3 | 1725-681-200-00 | RELAY/35A ASSY | * | | 1 | | | | |
| 4 | V360-260-005-00 | NUT/WASHER/M5 | * | | 1 | | | | |
| 5 | 1725-681-200-00 | RELAY/35A ASSY | * | | 1 | | | | |
| 6 | V360-260-005-00 | NUT/WASHER/M5 | * | | 1 | | | | |
| 7 | 1719-650-250-00 | RELAY ASSY | * | | 1 | | | | |
| 8 | V360-260-005-00 | NUT/WASHER/M5 | * | | 1 | | | | |
| 9 | 1719-650-250-00 | RELAY ASSY | * | | 1 | | | | |
| 10 | V360-260-005-00 | NUT/WASHER/M5 | * | | 1 | | | | |
| 11 | 1719-650-250-00 | RELAY ASSY | * | | 1 | | | | |
| 12 | V360-260-005-00 | NUT/WASHER/M5 | * | | 1 | | | | |
| 13 | 1719-650-250-00 | RELAY ASSY | * | | 1 | | | | |
| 14 | V360-260-005-00 | NUT/WASHER/M5 | * | | 1 | | | | |
| 15 | 1800-652-400-00 | RELAY/5P ASSY | * | | 1 -911 | | | | |
| 15A | 1789-695-330-00 | RELAY/CM/1C ASSY | * | | 1 912- | | | | |
| 16 | 1800-652-400-00 | RELAY/5P ASSY | * | | 1 -911 | | | | |
| 16A | 1789-695-330-00 | RELAY/CM/1C ASSY | * | | 1 912- | | | | |
| 17 | 1800-652-400-00 | RELAY/5P ASSY | * | | 1 -911 | | | | |
| 17A | 1789-695-330-00 | RELAY/CM/1C ASSY | * | | 1 912- | | | | |
| 18 | 1800-652-400-00 | RELAY/5P ASSY | * | | 1 -911 | | | | |
| 18A | 1789-695-330-00 | RELAY/CM/1C ASSY | * | | 1 912- | | | | |
| 19 | 1800-652-400-00 | RELAY/5P ASSY | * | | 1 -911 | | | | |
| 19A | 1789-695-330-00 | RELAY/CM/1C ASSY | * | | 1 912- | | | | |
| 20 | 1800-652-400-00 | RELAY/5P ASSY | * | | 1 -911 | | | | |
| 20A | 1789-695-330-00 | RELAY/CM/1C ASSY | * | | 1 912- | | | | |
| 21 | 1800-652-400-00 | RELAY/5P ASSY | * | | 1 -911 | | | | |
| 21A | 1789-695-330-00 | RELAY/CM/1C ASSY | * | | 1 912- | | | | |
| 22 | 1800-652-400-00 | RELAY/5P ASSY | * | | 1 -911 | | | | |
| 22A | 1789-695-330-00 | RELAY/CM/1C ASSY | * | | 1 912- | | | | |

# FIG. 83 SWITCH SYSTEM(237F EXCEPT B)(1/2)

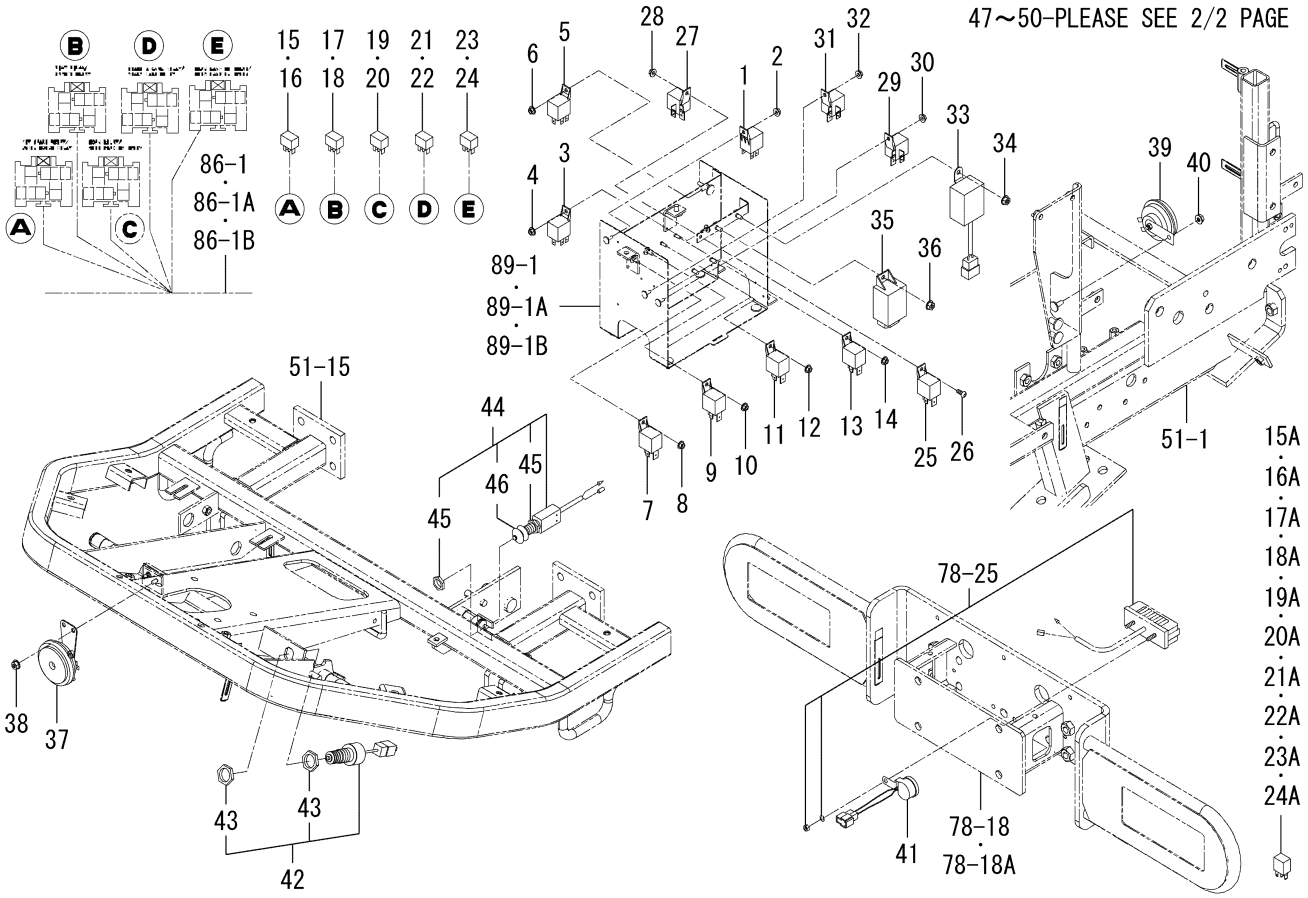


1832-680D-0100

| KEY | PART CODE | DESCRIPTION | SPC | TYPE OF MODEL | | ITC | COL | GRP | REMARKS |
|---|---|---|---|---|---|---|---|---|---|
| | | | | SF225F | SF237F | | | | |
| 23 | 1800-652-400-00 | RELAY/5P ASSY | * | | 1 -911 | | | | |
| 23A | 1789-695-330-00 | RELAY/CM/1C ASSY | * | | 1 912- | | | | |
| 24 | 1800-652-400-00 | RELAY/5P ASSY | * | | 1 -911 | | | | |
| 24A | 1789-695-330-00 | RELAY/CM/1C ASSY | * | | 1 912- | | | | |
| 25 | 8671-657-003-00 | RELAY/5P ASSY | * | | 1 | | | | |
| 26 | V111-165-001-20 | SCREW/M5X12 | * | | 1 | | | | |
| 27 | 8671-657-003-00 | RELAY/5P ASSY | * | | 1 | | | | |
| 28 | V360-260-005-00 | NUT/WASHER/M5 | * | | 1 | | | | |
| 29 | 8671-657-003-00 | RELAY/5P ASSY | * | | 1 | | | | |
| 30 | V360-260-005-00 | NUT/WASHER/M5 | * | | 1 | | | | |
| 31 | 8671-657-003-00 | RELAY/5P ASSY | * | | 1 | | | | |
| 32 | V360-260-005-00 | NUT/WASHER/M5 | * | | 1 | | | | |
| 33 | 1774-680-250-00 | UNIT/TIMER ASSY | * | | 1 | | | | |
| 34 | V360-260-006-00 | NUT/WASHER/M6 | * | | 1 | | | | |
| 35 | 1739-681-220-20 | RELAY/FLASHER/EEC | * | | 1 | | | | |
| 36 | V360-260-006-00 | NUT/WASHER/M6 | * | | 1 | | | | |
| 37 | 1740-680-530-20 | HORN ASSY | * | | 1 | | | | |
| 38 | V360-260-006-00 | NUT/WASHER/M6 | * | | 2 | | | | |
| 39 | 1690-650-320-00 | HORN ASSY | * | | 1 | | | | |
| 40 | V360-260-006-00 | NUT/WASHER/M6 | * | | 1 | | | | |
| 41 | 2515-665-210-00 | BUZZER | * | | 1 | | | | |
| 42 | 1772-654-250-10 | SWITCH/PUSH ASSY | * | | 1 | | | | |
| 43 | 1772-654-251-00 | NUT | * | | 2 | | | | |
| 44 | 1772-654-280-10 | SWITCH/PUSH ASSY | * | | 1 | | | | |
| 45 | 1772-654-281-00 | NUT | * | | 2 | | | | |
| 46 | 1772-654-282-00 | BOOT | * | | 1 | | | | |
| 47 | 3829-282-610-00 | SENSOR/STRAW/L/165 | * | | 1 | | | | |
| 48 | V210-360-601-60 | BOLT,SP/M6X16 | * | | 1 | | | | |
| 49 | 1832-680-230-00 | STAY/SWITCH/HST COMP | * | | 2 | | | | |
| 50 | 1716-680-330-10 | SWITCH/LEVER ASSY | * | | 2 | | | | |

# FIG. 83 SWITCH SYSTEM(237F EXCEPT B)(2/2)

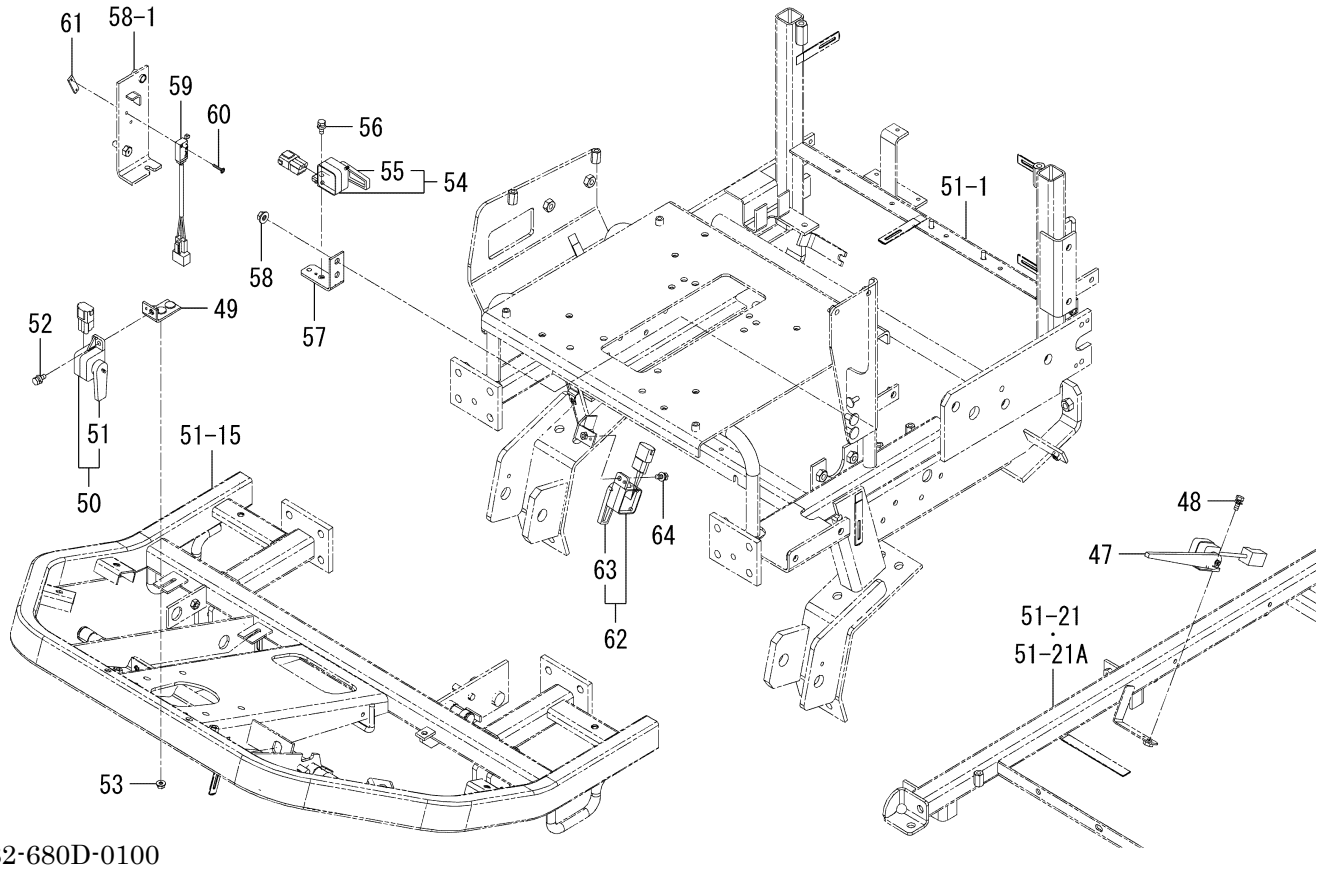


1832-680D-0100

| KEY | PART CODE | DESCRIPTION | SPC | TYPE OF MODEL | | ITC | COL | GRP | REMARKS |
|---|---|---|---|---|---|---|---|---|---|
| | | | | SF225F | SF237F | | | | |
| 51 | 1716-680-222-00 | ARM | * | | 2 | | | | |
| 52 | V210-360-601-60 | BOLT,SP/M6X16 | * | | 2 | | | | |
| 53 | V360-260-006-00 | NUT/WASHER/M6 | * | | 4 | | | | |
| 54 | 1716-680-330-10 | SWITCH/LEVER ASSY | * | | 1 | | | | |
| 55 | 1716-680-222-00 | ARM | * | | 1 | | | | |
| 56 | V210-360-601-60 | BOLT,SP/M6X16 | * | | 1 | | | | |
| 57 | 1809-801-280-00 | PLATE/SWITCH COMP | * | | 1 | | | | |
| 58 | V362-260-008-00 | NUT/WASHER/M8 | * | | 2 | | | | |
| 59 | 1725-680-220-10 | SWITCH/LIMIT ASSY | * | | 1 | | | | |
| 60 | 1614-129-003-00 | SCREW/M03X20 | * | | 2 | | | | |
| 61 | 3642-496-007-10 | PLATE,SWITCH | * | | 1 | | | | |
| 62 | 1716-680-330-10 | SWITCH/LEVER ASSY | * | | 1 | | | | |
| 63 | 1716-680-222-00 | ARM | * | | 1 | | | | |
| 64 | V210-360-601-60 | BOLT,SP/M6X16 | * | | 1 | | | | |

# FIG. 84 SWITCH SYSTEM(225F-B TYPE)(1/2)

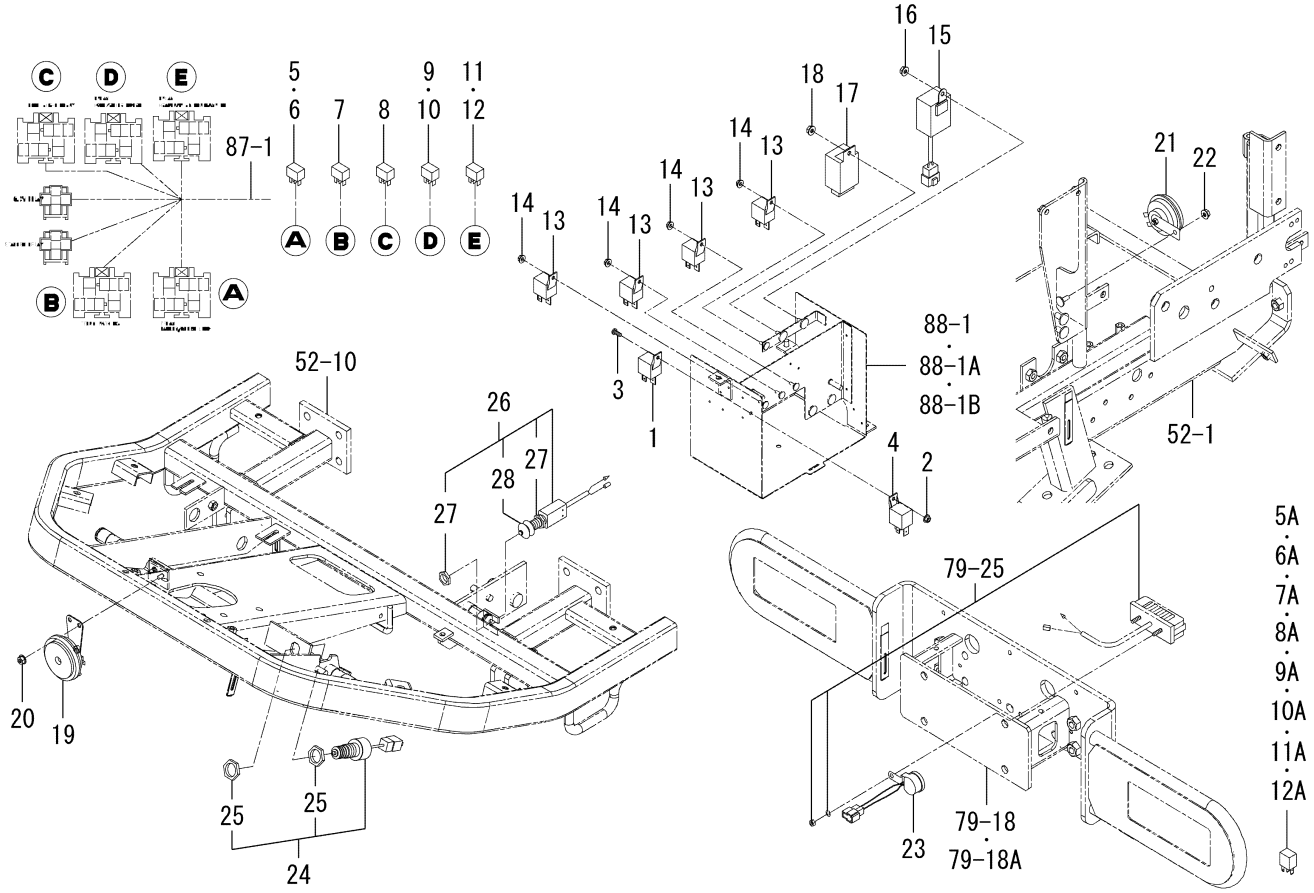


1832-680E-0100

| KEY | PART CODE | DESCRIPTION | SPC | TYPE OF MODEL | | ITC | COL | GRP | REMARKS |
|---|---|---|---|---|---|---|---|---|---|
| | | | | SF225F | SF237F | | | | |
| 1 | 1719-650-250-00 | RELAY ASSY | * | 1 | | | | | |
| 2 | V360-260-005-00 | NUT/WASHER/M5 | * | 1 | | | | | |
| 3 | V111-165-001-20 | SCREW/M5X12 | * | 1 | | | | | |
| 4 | 1719-650-250-00 | RELAY ASSY | * | 1 | | | | | |
| 5 | 1800-652-400-00 | RELAY/5P ASSY | * | 1 -604 | | | | | |
| 5A | 1789-695-330-00 | RELAY/CM/1C ASSY | * | 1 605- | | | | | |
| 6 | 1800-652-400-00 | RELAY/5P ASSY | * | 1 -604 | | | | | |
| 6A | 1789-695-330-00 | RELAY/CM/1C ASSY | * | 1 605- | | | | | |
| 7 | 1800-652-400-00 | RELAY/5P ASSY | * | 1 -604 | | | | | |
| 7A | 1789-695-330-00 | RELAY/CM/1C ASSY | * | 1 605- | | | | | |
| 8 | 1800-652-400-00 | RELAY/5P ASSY | * | 2 -604 | | | | | |
| 8A | 1789-695-330-00 | RELAY/CM/1C ASSY | * | 2 605- | | | | | |
| 9 | 1800-652-400-00 | RELAY/5P ASSY | * | 1 -604 | | | | | |
| 9A | 1789-695-330-00 | RELAY/CM/1C ASSY | * | 1 605- | | | | | |
| 10 | 1800-652-400-00 | RELAY/5P ASSY | * | 1 -604 | | | | | |
| 10A | 1789-695-330-00 | RELAY/CM/1C ASSY | * | 1 605- | | | | | |
| 11 | 1800-652-400-00 | RELAY/5P ASSY | * | 1 -604 | | | | | |
| 11A | 1789-695-330-00 | RELAY/CM/1C ASSY | * | 1 605- | | | | | |
| 12 | 1800-652-400-00 | RELAY/5P ASSY | * | 1 -604 | | | | | |
| 12A | 1789-695-330-00 | RELAY/CM/1C ASSY | * | 1 605- | | | | | |
| 13 | 1719-650-250-00 | RELAY ASSY | * | 4 | | | | | |
| 14 | V360-260-005-00 | NUT/WASHER/M5 | * | 4 | | | | | |
| 15 | 1774-680-250-00 | UNIT/TIMER ASSY | * | 1 | | | | | |
| 16 | V360-260-006-00 | NUT/WASHER/M6 | * | 1 | | | | | |
| 17 | 1739-681-220-20 | RELAY/FLASHER/EEC | * | 1 | | | | | |
| 18 | V360-260-006-00 | NUT/WASHER/M6 | * | 1 | | | | | |
| 19 | 1740-680-530-20 | HORN ASSY | * | 1 | | | | | |
| 20 | V210-360-601-60 | BOLT,SP/M6X16 | * | 2 | | | | | |
| 21 | 1690-650-320-00 | HORN ASSY | * | 1 | | | | | |
| 22 | V360-260-006-00 | NUT/WASHER/M6 | * | 1 | | | | | |

# FIG. 84 SWITCH SYSTEM(225F-B TYPE)(2/2)

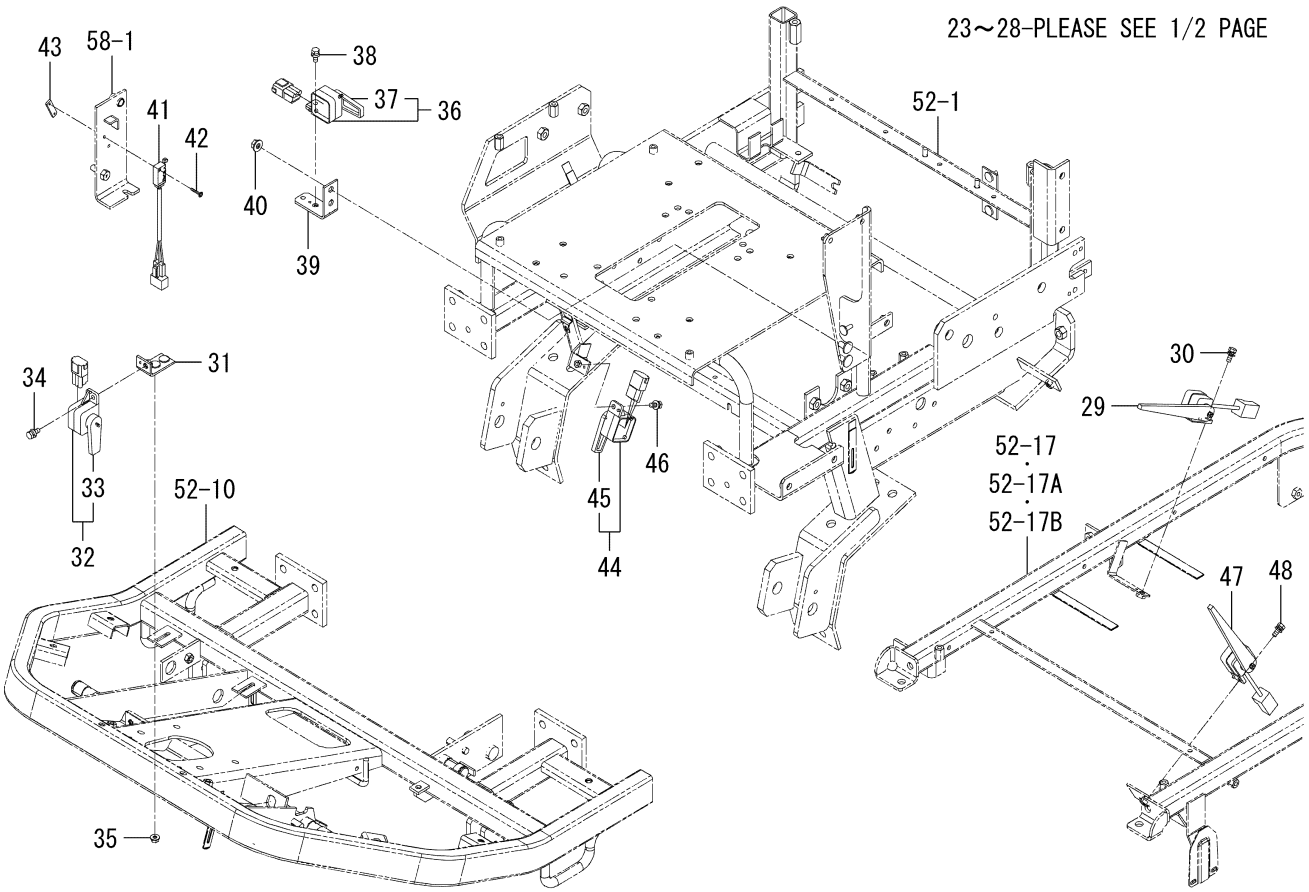


1832-680E-0100

| KEY | PART CODE | DESCRIPTION | SPC | TYPE OF MODEL | | ITC | COL | GRP | REMARKS |
|---|---|---|---|---|---|---|---|---|---|
| | | | | SF225F | SF237F | | | | |
| 23 | 2515-665-210-00 | BUZZER | * | 1 | | | | | |
| 24 | 1772-654-250-10 | SWITCH/PUSH ASSY | * | 1 | | | | | |
| 25 | 1772-654-251-00 | NUT | * | 2 | | | | | |
| 26 | 1772-654-280-10 | SWITCH/PUSH ASSY | * | 1 | | | | | |
| 27 | 1772-654-281-00 | NUT | * | 2 | | | | | |
| 28 | 1772-654-282-00 | BOOT | * | 1 | | | | | |
| 29 | 3829-282-610-00 | SENSOR/STRAW/L/165 | * | 1 | | | | | |
| 30 | V210-360-601-60 | BOLT,SP/M6X16 | * | 1 | | | | | |
| 31 | 1832-680-230-00 | STAY/SWITCH/HST COMP | * | 2 | | | | | |
| 32 | 1716-680-330-10 | SWITCH/LEVER ASSY | * | 2 | | | | | |
| 33 | 1716-680-222-00 | ARM | * | 2 | | | | | |
| 34 | V210-360-601-60 | BOLT,SP/M6X16 | * | 2 | | | | | |
| 35 | V360-260-006-00 | NUT/WASHER/M6 | * | 4 | | | | | |
| 36 | 1716-680-330-10 | SWITCH/LEVER ASSY | * | 1 | | | | | |
| 37 | 1716-680-222-00 | ARM | * | 1 | | | | | |
| 38 | V210-360-601-60 | BOLT,SP/M6X16 | * | 1 | | | | | |
| 39 | 1809-801-280-00 | PLATE/SWITCH COMP | * | 1 | | | | | |
| 40 | V362-260-008-00 | NUT/WASHER/M8 | * | 2 | | | | | |
| 41 | 1725-680-220-10 | SWITCH/LIMIT ASSY | * | 1 | | | | | |
| 42 | 1614-129-003-00 | SCREW/M03X20 | * | 2 | | | | | |
| 43 | 3642-496-007-10 | PLATE,SWITCH | * | 1 | | | | | |
| 44 | 1716-680-330-10 | SWITCH/LEVER ASSY | * | 1 | | | | | |
| 45 | 1716-680-222-00 | ARM | * | 1 | | | | | |
| 46 | V210-360-601-60 | BOLT,SP/M6X16 | * | 1 | | | | | |
| 47 | 3829-282-610-00 | SENSOR/STRAW/L/165 | * | 1 | | | | | |
| 48 | V210-360-601-60 | BOLT,SP/M6X16 | * | 1 | | | | | |
| | | | | | | | | | |
| | | | | | | | | | |
| | | | | | | | | | |
| | | | | | | | | | |

# FIG. 85 SWITCH SYSTEM(225F EXCEPT B)(1/2)

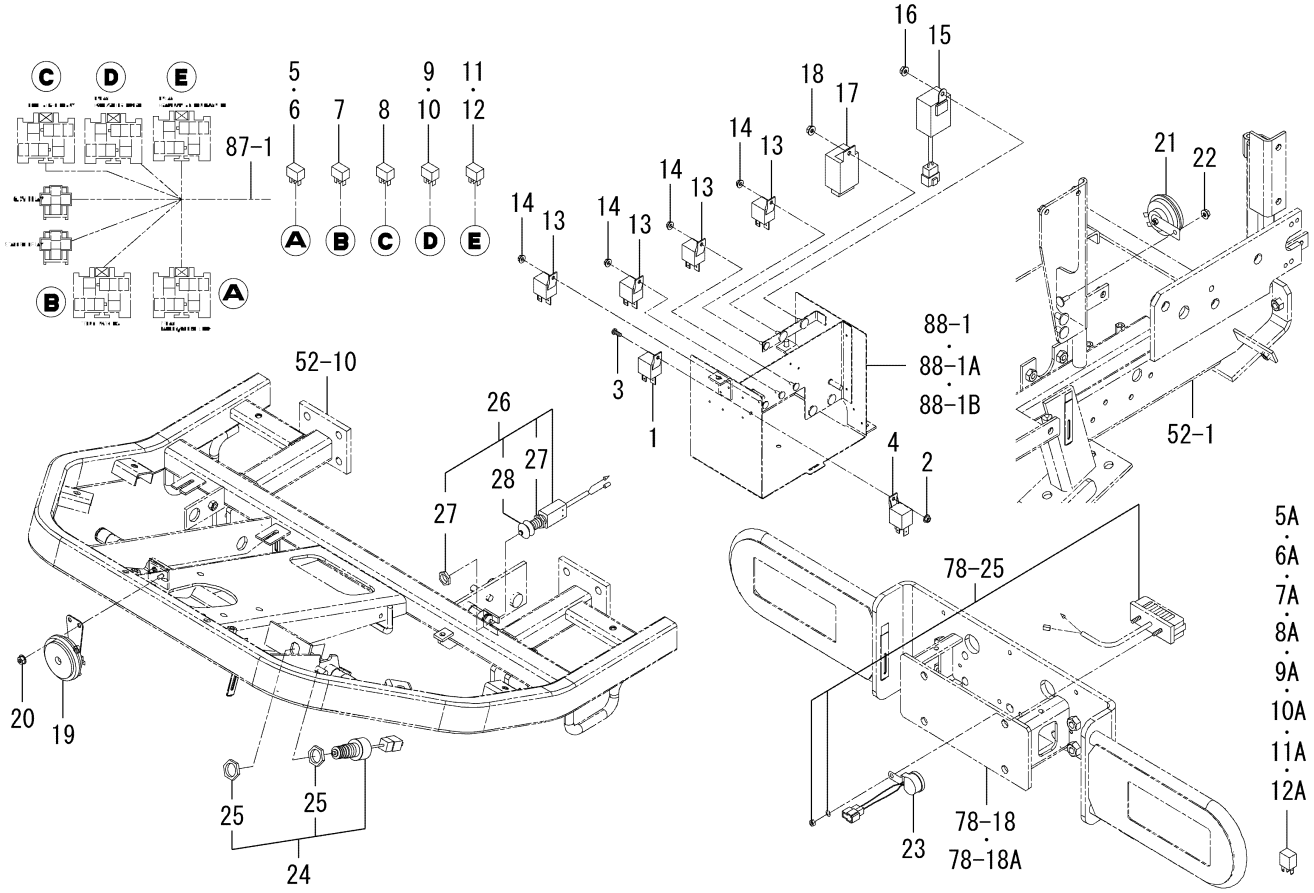


1832-680F-0100

| KEY | PART CODE | DESCRIPTION | SPC | TYPE OF MODEL | | ITC | COL | GRP | REMARKS |
|---|---|---|---|---|---|---|---|---|---|
| | | | | SF225F | SF237F | | | | |
| 1 | 1719-650-250-00 | RELAY ASSY | * | 1 | | | | | |
| 2 | V360-260-005-00 | NUT/WASHER/M5 | * | 1 | | | | | |
| 3 | V111-165-001-20 | SCREW/M5X12 | * | 1 | | | | | |
| 4 | 1719-650-250-00 | RELAY ASSY | * | 1 | | | | | |
| 5 | 1800-652-400-00 | RELAY/5P ASSY | * | 1 -603 | | | | | |
| 5A | 1789-695-330-00 | RELAY/CM/1C ASSY | * | 1 604- | | | | | |
| 6 | 1800-652-400-00 | RELAY/5P ASSY | * | 1 -603 | | | | | |
| 6A | 1789-695-330-00 | RELAY/CM/1C ASSY | * | 1 604- | | | | | |
| 7 | 1800-652-400-00 | RELAY/5P ASSY | * | 1 -603 | | | | | |
| 7A | 1789-695-330-00 | RELAY/CM/1C ASSY | * | 1 604- | | | | | |
| 8 | 1800-652-400-00 | RELAY/5P ASSY | * | 2 -603 | | | | | |
| 8A | 1789-695-330-00 | RELAY/CM/1C ASSY | * | 2 604- | | | | | |
| 9 | 1800-652-400-00 | RELAY/5P ASSY | * | 1 -603 | | | | | |
| 9A | 1789-695-330-00 | RELAY/CM/1C ASSY | * | 1 604- | | | | | |
| 10 | 1800-652-400-00 | RELAY/5P ASSY | * | 1 -603 | | | | | |
| 10A | 1789-695-330-00 | RELAY/CM/1C ASSY | * | 1 604- | | | | | |
| 11 | 1800-652-400-00 | RELAY/5P ASSY | * | 1 -603 | | | | | |
| 11A | 1789-695-330-00 | RELAY/CM/1C ASSY | * | 1 604- | | | | | |
| 12 | 1800-652-400-00 | RELAY/5P ASSY | * | 1 -603 | | | | | |
| 12A | 1789-695-330-00 | RELAY/CM/1C ASSY | * | 1 604- | | | | | |
| 13 | 1719-650-250-00 | RELAY ASSY | * | 4 | | | | | |
| 14 | V360-260-005-00 | NUT/WASHER/M5 | * | 4 | | | | | |
| 15 | 1774-680-250-00 | UNIT/TIMER ASSY | * | 1 | | | | | |
| 16 | V360-260-006-00 | NUT/WASHER/M6 | * | 1 | | | | | |
| 17 | 1739-681-220-20 | RELAY/FLASHER/EEC | * | 1 | | | | | |
| 18 | V360-260-006-00 | NUT/WASHER/M6 | * | 1 | | | | | |
| 19 | 1740-680-530-20 | HORN ASSY | * | 1 | | | | | |
| 20 | V210-360-601-60 | BOLT,SP/M6X16 | * | 2 | | | | | |
| 21 | 1690-650-320-00 | HORN ASSY | * | 1 | | | | | |
| 22 | V360-260-006-00 | NUT/WASHER/M6 | * | 1 | | | | | |

# FIG. 85 SWITCH SYSTEM(225F EXCEPT B)(2/2)

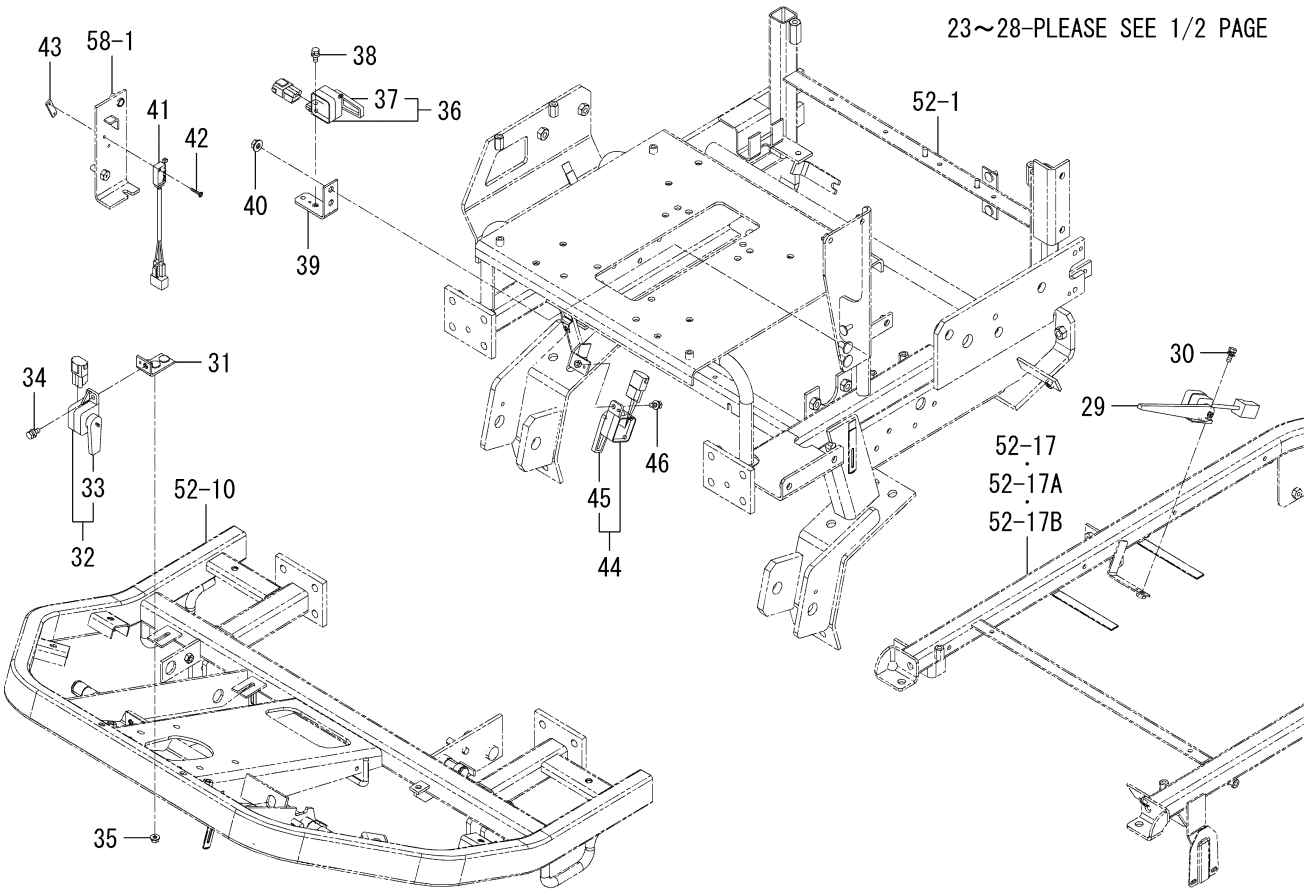


1832-680F-0100

| KEY | PART CODE | DESCRIPTION | SPC | TYPE OF MODEL | | ITC | COL | GRP | REMARKS |
|---|---|---|---|---|---|---|---|---|---|
| | | | | SF225F | SF237F | | | | |
| 23 | 2515-665-210-00 | BUZZER | * | 1 | | | | | |
| 24 | 1772-654-250-10 | SWITCH/PUSH ASSY | * | 1 | | | | | |
| 25 | 1772-654-251-00 | NUT | * | 2 | | | | | |
| 26 | 1772-654-280-10 | SWITCH/PUSH ASSY | * | 1 | | | | | |
| 27 | 1772-654-281-00 | NUT | * | 2 | | | | | |
| 28 | 1772-654-282-00 | BOOT | * | 1 | | | | | |
| 29 | 3829-282-610-00 | SENSOR/STRAW/L/165 | * | 1 | | | | | |
| 30 | V210-360-601-60 | BOLT,SP/M6X16 | * | 1 | | | | | |
| 31 | 1832-680-230-00 | STAY/SWITCH/HST COMP | * | 2 | | | | | |
| 32 | 1716-680-330-10 | SWITCH/LEVER ASSY | * | 2 | | | | | |
| 33 | 1716-680-222-00 | ARM | * | 2 | | | | | |
| 34 | V210-360-601-60 | BOLT,SP/M6X16 | * | 2 | | | | | |
| 35 | V360-260-006-00 | NUT/WASHER/M6 | * | 4 | | | | | |
| 36 | 1716-680-330-10 | SWITCH/LEVER ASSY | * | 1 | | | | | |
| 37 | 1716-680-222-00 | ARM | * | 1 | | | | | |
| 38 | V210-360-601-60 | BOLT,SP/M6X16 | * | 1 | | | | | |
| 39 | 1809-801-280-00 | PLATE/SWITCH COMP | * | 1 | | | | | |
| 40 | V362-260-008-00 | NUT/WASHER/M8 | * | 2 | | | | | |
| 41 | 1725-680-220-10 | SWITCH/LIMIT ASSY | * | 1 | | | | | |
| 42 | 1614-129-003-00 | SCREW/M03X20 | * | 2 | | | | | |
| 43 | 3642-496-007-10 | PLATE,SWITCH | * | 1 | | | | | |
| 44 | 1716-680-330-10 | SWITCH/LEVER ASSY | * | 1 | | | | | |
| 45 | 1716-680-222-00 | ARM | * | 1 | | | | | |
| 46 | V210-360-601-60 | BOLT,SP/M6X16 | * | 1 | | | | | |
| | | | | | | | | | |
| | | | | | | | | | |
| | | | | | | | | | |
| | | | | | | | | | |
| | | | | | | | | | |
| | | | | | | | | | |

# FIG. 86 HARNESS SYSTEM(237F)(1/2)

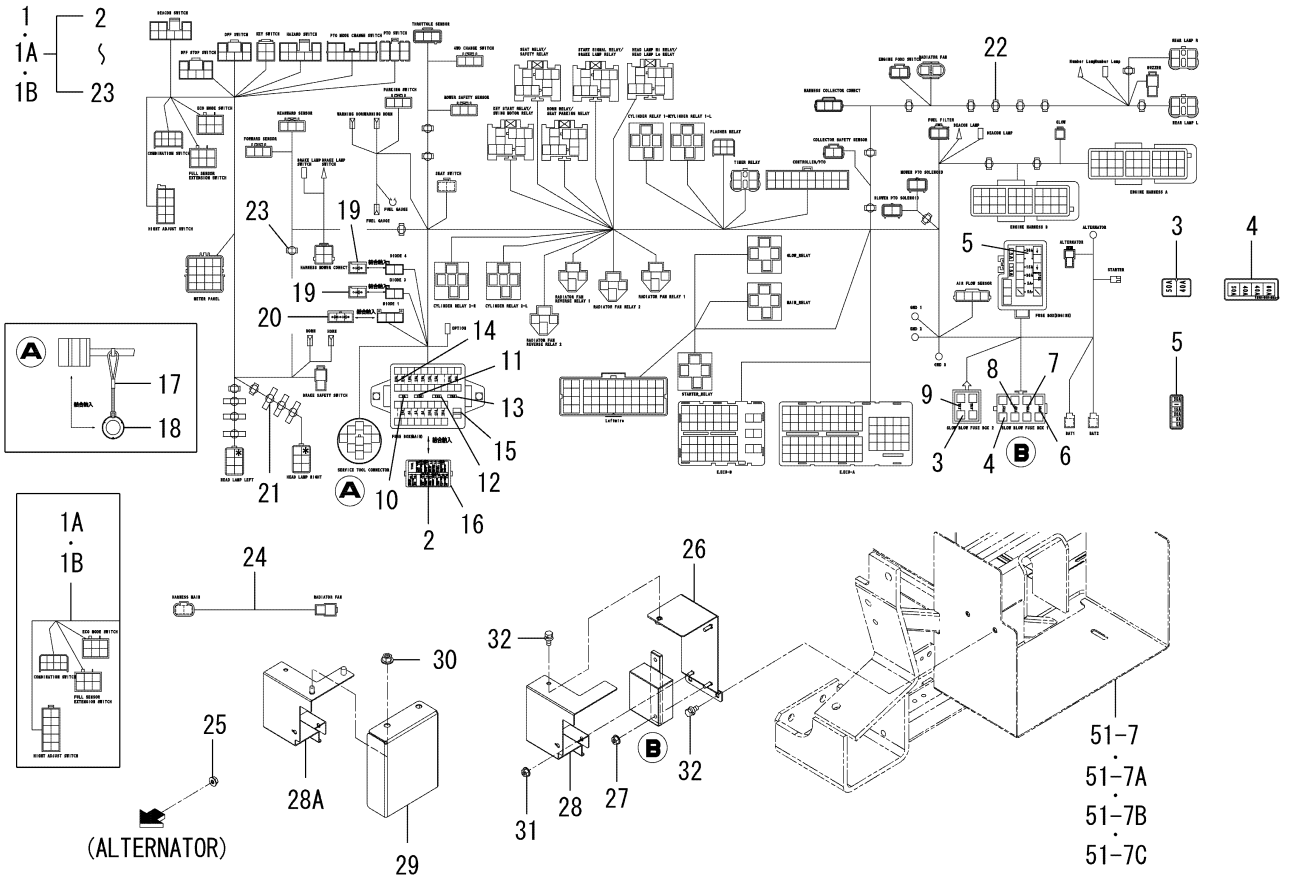


1832-690B-0100

| KEY | PART CODE | DESCRIPTION | SPC | TYPE OF MODEL | | ITC | COL | GRP | REMARKS |
|---|---|---|---|---|---|---|---|---|---|
| | | | | SF225F | SF237F | | | | |
| 1 | 1832-690-600-10 | HARNESS/MAIN ASSY | * | | 1 -790 | 1 | | | |
| 1A | 1832-690-600-20 | HARNESS/MAIN ASSY | * | | 1 -986 | 1 | | | |
| 1B | 1832-690-600-30 | HARNESS/MAIN ASSY | * | | 1 987- | 1 | | | |
| 2 | 1832-690-602-10 | LABEL/FUSE | * | | 1 | 1 | | | |
| 3 | 1832-690-603-00 | LABEL/SLOWBLOW/50/40 | * | | 1 | | | | |
| 4 | 1809-690-602-00 | LABEL/SLOWBLOW | * | | 1 | | | | |
| 5 | 1817-650-443-00 | LABEL/FUSE/ECU | * | | 1 | | | | |
| 6 | 1817-650-441-00 | FUSE/SLOWBLOW/80A | * | | 1 | | | | |
| 7 | 1832-690-604-00 | FUSE/SLOWBLOW/40A | * | | 1 | | | | |
| 8 | 1650-650-222-00 | FUSE/SLOW BLOW/40A | * | | 2 | | | | |
| 9 | 1729-652-232-00 | FUSE/SLOW BLOW/50A | * | | 2 | | | | |
| 10 | 3824-247-202-00 | FUSE/BLADE/32V05A | * | | 7 | | | | |
| 11 | 3821-262-202-00 | FUSE/BLADE/32V10A | * | | 7 | | | | |
| 12 | 3821-262-203-00 | FUSE/BLADE/32V15A | * | | 6 | | | | |
| 13 | 3821-262-204-00 | FUSE/BLADE/32V20A | * | | 3 | | | | |
| 14 | 3821-262-205-00 | FUSE/BLADE/32V30A | * | | 4 | | | | |
| 15 | 3821-262-209-00 | TOOL/FUSE | * | | 1 | | | | |
| 16 | 3824-247-204-00 | COVER/FUSE | * | | 1 | | | | |
| 17 | 1805-652-206-00 | STRING | * | | 1 | | | | |
| 18 | 1800-652-202-00 | CAP/CONNECTOR | * | | 1 | | | | |
| 19 | 3650-262-202-00 | DIODE/3.0A | * | | 2 | | | | |
| 20 | 3650-261-221-00 | DIODE/1.5A-3P ASSY | * | | 1 | | | | |
| 21 | 1725-690-071-00 | BAND | * | | 6 | | | | |
| 22 | 1805-652-207-00 | CLIP/BAND | * | | 12 | | | | |
| 23 | 1809-690-205-00 | CLIP/BAND/4.5 | * | | 6 | | | | |
| 24 | 1832-690-900-00 | HARNESS/FAN ASSY | * | | 1 780- | | | | |
| 25 | V360-260-006-00 | NUT/WASHER/M6 | * | | 1 | | | | |
| 26 | 1809-690-710-00 | BRACKET/FUSE COMP | * | | 1 | | | | |
| 27 | V360-260-006-00 | NUT/WASHER/M6 | * | | 2 | | | | |
| 28 | 1832-690-061-10 | COVER/FUSE/237 | * | | 1 -881 | 1 | | | |

# FIG. 86 HARNESS SYSTEM(237F)(2/2)

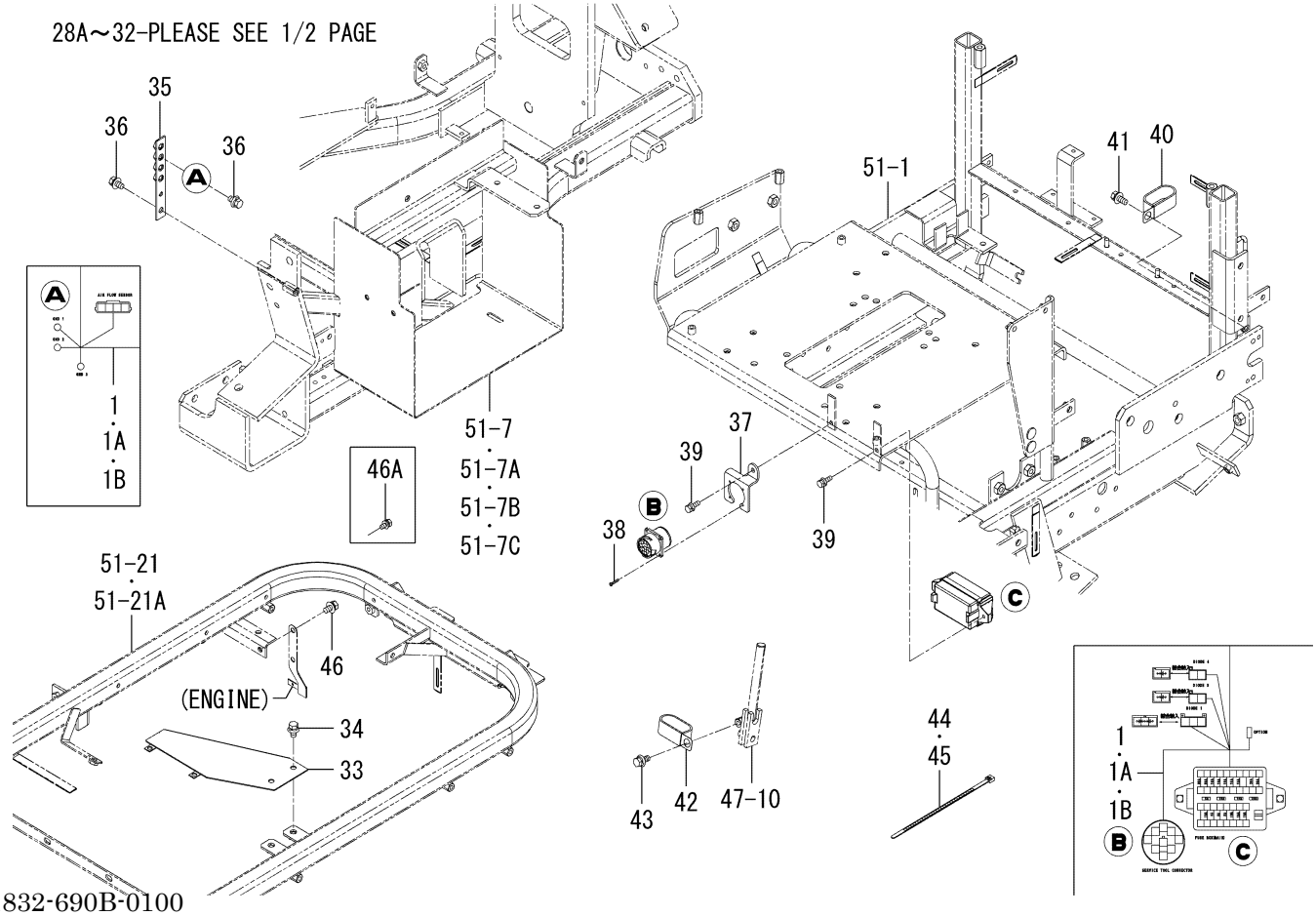


1832-690B-0100

| KEY | PART CODE | DESCRIPTION | SPC | TYPE OF MODEL | | ITC | COL | GRP | REMARKS |
|---|---|---|---|---|---|---|---|---|---|
| | | | | SF225F | SF237F | | | | |
| 28A | 1832-690-320-00 | COVER/FUSE/237 COMP | * | | 1 1882- | | | | |
| 29 | 1832-690-062-00 | COVER/FUSEBOX | * | | 1 1882- | | | | |
| 30 | V362-260-008-00 | NUT/WASHER/M8 | * | | 1 1882- | | | | |
| 31 | V360-260-006-00 | NUT/WASHER/M6 | * | | 1 | | | | |
| 32 | V210-360-601-60 | BOLT,SP/M6X16 | * | | 3 | | | | |
| 33 | 1832-690-650-00 | BRACKET/CONNECTOR | * | | 1 | | | | |
| 34 | V211-360-801-60 | BOLT,SP/M8X16 | * | | 2 | | | | |
| 35 | 1832-410-290-00 | STAY/EARTH COMP | * | | 1 | | | | |
| 36 | V211-360-801-60 | BOLT,SP/M8X16 | * | | 4 | | | | |
| 37 | 1817-652-001-10 | STAY/CONNECTOR | * | | 1 | | | | |
| 38 | V120-363-001-60 | SCREW,SP/M3X16 | * | | 4 | | | | |
| 39 | V210-360-602-00 | BOLT,SP/M6X20 | * | | 2 | | | | |
| 40 | 3650-261-001-00 | CLAMP/28X55 | * | | 1 | | | | |
| 41 | V211-360-802-00 | BOLT,SP/M8X20 | * | | 1 | | | | |
| 42 | 3650-261-001-00 | CLAMP/28X55 | * | | 1 | | | | |
| 43 | V211-360-802-00 | BOLT,SP/M8X20 | * | | 1 | | | | |
| 44 | 1342-402-006-00 | BAND,WIRE/250 | * | | 10 | | | | |
| 45 | 1376-402-003-00 | BAND,WIRE/140 | * | | 10 | | | | |
| 46 | V211-360-801-60 | BOLT,SP/M8X16 | * | | 1 -442 | | | | |
| 46A | V210-360-601-60 | BOLT,SP/M6X16 | * | | 1 443- | | | | |

# FIG. 87 HARNESS SYSTEM(225F)

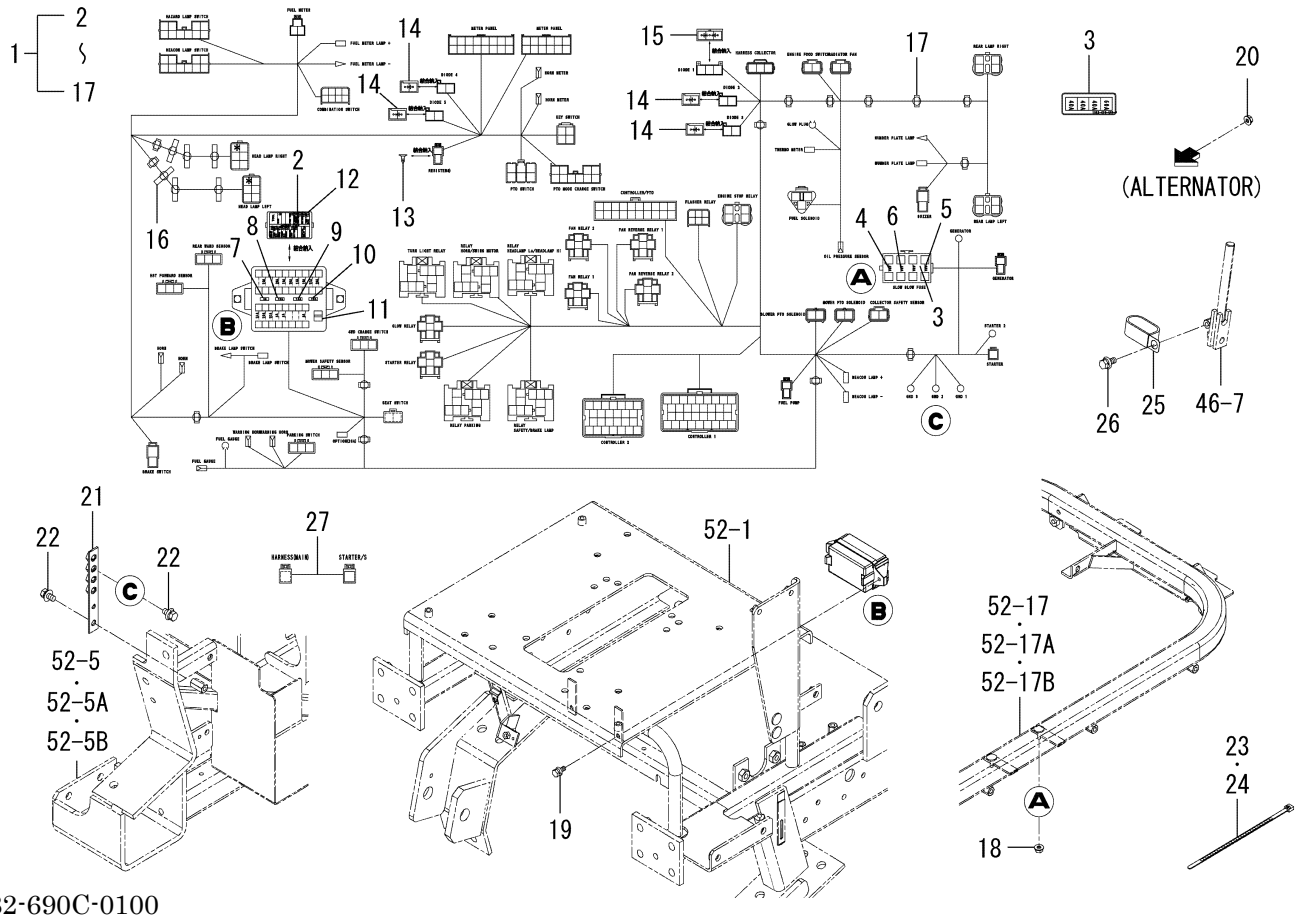


1832-690C-0100

| KEY | PART CODE | DESCRIPTION | SPC | TYPE OF MODEL | | ITC | COL | GRP | REMARKS |
|---|---|---|---|---|---|---|---|---|---|
| | | | | SF225F | SF237F | | | | |
| 1 | 1832-690-800-20 | HARNESS/MAIN ASSY | * | 1 | | 1 | | | |
| 2 | 1832-690-802-10 | LABEL/FUSE | * | 1 | | 1 | | | |
| 3 | 1832-690-803-00 | LABEL/SLOWBLOW | * | 1 | | | | | |
| 4 | 1832-690-604-00 | FUSE/SLOWBLOW/40A | * | 1 | | | | | |
| 5 | 3829-260-303-00 | FUSE/SLOW BLOW/60A | * | 1 | | | | | |
| 6 | 1650-650-222-00 | FUSE/SLOW BLOW/40A | * | 2 | | | | | |
| 7 | 3824-247-202-00 | FUSE/BLADE/32V05A | * | 4 | | | | | |
| 8 | 3821-262-202-00 | FUSE/BLADE/32V10A | * | 6 | | | | | |
| 9 | 3821-262-203-00 | FUSE/BLADE/32V15A | * | 5 | | | | | |
| 10 | 3821-262-204-00 | FUSE/BLADE/32V20A | * | 3 | | | | | |
| 11 | 3821-262-209-00 | TOOL/FUSE | * | 1 | | | | | |
| 12 | 3824-247-204-00 | COVER/FUSE | * | 1 | | | | | |
| 13 | 1809-690-204-00 | RESISTER/8 | * | 1 | | | | | |
| 14 | 3650-262-202-00 | DIODE/3.0A | * | 4 | | | | | |
| 15 | 3650-261-221-00 | DIODE/1.5A-3P ASSY | * | 1 | | | | | |
| 16 | 1725-690-071-00 | BAND | * | 6 | | | | | |
| 17 | 1809-690-205-00 | CLIP/BAND/4.5 | * | 14 | | | | | |
| 18 | V360-260-006-00 | NUT/WASHER/M6 | * | 2 | | | | | |
| 19 | V210-360-602-00 | BOLT,SP/M6X20 | * | 2 | | | | | |
| 20 | V360-260-006-00 | NUT/WASHER/M6 | * | 1 | | | | | |
| 21 | 1832-410-290-00 | STAY/EARTH COMP | * | 1 | | | | | |
| 22 | V211-360-801-60 | BOLT,SP/M8X16 | * | 4 | | | | | |
| 23 | 1342-402-006-00 | BAND,WIRE/250 | * | 15 | | | | | |
| 24 | 1376-402-003-00 | BAND,WIRE/140 | * | 10 | | | | | |
| 25 | 3650-261-001-00 | CLAMP/28X55 | * | 1 | | | | | |
| 26 | V362-260-008-00 | NUT/WASHER/M8 | * | 1 | | | | | |
| 27 | 1832-690-210-00 | HARNESS/JOINT ASSY | * | 1 | | | | | |
| | | | | | | | | | |
| | | | | | | | | | |
| | | | | | | | | | |

# FIG. 88 CONTROLLER SYSTEM(225F)

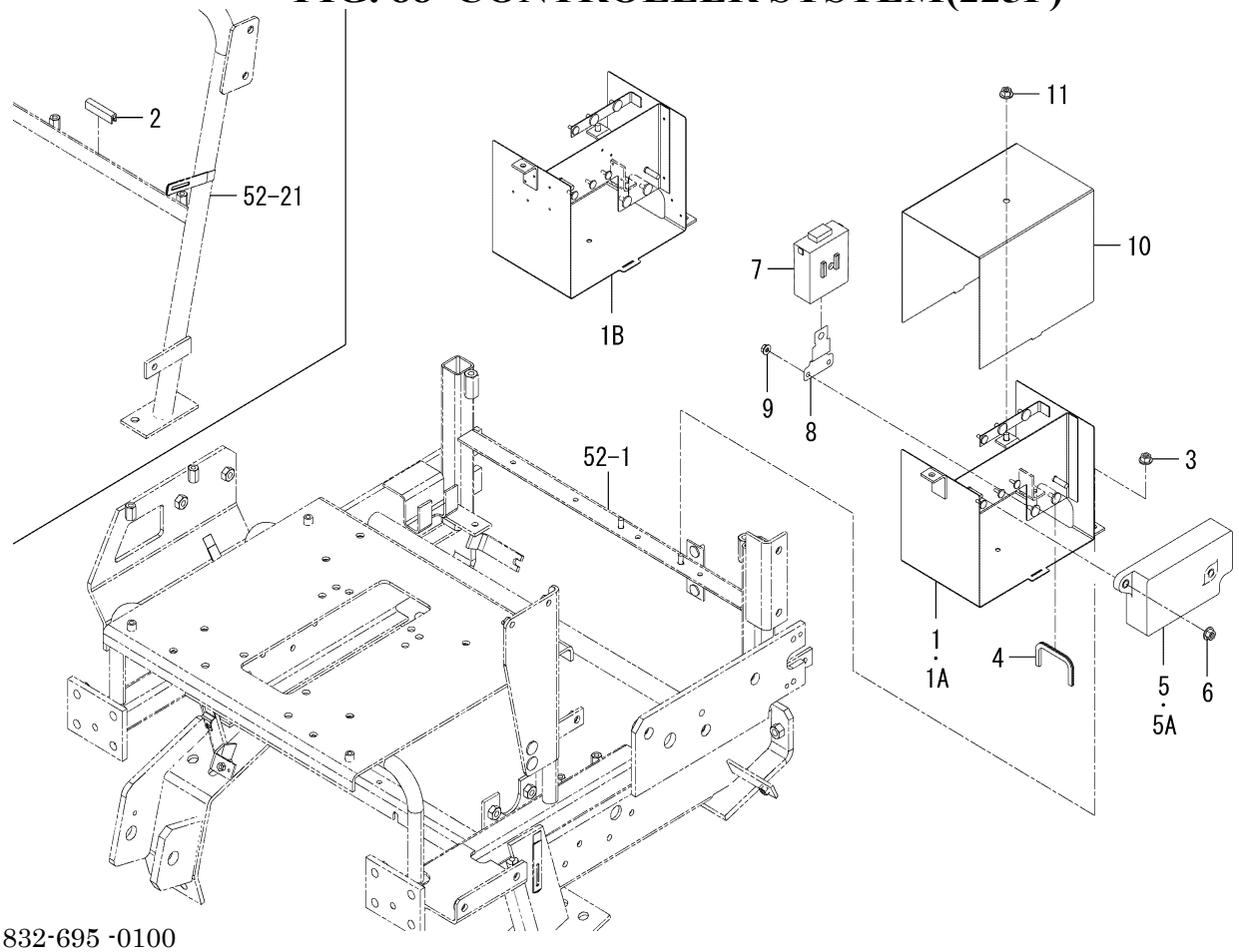


1832-695 -0100

| KEY | PART CODE | DESCRIPTION | SPC | TYPE OF MODEL | | ITC | COL | GRP | REMARKS |
|---|---|---|---|---|---|---|---|---|---|
| | | | | SF225F | SF237F | | | | |
| 1 | 1832-695-210-20 | CASE/CONTROLLER COMP | * | 1 -603 | | | | | |
| 1A | 1832-695-210-30 | CASE/CONTROLLER COMP | * | 1 -847 | | 1 | | | |
| 1B | 1832-695-210-40 | CASE/CONTROLLER COMP | * | 1 848- | | 1 | | | |
| 2 | 3666-202-005-10 | PAD/50 | * | 1 | | | | | |
| 3 | V362-260-008-00 | NUT/WASHER/M8 | * | 2 | | | | | |
| 4 | 1636-631-008-00 | TRIM/140 | * | 1 | | | | | |
| 5 | 1832-695-200-10 | CONTROLLER ASSY | * | 1 -747 | | | | | |
| 5A | 1832-695-200-20 | CONTROLLER ASSY | * | 1 748- | | 1 | | | |
| 6 | V362-260-008-00 | NUT/WASHER/M8 | * | 2 | | | | | |
| 7 | 1832-695-250-10 | CONTROLLER/PTO ASSY | * | 1 | | | | | |
| 8 | 1742-662-001-00 | STAY/CONTROLLER | * | 1 | | | | | |
| 9 | V360-260-006-00 | NUT/WASHER/M6 | * | 2 | | | | | |
| 10 | 1832-695-001-00 | COVER/CONTROLLER | * | 1 | | | 7F | | |
| 11 | V362-260-008-00 | NUT/WASHER/M8 | * | 1 | | | | | |

# FIG. 89 CONTROLLER SYSTEM(237F)

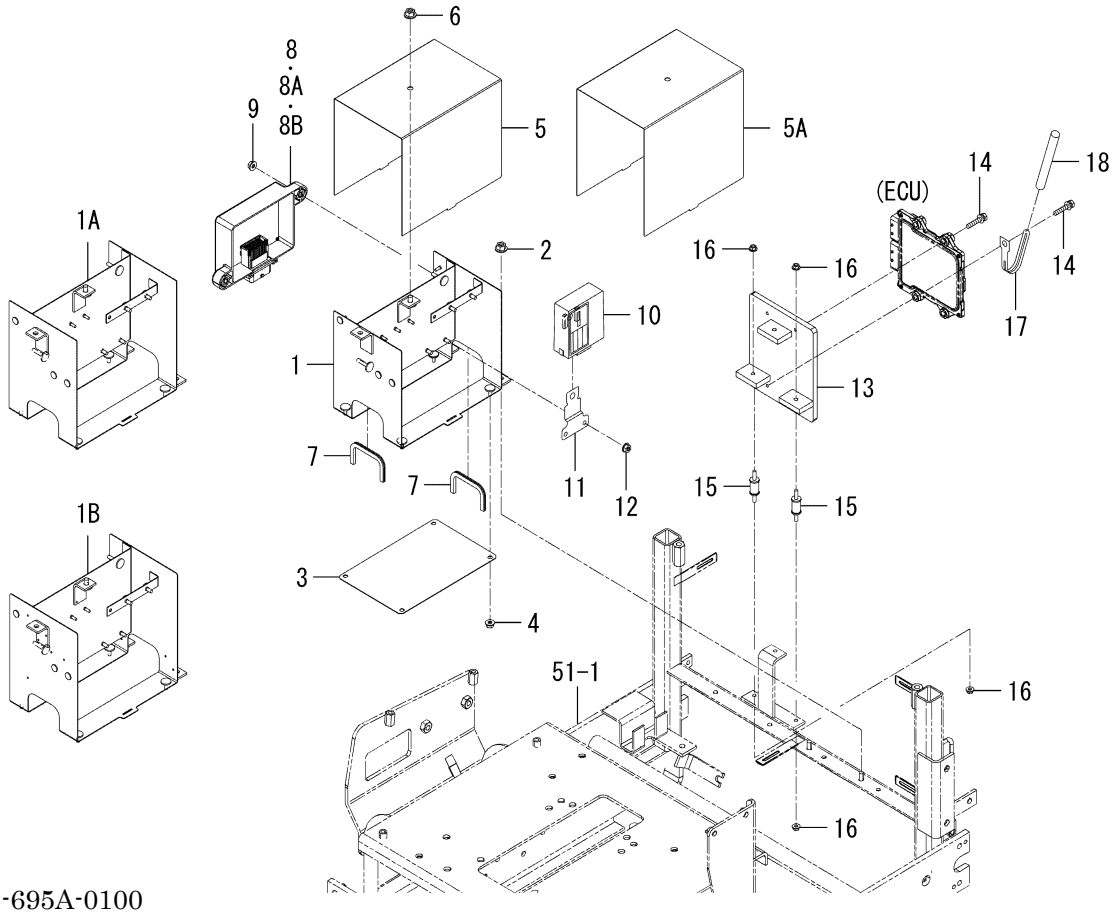


1832-695A-0100

| KEY | PART CODE | DESCRIPTION | SPC | TYPE OF MODEL | | ITC | COL | GRP | REMARKS |
|---|---|---|---|---|---|---|---|---|---|
| | | | | SF225F | SF237F | | | | |
| 1 | 1832-695-610-10 | CASE/CONTROLLER COMP | * | | 1 -907 | 1 | | | |
| 1A | 1832-695-610-20 | CASE/CONTROLLER COMP | * | | 1 -1229 | 1 | | | |
| 1B | 1832-695-610-30 | CASE/CONTROLLER COMP | * | | 1 1230- | 1 | | | |
| 2 | V362-260-008-00 | NUT/WASHER/M8 | * | | 2 | | | | |
| 3 | 1832-695-061-00 | COVER/CASE | * | | 1 | | | | |
| 4 | V360-260-006-00 | NUT/WASHER/M6 | * | | 4 | | | | |
| 5 | 1832-695-001-00 | COVER/CONTROLLER | * | | 1 -907 | | 7F | | |
| 5A | 1832-695-062-00 | COVER/CONTROLLER | * | | 1 908- | | | | |
| 6 | V362-260-008-00 | NUT/WASHER/M8 | * | | 1 | | | | |
| 7 | 1636-631-008-00 | TRIM/140 | * | | 2 | | | | |
| 8 | 1832-695-600-10 | CONTROLLER ASSY | * | | 1 -499 | 1 | | | |
| 8A | 1832-695-600-20 | CONTROLLER ASSY | * | | 1 -779 | 1 | | | |
| 8B | 1832-695-600-30 | CONTROLLER ASSY | * | | 1 780- | 1 | | | |
| 9 | V360-260-006-00 | NUT/WASHER/M6 | * | | 2 | | | | |
| 10 | 1832-695-250-10 | CONTROLLER/PTO ASSY | * | | 1 | | | | |
| 11 | 1742-662-001-00 | STAY/CONTROLLER | * | | 2 | | | | |
| 12 | V360-260-006-00 | NUT/WASHER/M6 | * | | 1 | | | | |
| 13 | 1809-695-630-00 | BRACKET/ECU COMP | * | | 1 | | | | |
| 14 | V210-360-603-50 | BOLT,SP/M6X35 | * | | 4 | | | | |
| 15 | 1809-695-640-00 | INSULATOR/ECU | * | | 3 | | | | |
| 16 | V360-260-005-00 | NUT/WASHER/M5 | * | | 6 | | | | |
| 17 | 1650-650-015-00 | CLAMP | * | | 1 | | | | |
| 18 | 1650-650-017-00 | TUBE/120 | * | | 1 | | | | |
| | | | | | | | | | |
| | | | | | | | | | |
| | | | | | | | | | |
| | | | | | | | | | |
| | | | | | | | | | |
| | | | | | | | | | |
| | | | | | | | | | |

# FIG. 90 FRAME(MAIN)SYSTEM(237F)

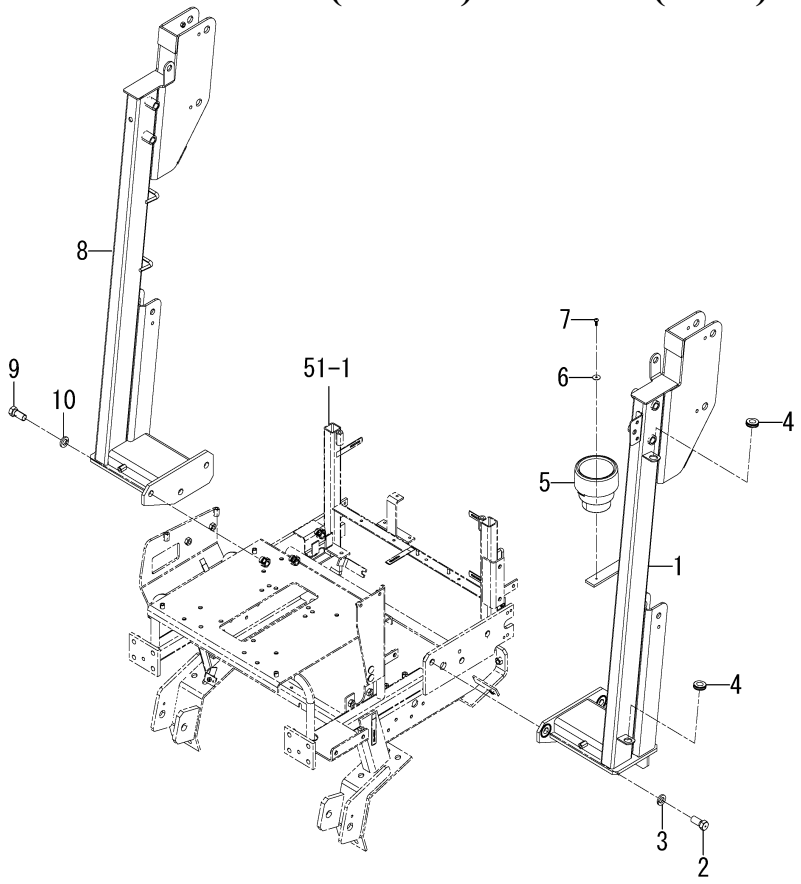


1832-701A-0100

| KEY | PART CODE | DESCRIPTION | SPC | TYPE OF MODEL | | ITC | COL | GRP | REMARKS |
|---|---|---|---|---|---|---|---|---|---|
| | | | | SF225F | SF237F | | | | |
| 1 | 1832-701-610-00 | FRAME/LH/237 COMP | * | | 1 | | | | |
| 2 | V201-461-603-50 | BOLT/M16X35/9T | * | | 3 | | | | |
| 3 | V401-160-016-00 | WASHER,SP/M16 | * | | 3 | | | | |
| 4 | 1575-616-005-00 | GROMMET/17X21X3 | * | | 2 | | | | |
| 5 | 1742-606-001-10 | TRAY/BOTTLE | * | | 1 | | | | |
| 6 | 3829-248-003-00 | WASHER/05X20X01 | * | | 1 | | | | |
| 7 | V120-265-001-60 | SCREW,SEMS/M5X16 | * | | 1 | | | | |
| 8 | 1832-701-620-00 | FRAME/RH/237 COMP | * | | 1 | | | | |
| 9 | V201-461-603-50 | BOLT/M16X35/9T | * | | 3 | | | | |
| 10 | V401-160-016-00 | WASHER,SP/M16 | * | | 3 | | | | |

# FIG. 91 FRAME(MAIN)SYSTEM(225F)

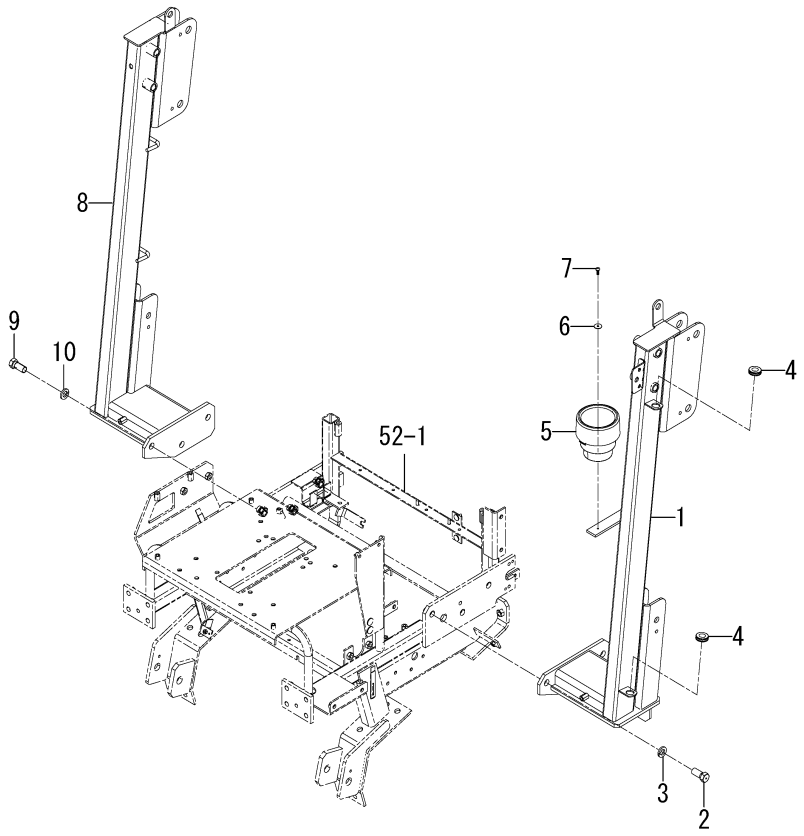


1832-701B-0100

| KEY | PART CODE | DESCRIPTION | SPC | TYPE OF MODEL | | ITC | COL | GRP | REMARKS |
|---|---|---|---|---|---|---|---|---|---|
| | | | | SF225F | SF237F | | | | |
| 1 | 1832-701-810-00 | FRAME/LH/225 COMP | * | 1 | | | | | |
| 2 | V201-461-603-50 | BOLT/M16X35/9T | * | 3 | | | | | |
| 3 | V401-160-016-00 | WASHER,SP/M16 | * | 3 | | | | | |
| 4 | 1575-616-005-00 | GROMMET/17X21X3 | * | 2 | | | | | |
| 5 | 1742-606-001-10 | TRAY/BOTTLE | * | 1 | | | | | |
| 6 | 3829-248-003-00 | WASHER/05X20X01 | * | 1 | | | | | |
| 7 | V120-265-001-60 | SCREW,SEMS/M5X16 | * | 1 | | | | | |
| 8 | 1832-701-830-00 | FRAME/RH/225 COMP | * | 1 | | | | | |
| 9 | V201-461-603-50 | BOLT/M16X35/9T | * | 3 | | | | | |
| 10 | V401-160-016-00 | WASHER,SP/M16 | * | 3 | | | | | |

# FIG. 92 FRAME(UPPER)SYSTEM

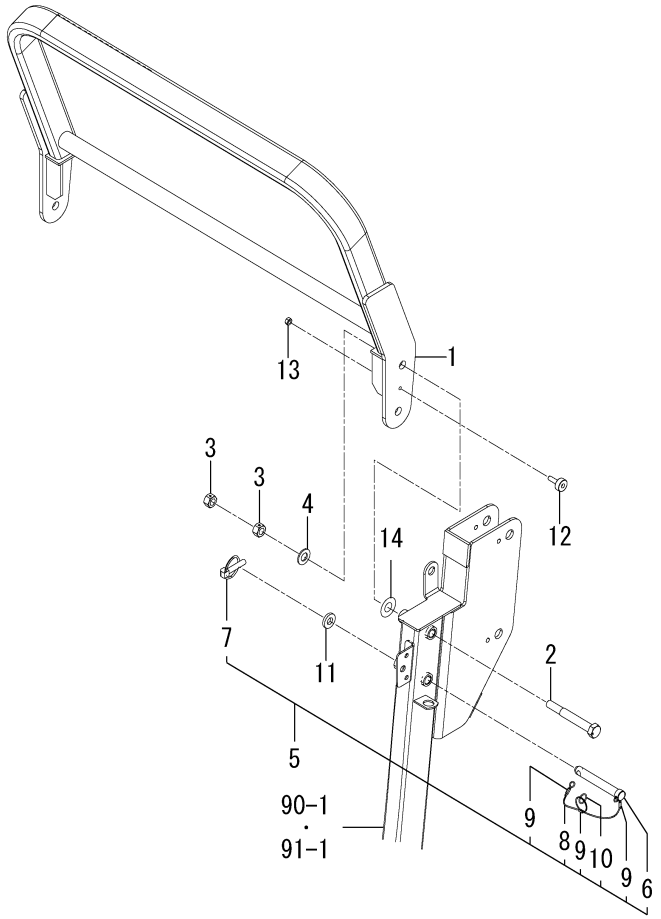


1832-702 -0100

| KEY | PART CODE | DESCRIPTION | SPC | TYPE OF MODEL | | ITC | COL | GRP | REMARKS |
|---|---|---|---|---|---|---|---|---|---|
| | | | | SF225F | SF237F | | | | |
| 1 | 1832-702-210-00 | FRAME/UPPER COMP | * | 1 | 1 | | 4L | | |
| 2 | 1832-702-002-00 | BOLT/M16X120 | * | 2 | 2 | | | | |
| 3 | 1773-702-001-10 | NUT/M16 | * | 4 | 4 | | | | |
| 4 | V411-260-016-00 | WASHER,PL/M16 | * | 2 | 2 | | | | |
| 5 | 1832-702-250-00 | PIN ASSY | * | 2 | 2 | | | | |
| 6 | 1832-702-251-00 | PIN/19X124 | * | 2 | 2 | | | | |
| 7 | 1673-525-002-30 | LINKPIN | * | 2 | 2 | | | | |
| 8 | 1614-702-551-20 | BAND | * | 2 | 2 | | | | |
| 9 | 1614-702-552-00 | RING | * | 6 | 6 | | | | |
| 10 | V720-102-402-00 | O-RING/1A,P20 | * | 2 | 2 | | | | |
| 11 | 1773-702-002-00 | INSULATOR | * | 2 | 2 | | | | |
| 12 | 1560-630-024-00 | INSULATOR | * | 2 | 2 | | | | |
| 13 | V304-260-008-00 | NUT/M8 | * | 2 | 2 | | | | |
| 14 | 1690-742-008-10 | WASHER/17X36X01 | * | 2 | 2 | | | | |

# FIG. 93 BLOWER SYSTEM(225F-B TYPE)

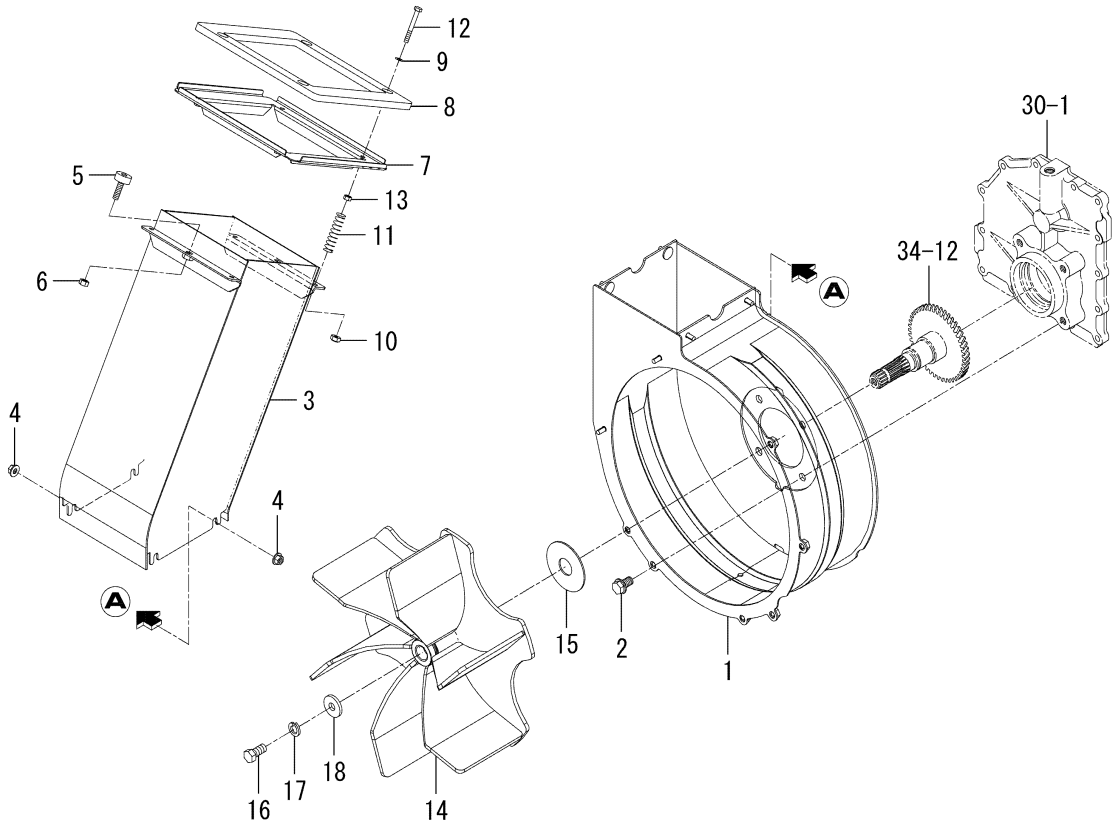


1832-801 -0100

| KEY | PART CODE | DESCRIPTION | SPC | TYPE OF MODEL | | ITC | COL | GRP | REMARKS |
|---|---|---|---|---|---|---|---|---|---|
| | | | | SF225F | SF237F | | | | |
| 1 | 1832-801-210-30 | CASE/BLOWER COMP | * | 1 | | | | | |
| 2 | V231-361-202-00 | FLANGEBOLT/M12X20 | * | 4 | | | | | |
| 3 | 1832-801-220-10 | CHUTE/BLOWER COMP | * | 1 | | | | | |
| 4 | V362-260-008-00 | NUT/WASHER/M8 | * | 4 | | | | | |
| 5 | 1421-602-005-10 | CUSHION,B/ RUBBER | * | 2 | | | | | |
| 6 | V304-260-008-00 | NUT/M8 | * | 2 | | | | | |
| 7 | 1832-801-230-00 | CHUTE/GUIDE COMP | * | 1 | | | | | |
| 8 | 1809-801-002-10 | INSULATOR/CHUTE | * | 1 | | | | | |
| 9 | V411-260-006-00 | WASHER,PL/M6 | * | 4 | | | | | |
| 10 | 1118-606-002-10 | U-NUT | * | 4 | | | | | |
| 11 | 8654-501-043-00 | SPRING/HC058 | * | 4 | | | | | |
| 12 | V200-260-605-00 | BOLT/M6X50 | * | 4 | | | | | |
| 13 | V301-260-006-00 | NUT/M6 | * | 4 | | | | | |
| 14 | 1832-801-250-00 | FAN COMP | * | 1 | | | | | |
| 15 | 8669-865-003-00 | WASHER/27X79X02 | * | 1 | | | | | |
| 16 | 1809-801-004-00 | BOLT/LH/M12X1.25X25 | * | 1 | | | | | |
| 17 | 1809-801-007-00 | S.W/LH/M12 | * | 1 | | | | | |
| 18 | 3621-702-003-00 | WASHER,PULLEY | * | 1 | | | | | |
| | | | | | | | | | |
| | | | | | | | | | |
| | | | | | | | | | |
| | | | | | | | | | |
| | | | | | | | | | |
| | | | | | | | | | |
| | | | | | | | | | |
| | | | | | | | | | |
| | | | | | | | | | |
| | | | | | | | | | |
| | | | | | | | | | |
| | | | | | | | | | |

# FIG. 94 BLOWER SYSTEM(237F-B TYPE)

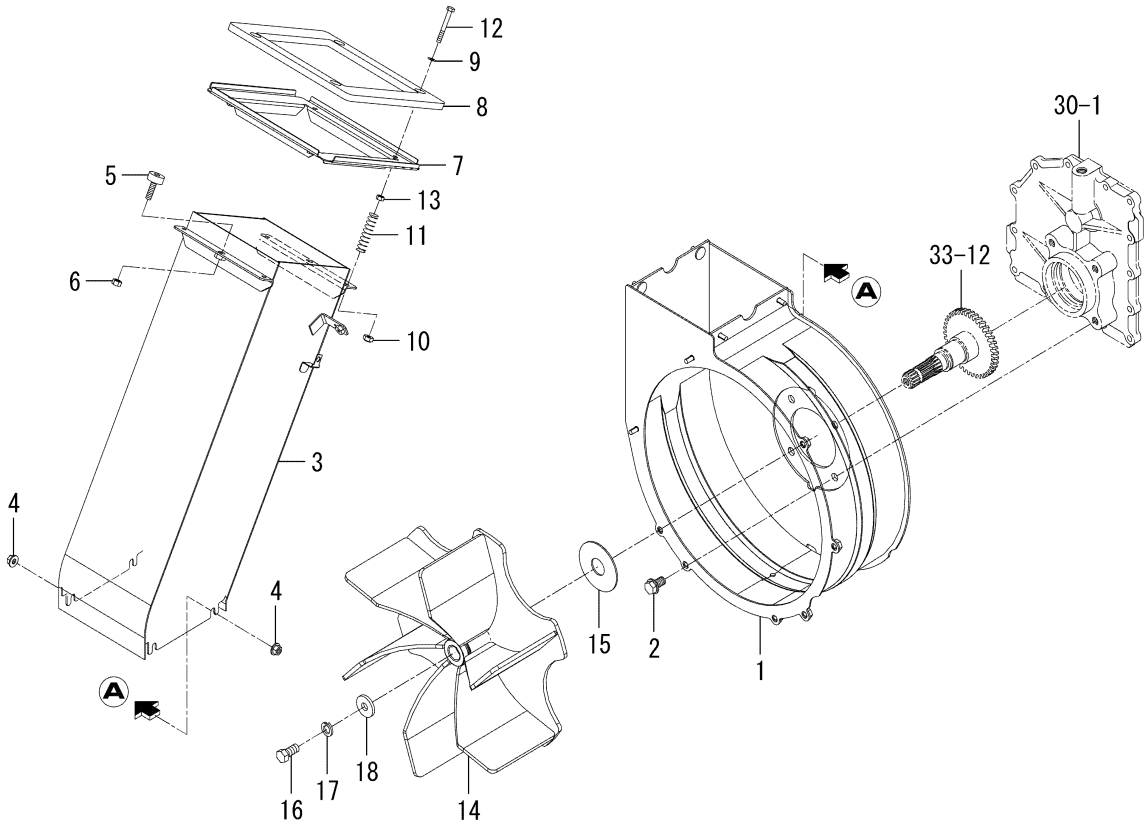


1832-801A-0100

| KEY | PART CODE | DESCRIPTION | SPC | TYPE OF MODEL | | ITC | COL | GRP | REMARKS |
|---|---|---|---|---|---|---|---|---|---|
| | | | | SF225F | SF237F | | | | |
| 1 | 1832-801-210-30 | CASE/BLOWER COMP | * | | 1 | | | | |
| 2 | V231-361-202-00 | FLANGEBOLT/M12X20 | * | | 4 | | | | |
| 3 | 1832-801-610-10 | CHUTE/BLOWER/23 COMP | * | | 1 | 1 | | | |
| 4 | V362-260-008-00 | NUT/WASHER/M8 | * | | 4 | | | | |
| 5 | 1421-602-005-10 | CUSHION,B/ RUBBER | * | | 2 | | | | |
| 6 | V304-260-008-00 | NUT/M8 | * | | 2 | | | | |
| 7 | 1832-801-230-00 | CHUTE/GUIDE COMP | * | | 1 | | | | |
| 8 | 1809-801-002-10 | INSULATOR/CHUTE | * | | 1 | | | | |
| 9 | V411-260-006-00 | WASHER,PL/M6 | * | | 4 | | | | |
| 10 | 1118-606-002-10 | U-NUT | * | | 4 | | | | |
| 11 | 8654-501-043-00 | SPRING/HC058 | * | | 4 | | | | |
| 12 | V200-260-605-00 | BOLT/M6X50 | * | | 4 | | | | |
| 13 | V301-260-006-00 | NUT/M6 | * | | 4 | | | | |
| 14 | 1832-801-250-00 | FAN COMP | * | | 1 | | | | |
| 15 | 8669-865-003-00 | WASHER/27X79X02 | * | | 1 | | | | |
| 16 | 1809-801-004-00 | BOLT/LH/M12X1.25X25 | * | | 1 | | | | |
| 17 | 1809-801-007-00 | S.W/LH/M12 | * | | 1 | | | | |
| 18 | 3621-702-003-00 | WASHER,PULLEY | * | | 1 | | | | |

# FIG. 95 ORNAMENT(237F)

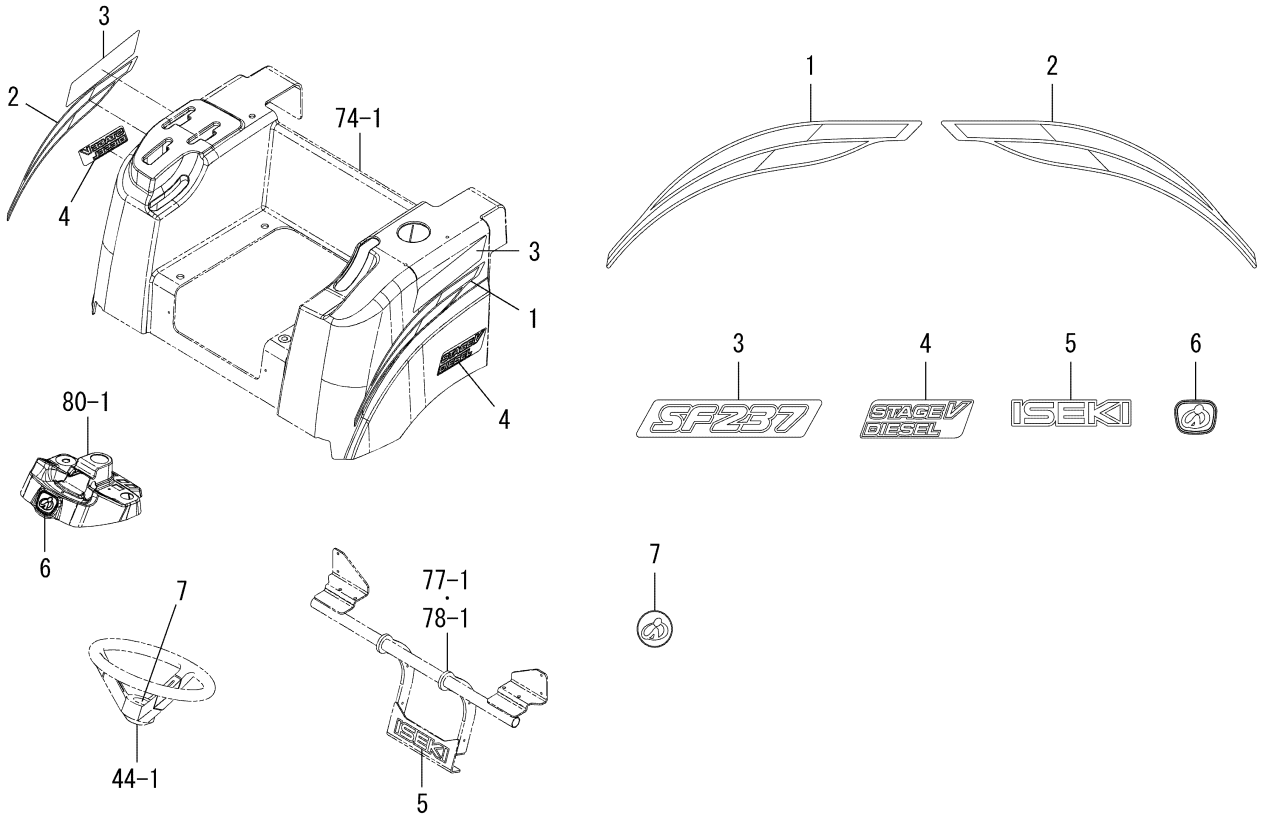


1832-901B-0100

| KEY | PART CODE | DESCRIPTION | SPC | TYPE OF MODEL | | ITC | COL | GRP | REMARKS |
|---|---|---|---|---|---|---|---|---|---|
| | | | | SF225F | SF237F | | | | |
| 1 | 1832-901-061-00 | MOLDING/FENDER/LH | * | | 1 | | | | |
| 2 | 1832-901-062-00 | MOLDING/FENDER/RH | * | | 1 | | | | |
| 3 | 1832-901-063-00 | ORNAMENT/237 | * | | 2 | | | | |
| 4 | 1809-901-064-00 | ORNAMENT/DIESEL | * | | 2 | | | | |
| 5 | 1716-901-016-00 | ORNAMENT/ISEKI | * | | 1 | | | | |
| 6 | 3533-901-012-00 | ORNAMENT/ISEKI | * | | 1 | | | | |
| 7 | 1696-901-006-00 | ORNAMENT/STEERING | * | | 1 | | | | |

# FIG. 96 ORNAMENT(225F)

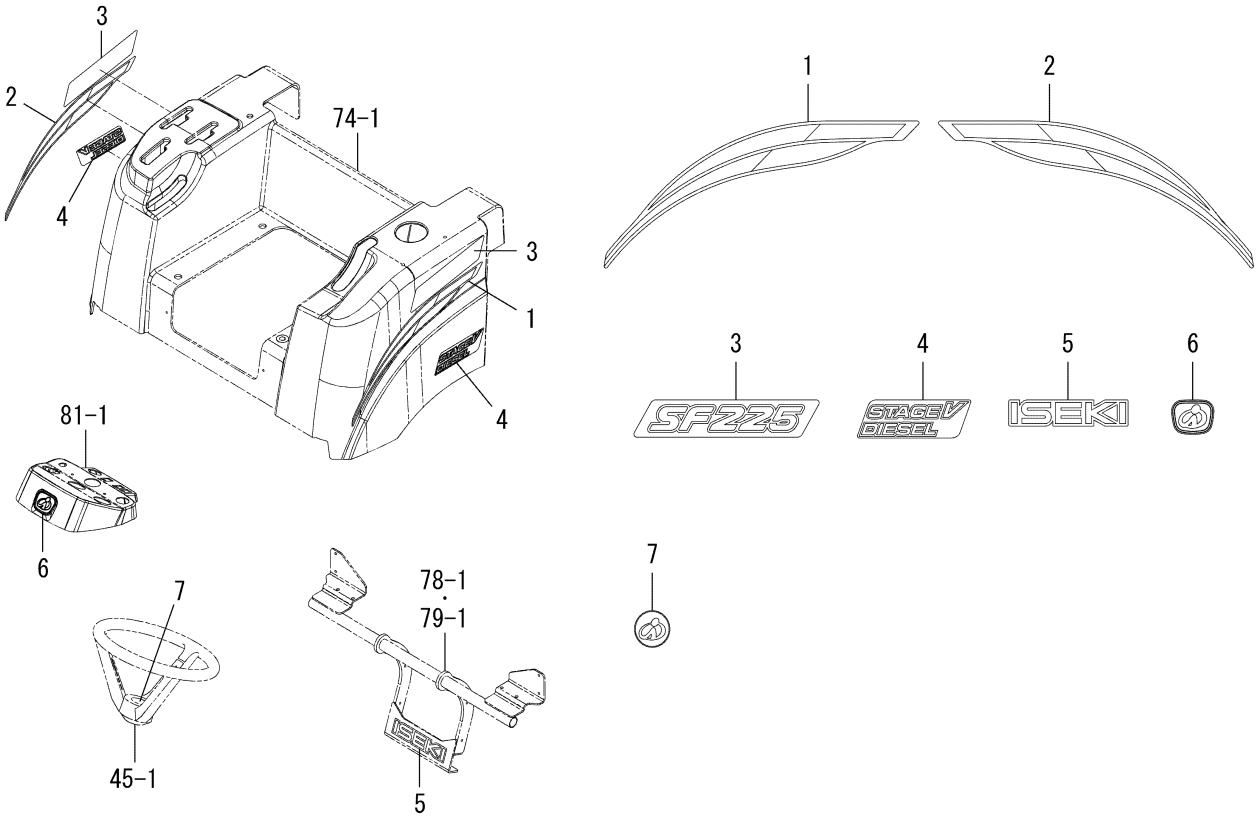


1832-901C-0100

| KEY | PART CODE | DESCRIPTION | SPC | TYPE OF MODEL | | ITC | COL | GRP | REMARKS |
|---|---|---|---|---|---|---|---|---|---|
| | | | | SF225F | SF237F | | | | |
| 1 | 1832-901-061-00 | MOLDING/FENDER/LH | * | 1 | | | | | |
| 2 | 1832-901-062-00 | MOLDING/FENDER/RH | * | 1 | | | | | |
| 3 | 1832-901-083-00 | ORNAMENT/225 | * | 2 | | | | | |
| 4 | 1809-901-064-00 | ORNAMENT/DIESEL | * | 2 | | | | | |
| 5 | 1716-901-016-00 | ORNAMENT/ISEKI | * | 1 | | | | | |
| 6 | 3533-901-012-00 | ORNAMENT/ISEKI | * | 1 | | | | | |
| 7 | 1696-901-006-00 | ORNAMENT/STEERING | * | 1 | | | | | |

# FIG. 97 LABEL(CONTROL)

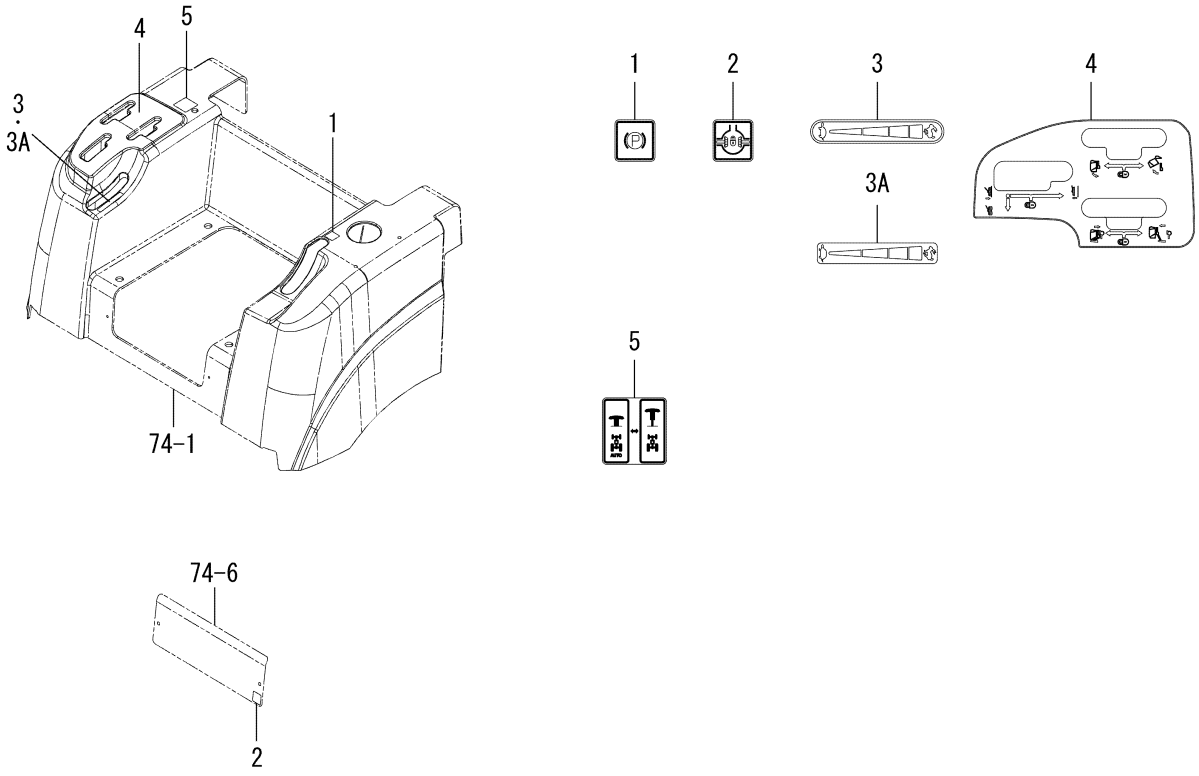


1832-902 -0100

| KEY | PART CODE | DESCRIPTION | SPC | TYPE OF MODEL | | ITC | COL | GRP | REMARKS |
|---|---|---|---|---|---|---|---|---|---|
| | | | | SF225F | SF237F | | | | |
| 1 | 1770-902-051-00 | LABEL/PARKING | * | 1 | 1 | | | | |
| 2 | 1770-902-004-00 | LABEL/DIFF | * | 1 | 1 | | | | |
| 3 | 1757-901-011-00 | LABEL/CONTROL/SHROTT | * | 1 -603 | 1 -907 | | | | |
| 3A | 1832-902-005-00 | LABEL/CONTROL/THROTT | * | 1 604- | 1 908- | | | | |
| 4 | 1832-902-001-10 | LABEL/CONTROL | * | 1 | 1 | | | | |
| 5 | 1832-902-002-10 | LABEL/4WD | * | 1 | 1 | | | | |

# FIG. 98 LABEL(CAUTION)(237F)

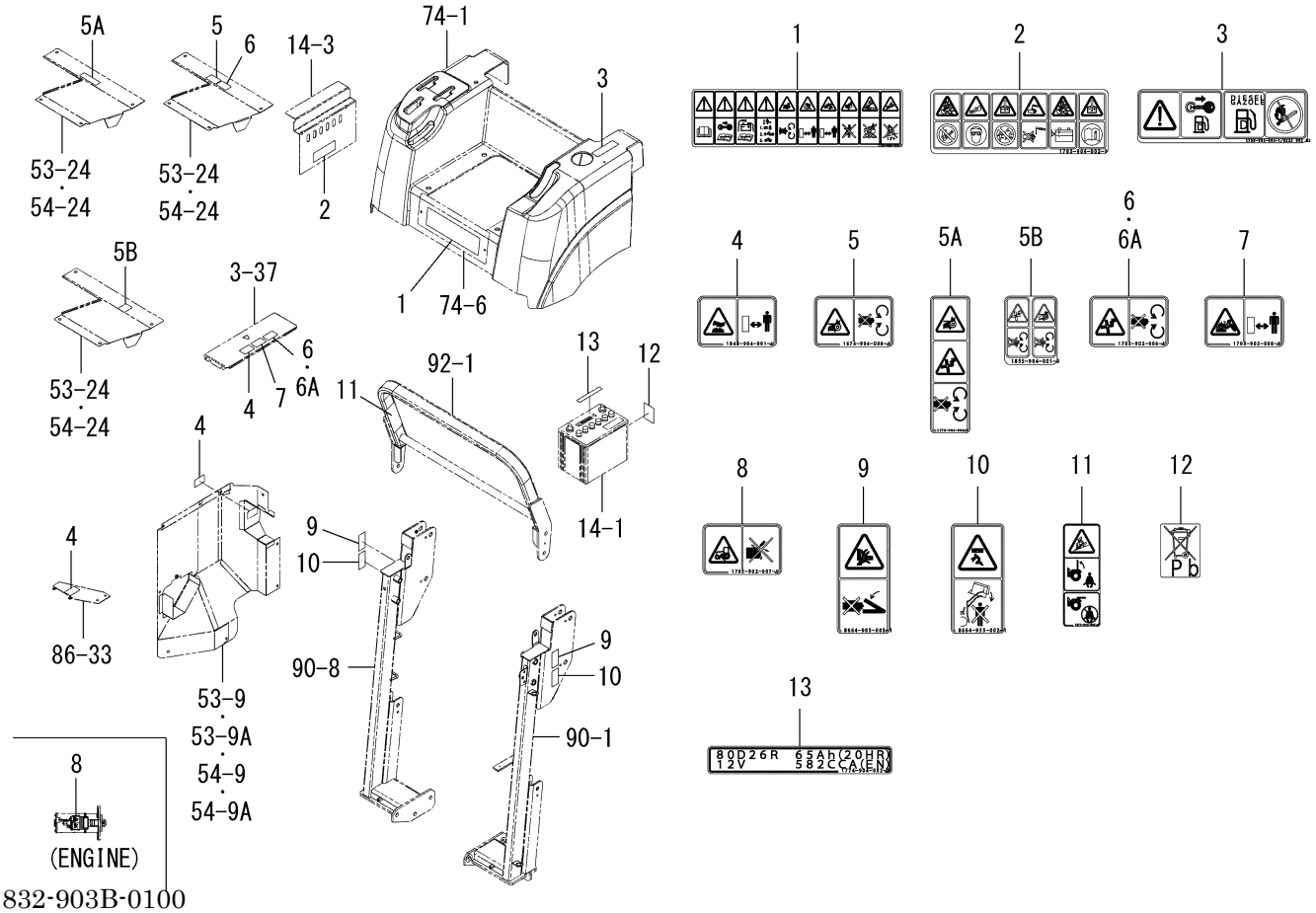


1832-903B-0100

| KEY | PART CODE | DESCRIPTION | SPC | TYPE OF MODEL | | ITC | COL | GRP | REMARKS |
|---|---|---|---|---|---|---|---|---|---|
| | | | | SF225F | SF237F | | | | |
| 1 | 1705-904-004-10 | LABEL/CAUTION | * | | 1 | | | | |
| 2 | 1705-904-002-30 | LABEL/BATTERY | * | | 1 | | | | |
| 3 | 1739-904-004-10 | LABEL/FUEL | * | | 1 | | | | |
| 4 | 1848-904-001-10 | LABEL/WARNING/HOT | * | | 3 | | | | |
| 5 | 1674-904-008-10 | LABEL/WARNING/BELT | * | | 1 -822 | | | | |
| 5A | 1776-904-002-10 | LABEL/WARNING/FAN/BE | * | | 1 -1213 | | | | |
| 5B | 1855-904-001-00 | LABEL/WARNING/FAN/BE | * | | 1 1214- | | | | |
| 6 | 1705-902-006-10 | LABEL/W/FAN | * | | 2 -822 | | | | |
| 6A | 1705-902-006-10 | LABEL/W/FAN | * | | 1 823- | | | | |
| 7 | 1705-902-008-10 | LABEL/W/RADIATOR | * | | 1 | | | | |
| 8 | 1705-902-007-10 | LABEL/W/STARTER | * | | 1 | | | | |
| 9 | 8664-905-003-10 | LABEL/CAUTION | * | | 2 | | | | |
| 10 | 8664-955-002-10 | LABEL/CAUTION/L | * | | 2 | | | | |
| 11 | 1674-904-005-20 | LABEL/ROPS | * | | 1 | | | | |
| 12 | 1817-904-004-00 | LABEL/BATTERY | * | | 1 -1237 | | | | |
| 13 | 1774-904-032-00 | LABEL/BATTERY/80D26R | * | | 1 -1237 | | | | |

# FIG. 99 LABEL(CAUTION)(225F)

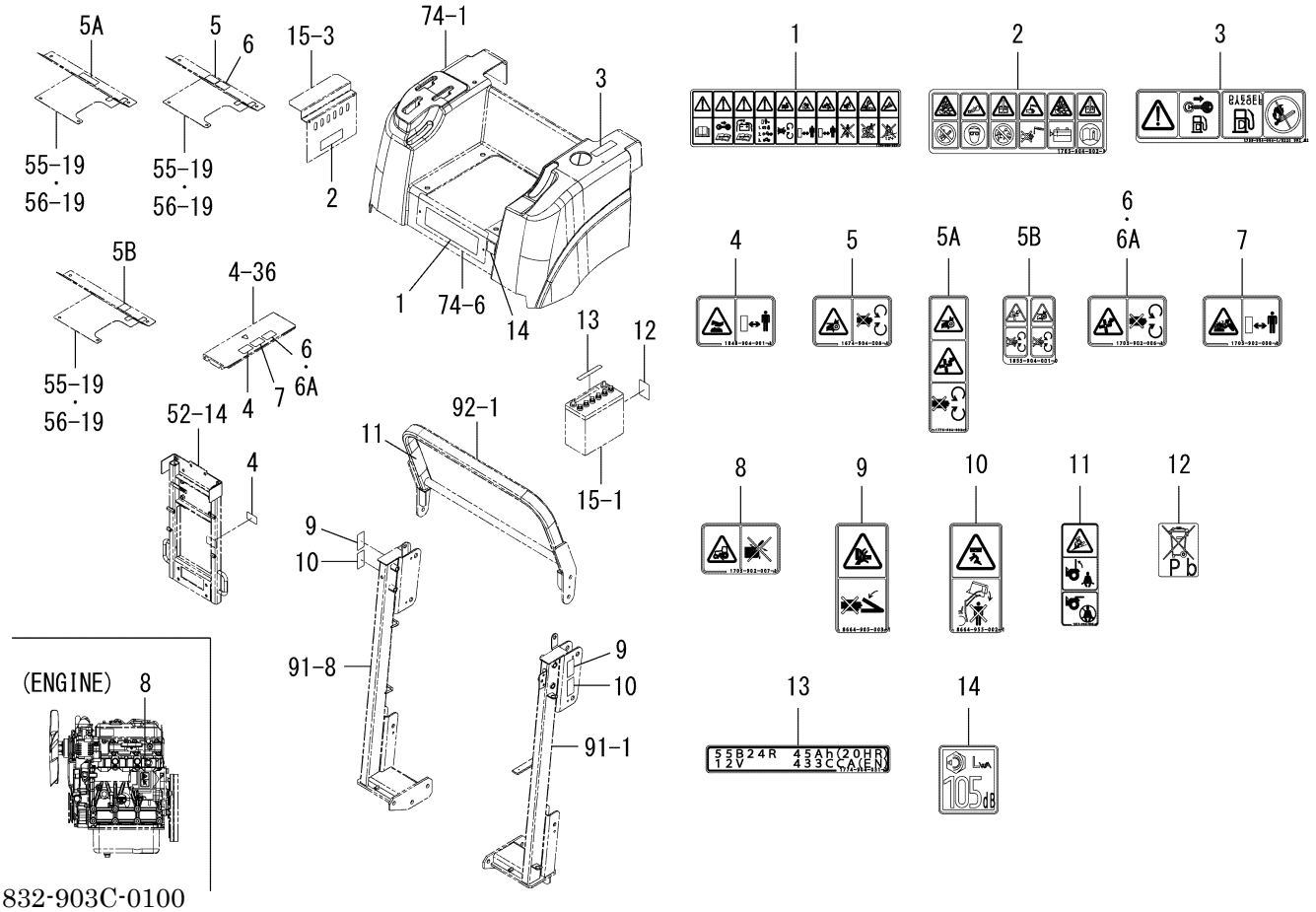


1832-903C-0100

| KEY | PART CODE | DESCRIPTION | SPC | TYPE OF MODEL | | ITC | COL | GRP | REMARKS |
|---|---|---|---|---|---|---|---|---|---|
| | | | | SF225F | SF237F | | | | |
| 1 | 1705-904-004-10 | LABEL/CAUTION | * | 1 | | | | | |
| 2 | 1705-904-002-30 | LABEL/BATTERY | * | 1 | | | | | |
| 3 | 1739-904-004-10 | LABEL/FUEL | * | 1 | | | | | |
| 4 | 1848-904-001-10 | LABEL/WARNING/HOT | * | 2 | | | | | |
| 5 | 1674-904-008-10 | LABEL/WARNING/BELT | * | 1 -533 | | | | | |
| 5A | 1776-904-002-10 | LABEL/WARNING/FAN/BE | * | 1 -840 | | | | | |
| 5B | 1855-904-001-00 | LABEL/WARNING/FAN/BE | * | 1 841- | | | | | |
| 6 | 1705-902-006-10 | LABEL/W/FAN | * | 2 -533 | | | | | |
| 6A | 1705-902-006-10 | LABEL/W/FAN | * | 1 534- | | | | | |
| 7 | 1705-902-008-10 | LABEL/W/RADIATOR | * | 1 | | | | | |
| 8 | 1705-902-007-10 | LABEL/W/STARTER | * | 1 | | | | | |
| 9 | 8664-905-003-10 | LABEL/CAUTION | * | 2 | | | | | |
| 10 | 8664-955-002-10 | LABEL/CAUTION/L | * | 2 | | | | | |
| 11 | 1674-904-005-20 | LABEL/ROPS | * | 1 | | | | | |
| 12 | 1817-904-004-00 | LABEL/BATTERY | * | 1 -862 | | | | | |
| 13 | 1774-904-031-10 | LABEL/BATTERY/55B24R | * | 1 -862 | | | | | |
| 14 | 1705-904-011-00 | LABEL/NOISE/LWA/105 | * | 1 | | | | | |

# FIG.100 LABEL(CE)(225F-NO.328-/237F-NO.579-)

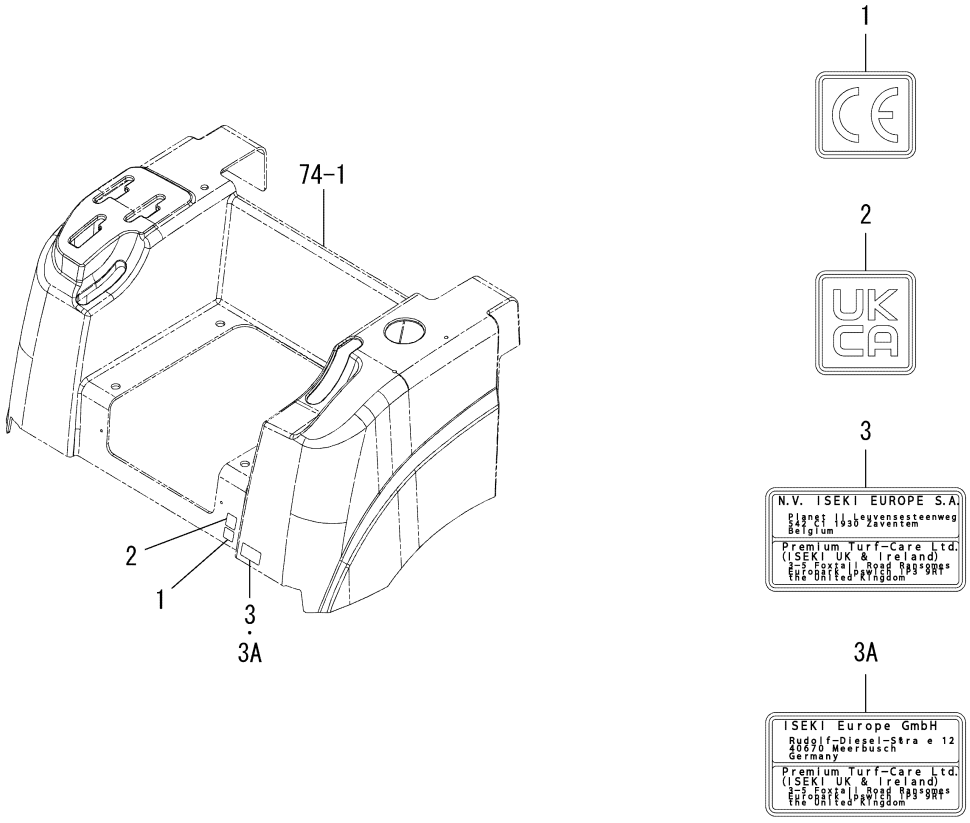


1832-904 -0100

| KEY | PART CODE | DESCRIPTION | SPC | TYPE OF MODEL | | ITC | COL | GRP | REMARKS |
|---|---|---|---|---|---|---|---|---|---|
| | | | | SF225F | SF237F | | | | |
| 1 | 2500-901-027-00 | LABEL/CE | * | 1 328- | 1 579- | | | | |
| 2 | 1832-904-061-00 | LABEL/UKCA | * | 1 328- | 1 579- | | | | |
| 3 | 1832-904-062-00 | LABEL/INFOMATION | * | 1 -603 | 1 -907 | | | | |
| 3A | 1832-904-062-10 | LABEL/INFOMATION | * | 1 604- | 1 908- | 1 | | | |

# FIG.101 LABEL(CE)(225F-NO.1-327/237F-NO.1-578)

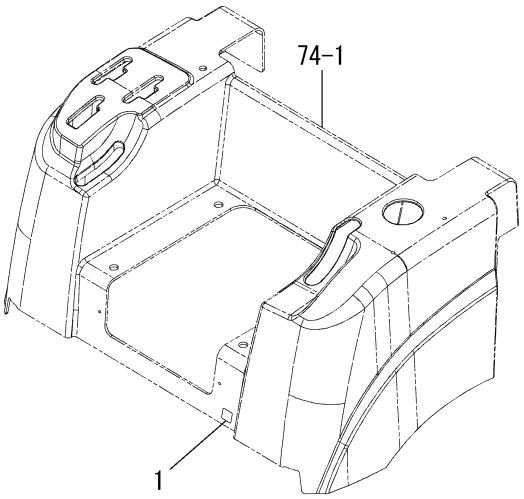


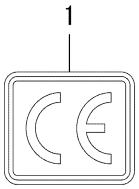


1709-905 -0100

| KEY | PART CODE | DESCRIPTION | SPC | TYPE OF MODEL | | ITC | COL | GRP | REMARKS |
|---|---|---|---|---|---|---|---|---|---|
| | | | | SF225F | SF237F | | | | |
| 1 | 2500-901-027-00 | LABEL/CE | * | 1 -327 | 1 -578 | | | | |

# FIG.102 MANUAL(225F-NO.866-/237F-NO.1237-)

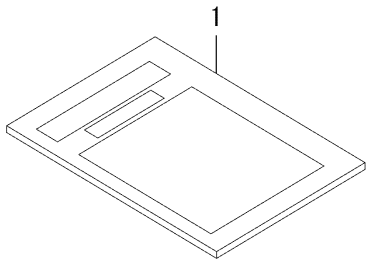


1815-912 -0100

| KEY | PART CODE | DESCRIPTION | SPC | TYPE OF MODEL | | ITC | COL | GRP | REMARKS |
|---|---|---|---|---|---|---|---|---|---|
| | | | | SF225F | SF237F | | | | |
| 1 | 1815-912-001-00 | MANUAL/INSTRUCTION | * | 1 866- | 1 1237- | | | | |
| | | | | | | | | | |
| | | | | | | | | | |
| | | | | |

# FIG.103 WEIGHT(REAR)SET SYSTEM (EXCEPT B TYPE-STANDARD/B TYPE-OPTION)

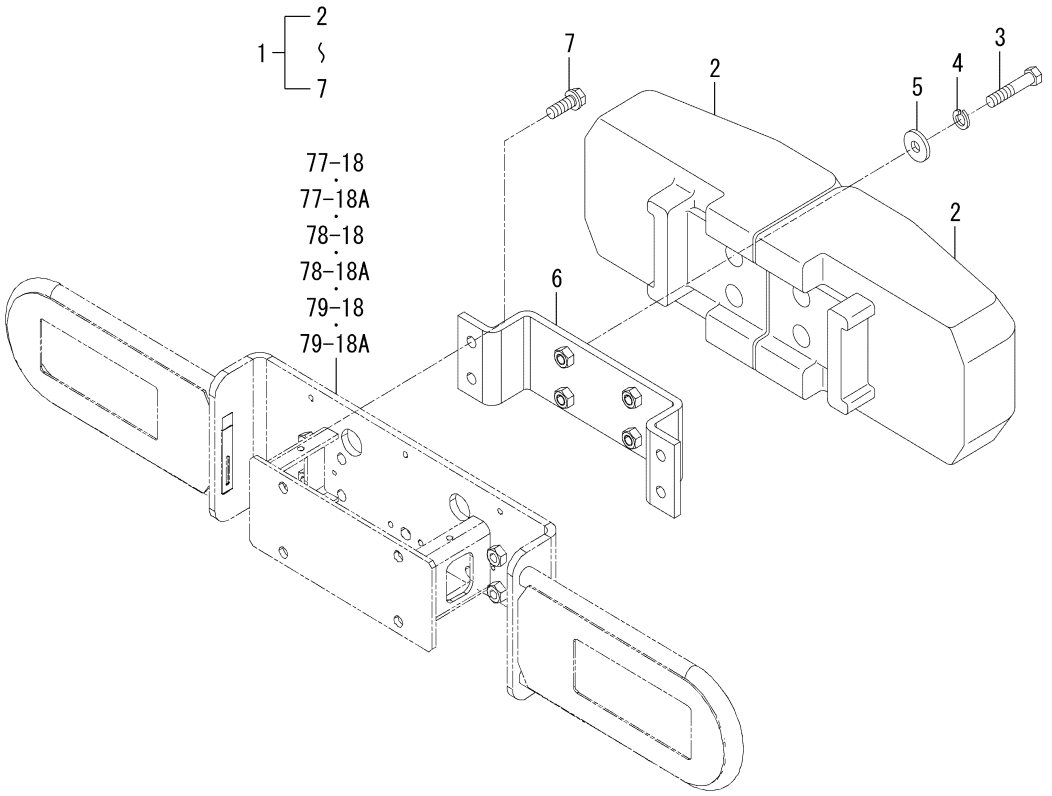


1832-923 -0100

| KEY | PART CODE | DESCRIPTION | SPC | TYPE OF MODEL | | ITC | COL | GRP | REMARKS |
|---|---|---|---|---|---|---|---|---|---|
| | | | | SF225F | SF237F | | | | |
| 1 | 1832-923-600-00 | WEIGHT/REAR SET | * | 1 | 1 | | | | |
| 2 | 1636-436-002-00 | WEIGHT/40 | * | 2 | 2 | | | | |
| 3 | V201-361-206-00 | BOLT/M12X60/7T | * | 4 | 4 | | | | |
| 4 | V401-160-012-00 | WASHER,SP/M12 | * | 4 | 4 | | | | |
| 5 | 3621-702-003-00 | WASHER,PULLEY | * | 4 | 4 | | | | |
| 6 | 1832-923-610-00 | BRACKET/WEIGHT COMP | * | 1 | 1 | | | | |
| 7 | 6901-931-235-00 | BOLT,SEMS/M12X35/7T | * | 4 | 4 | | | | |

# FIG.104 PLATE(BUMPER)•BOLT SYSTEM(OPTION)

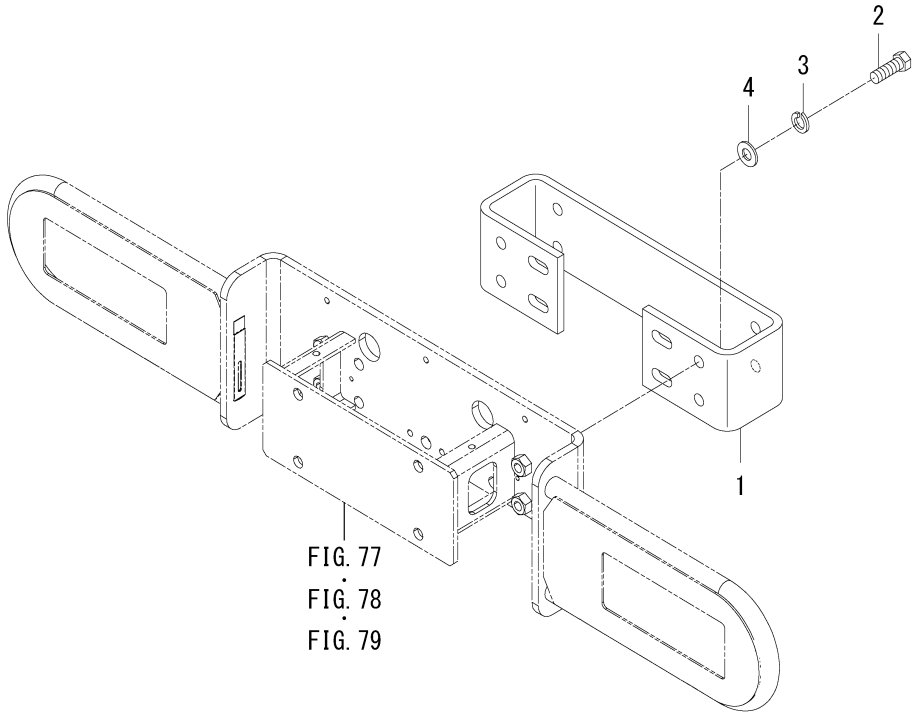


1728-410B-0100

| KEY | PART CODE | DESCRIPTION | SPC | TYPE OF MODEL | | ITC | COL | GRP | REMARKS |
|---|---|---|---|---|---|---|---|---|---|
| | | | | SF225F | SF237F | | | | |
| 1 | 1620-410-001-11 | PLATE/BUMPER | T | 1 | 1 | | 7F | | |
| 2 | V201-361-203-50 | BOLT/M12X35/7T | T | 4 | 4 | | | | |
| 3 | V401-160-012-00 | WASHER,SP/M12 | T | 4 | 4 | | | | |
| 4 | V411-260-012-00 | WASHER,PL/M12 | T | 4 | 4 | | | | |

# FIG.105 WEIGHT(15)SET(OPTION)

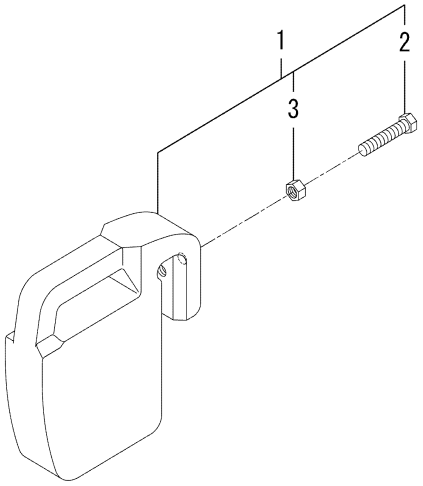


1771-922 -0100

| KEY | PART CODE | DESCRIPTION | SPC | TYPE OF MODEL | | ITC | COL | GRP | REMARKS |
|---|---|---|---|---|---|---|---|---|---|
| | | | | SF225F | SF237F | | | | |
| 1 | 1614-922-200-20 | WEIGHT/15 SET | T | 5 | 5 | | | | |
| 2 | W201-261-206-00 | BOLT/M12X60 | T | 5 | 5 | | | | |
| 3 | V305-260-012-00 | NUT/M12 | T | 5 | 5 | | | | |

# FIG.106 COMPONENT PARTS
# FOR K500-008-000-40 ON Fig.24

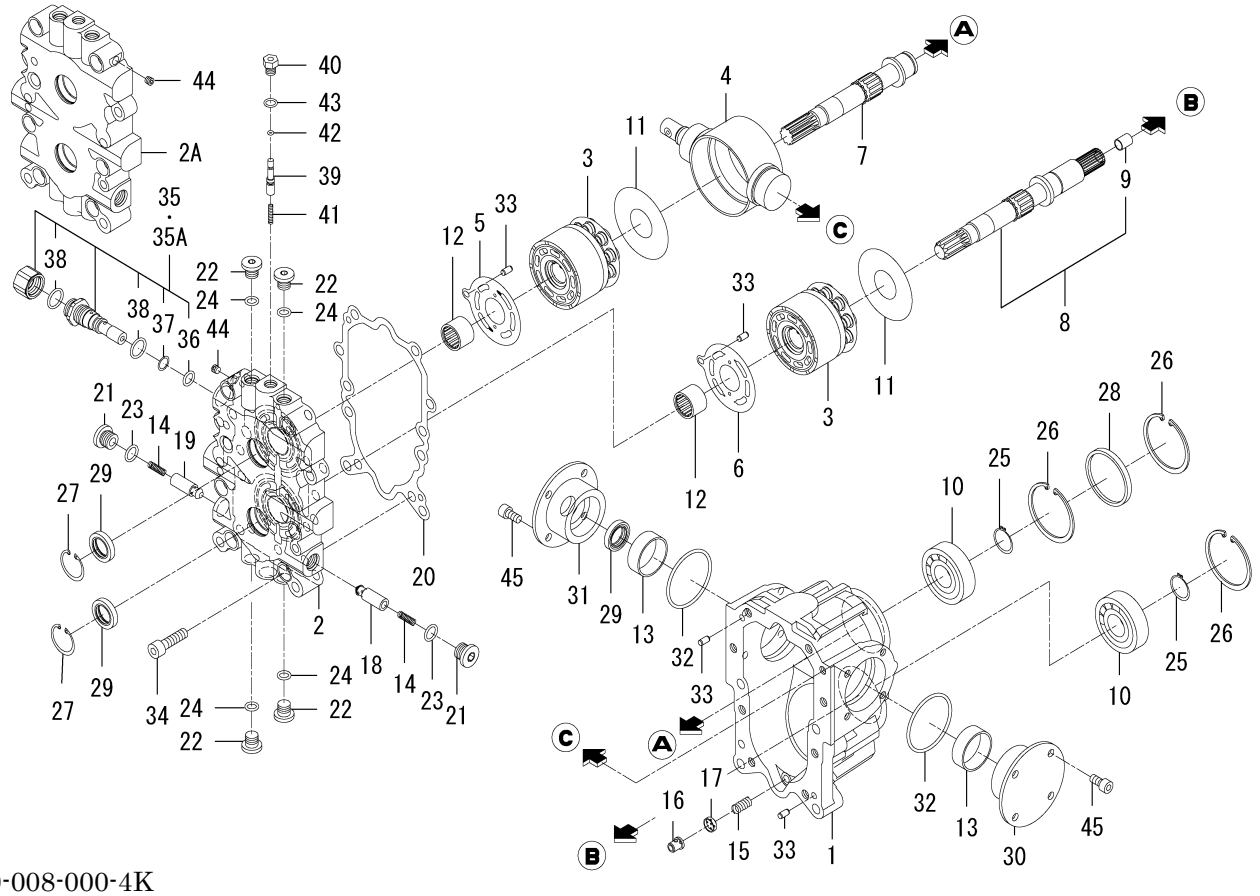


K500-008-000-4K

| KEY | PART CODE | DESCRIPTION | SPC | TYPE OF MODEL | | ITC | COL | GRP | REMARKS |
|---|---|---|---|---|---|---|---|---|---|
| | | | | SF225F | SF237F | | | | |
| 1 | K500-008-001-00 | CASE/HMP1/008 | * | 1 | 1 | | | | |
| 2 | K500-008-004-00 | BLOCK/PORT/HMP1/008 | * | 1 -343 | 1 -560 | | | | |
| 2A | K500-008-004-10 | BLOCK/PORT/HMP1/008 | * | 1 344- | 1 561- | 1 | | | |
| 3 | K500-006-300-10 | BLOCK/CYLINDER/HMP1 | * | 2 | 2 | | | | |
| 4 | K500-006-006-10 | PLATE/SWASH/HMP1/006 | * | 1 | 1 | | | | |
| 5 | K510-001-010-00 | PLATE/VALVE/PUMP | * | 1 | 1 | | | | |
| 6 | K510-001-011-00 | PLATE/VALVE/MOTOR | * | 1 | 1 | | | | |
| 7 | K500-008-012-00 | SHAFT/PUMP/HMP1/008 | * | 1 | 1 | | | | |
| 8 | K500-008-610-00 | SHAFT/MOTOR/008 SET | * | 1 | 1 | | | | |
| 9 | 1614-223-221-00 | BUSH/10X12X15 | * | 1 | 1 | | | | |
| 10 | V600-110-630-50 | BEARING,RB/6305 | * | 2 | 2 | | | | |
| 11 | K500-006-015-00 | PLATE/THRUST/HMP1/00 | * | 2 | 2 | | | | |
| 12 | K510-001-016-00 | NEEDLE | * | 2 | 2 | | | | |
| 13 | K500-006-017-00 | BUSH/40X44X15 | * | 2 | 2 | | | | |
| 14 | K510-001-020-00 | SPRING/HC030 | * | 2 | 2 | | | | |
| 15 | K510-003-021-00 | SPRING/HC021 | * | 1 | 1 | | | | |
| 16 | K510-003-022-00 | POPPET/RELIEF | * | 1 | 1 | | | | |
| 17 | K510-026-037-00 | GUIDE/SPRING | * | 1 | 1 | | | | |
| 18 | K510-005-023-00 | POPPET/CHECK/0.5 | * | 1 | 1 | | | | |
| 19 | K500-008-023-00 | POPPET/CHECK/0.9X2 | * | 1 | 1 | | | | |
| 20 | K500-008-026-00 | GASKET/HMP1/008 | * | 1 | 1 | | | | |
| 21 | K510-001-029-00 | PLUG(G3/8) | * | 2 | 2 | | | | |
| 22 | K275-001-003-00 | PLUG(PF1/4) | * | 4 | 4 | | | | |
| 23 | V720-112-401-40 | O-RING/1B,P14 | * | 2 | 2 | | | | |
| 24 | V720-112-401-10 | O-RING/1B,P11 | * | 4 | 4 | | | | |
| 25 | V704-140-025-00 | RING,SNAP/25 C | * | 2 | 2 | | | | |
| 26 | 1710-241-053-00 | RING/SNAP/R62 | * | 3 | 3 | | | | |
| 27 | V705-140-032-00 | RING,SNAP/32 C | * | 2 | 2 | | | | |
| 28 | 3640-547-007-00 | PLUG,CAP/62X6 | * | 1 | 1 | | | | |
| 29 | K510-001-039-00 | OIL SEAL | * | 3 | 3 | | | | |

# FIG.106 COMPONENT PARTS FOR K500-008-000-40 ON Fig.24

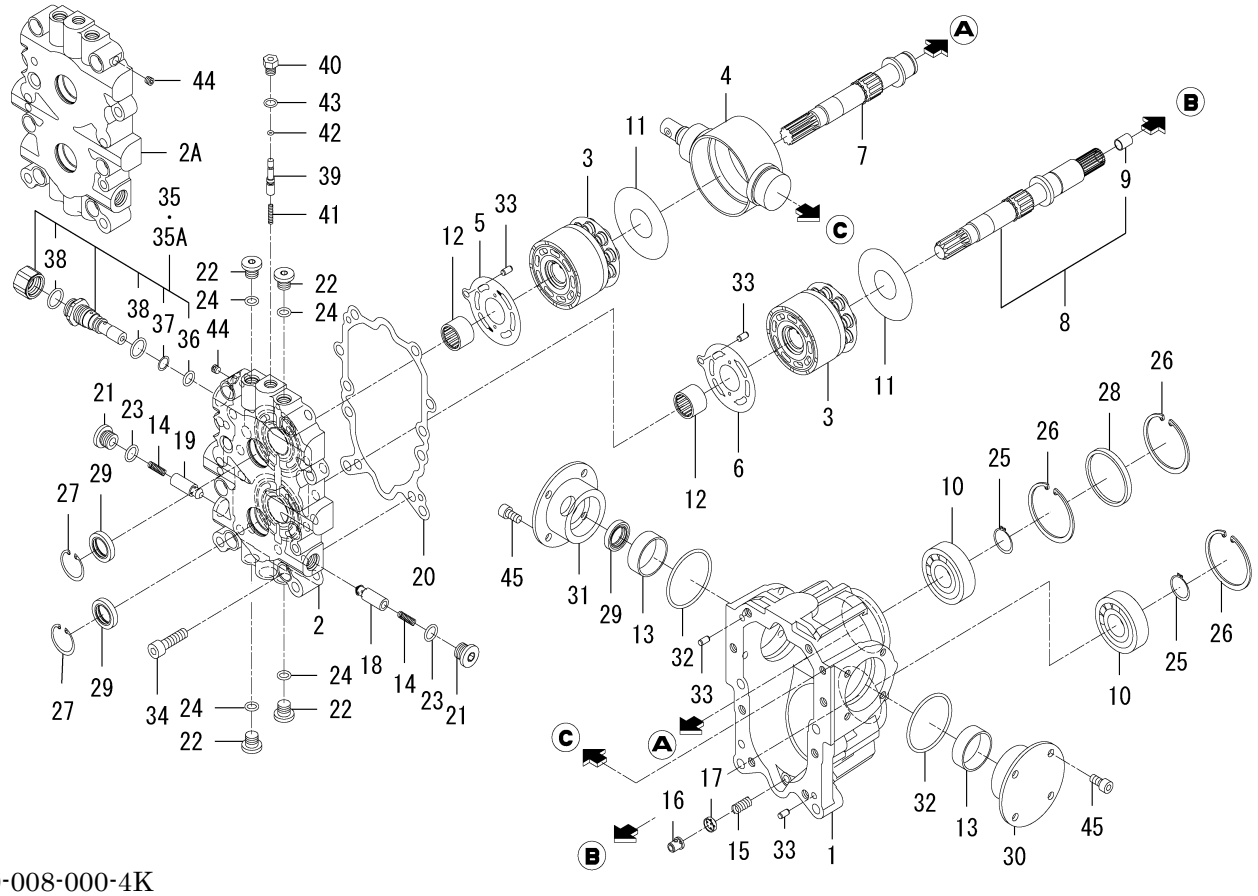


K500-008-000-4K

| KEY | PART CODE | DESCRIPTION | SPC | TYPE OF MODEL | | ITC | COL | GRP | REMARKS |
|---|---|---|---|---|---|---|---|---|---|
| | | | | SF225F | SF237F | | | | |
| 30 | K500-008-034-00 | COVER/BUSH/HMP1/008 | * | 1 | 1 | | | | |
| 31 | K500-008-035-00 | COVER/TRUNNION/HMP1/ | * | 1 | 1 | | | | |
| 32 | V721-103-106-00 | O-RING/1A,G60 | * | 2 | 2 | | | | |
| 33 | K510-001-036-00 | PIN,ST | * | 4 | 4 | | | | |
| 34 | V220-541-003-50 | SCREW,SOCKET/M10X35 | * | 8 | 8 | | | | |
| 35 | K500-008-100-20 | VALVE/RELIEF/320 | * | 1 -240 | 1 -525 | | | | |
| 35A | K500-008-100-30 | VALVE/RELIEF/32 SET | * | 1 241- | 1 526- | 1 | | | |
| 36 | V720-112-401-20 | O-RING/1B,P12 | * | 1 | 1 | | | | |
| 37 | V730-101-601-20 | RING/BACK UP | * | 1 | 1 | | | | |
| 38 | V720-112-401-80 | O-RING/1B,P18 | * | 2 | 2 | | | | |
| 39 | K510-003-301-00 | SPOOL | * | 1 | 1 | | | | |
| 40 | K510-018-302-00 | PLUG/M12X1.25 | * | 1 | 1 | | | | |
| 41 | K510-003-303-00 | SPRING/HC023 | * | 1 | 1 | | | | |
| 42 | K510-003-304-00 | O-RING | * | 1 | 1 | | | | |
| 43 | V720-111-901-00 | O-RING/1B,P10 | * | 1 | 1 | | | | |
| 44 | V780-140-000-1T | PLUG/SCREW/SEAL | * | 1 | 1 | | | | |
| 45 | K500-007-039-00 | SCREW/SOCKET/M8X16 | * | 8 | 8 | | | | |

# FIG.107 COMPONENT PARTS FOR 1672-105-210-10 ON Fig.10

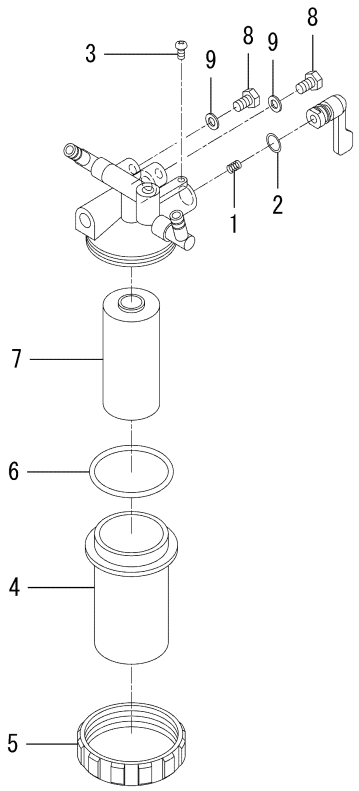


1672-105-210-1E

| KEY | PART CODE | DESCRIPTION | SPC | TYPE OF MODEL | | ITC | COL | GRP | REMARKS |
|---|---|---|---|---|---|---|---|---|---|
| | | | | SF225F | SF237F | | | | |
| 1 | 1415-102-007-00 | SPRING,VALVE | * | 1 | | | | | |
| 2 | V720-102-401-00 | O-RING/1A,P10A | * | 1 | | | | | |
| 3 | 1415-102-008-00 | VIS | * | 1 | | | | | |
| 4 | 1440-103-201-00 | CAP | * | 1 | | | | | |
| 5 | 1444-102-204-00 | NUT,RING | * | 1 | | | | | |
| 6 | V720-103-504-40 | O-RING/1A,P44 | * | 1 | | | | | |
| 7 | 1672-105-211-00 | ELEMENT | * | 1 | | | | | |
| 8 | 1572-102-003-00 | BOLT/M06X08/APSET | * | 2 | | | | | |
| 9 | 1415-102-013-00 | PACKING | * | 2 | | | | | |

# FIG.108 COMPONENT PARTS FOR 1720-221-210-00 ON Fig.59,60

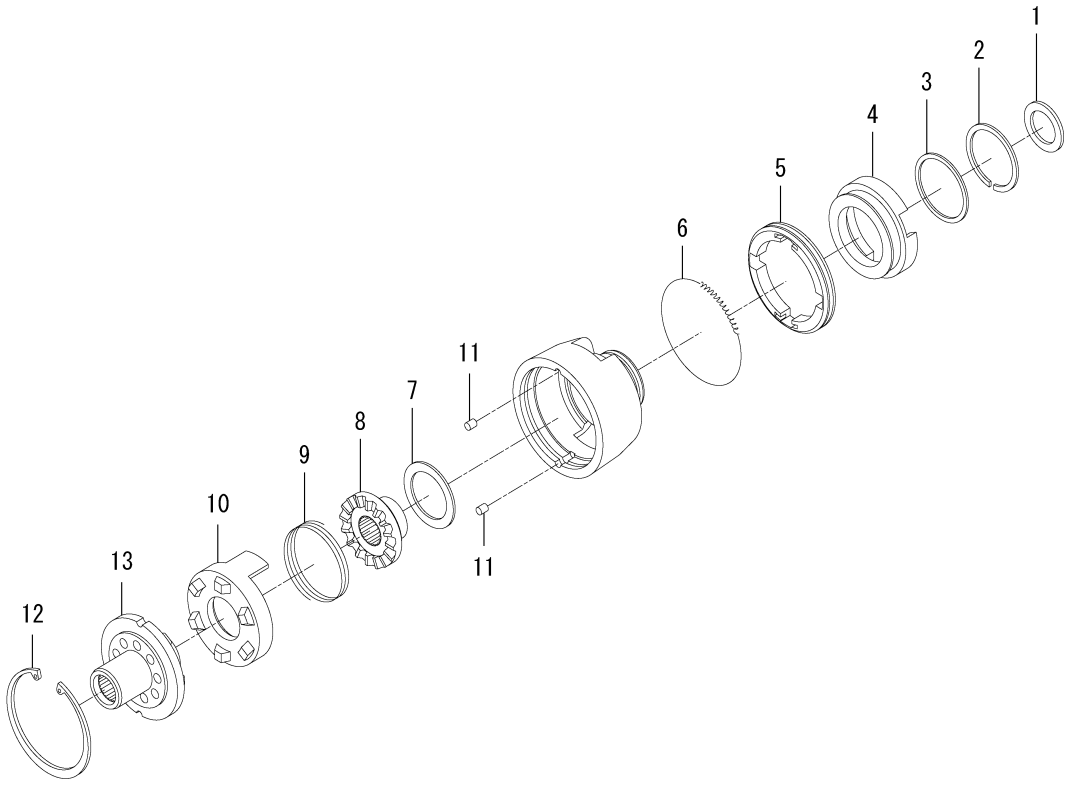


1720-221-210-0

| KEY | PART CODE | DESCRIPTION | SPC | TYPE OF MODEL | | ITC | COL | GRP | REMARKS |
|---|---|---|---|---|---|---|---|---|---|
| | | | | SF225F | SF237F | | | | |
| 1 | 1720-221-211-00 | WASHER | * | 1 | 1 | | | | |
| 2 | 1720-221-212-00 | RING/SNAP/A | * | 1 | 1 | | | | |
| 3 | 1720-221-213-00 | WASHER/A | * | 1 | 1 | | | | |
| 4 | 1720-221-214-00 | RING/BRAKE | * | 1 | 1 | | | | |
| 5 | 1720-221-215-00 | SHOE/BRAKE | * | 4 | 4 | | | | |
| 6 | 1720-221-216-00 | SPRING | * | 1 | 1 | | | | |
| 7 | 1720-221-217-00 | BUSH | * | 1 | 1 | | | | |
| 8 | 1720-221-218-00 | CAM/DRIVEN | * | 1 | 1 | | | | |
| 9 | 1720-221-219-00 | SPRING/A | * | 1 | 1 | | | | |
| 10 | 1720-221-221-00 | CAM/CENTER | * | 1 | 1 | | | | |
| 11 | 1720-221-222-00 | PIN/STRAIGHT | * | 2 | 2 | | | | |
| 12 | 1720-221-224-00 | RING/SNAP/B | * | 1 | 1 | | | | |
| 13 | 1720-221-225-00 | CAM/DRAIVE | * | 1 | 1 | | | | |

# FIG.109 COMPONENT PARTS
# FOR 1725-219-720-20 ON Fig.33,34

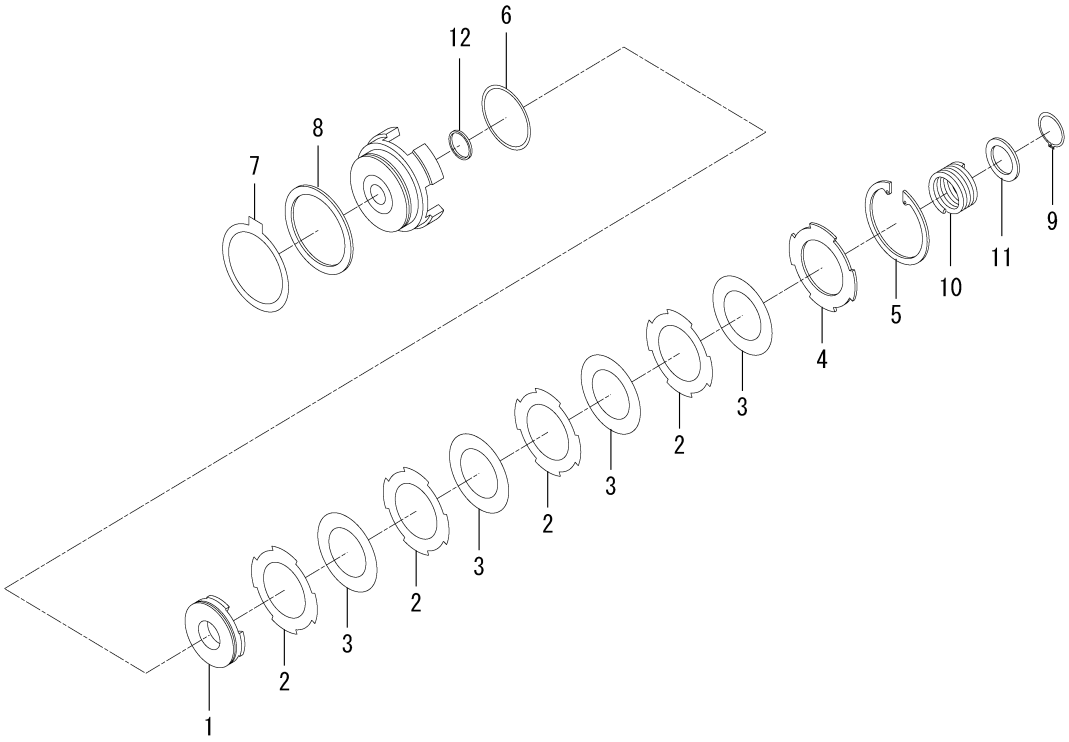


1725-219-720-2C

| KEY | PART CODE | DESCRIPTION | SPC | TYPE OF MODEL | | ITC | COL | GRP | REMARKS |
|---|---|---|---|---|---|---|---|---|---|
| | | | | SF225F | SF237F | | | | |
| 1 | 1725-219-722-00 | PISTON | * | 1 | 1 | | | | |
| 2 | 1725-219-723-10 | PLATE/DISC | * | 4 | 4 | | | | |
| 3 | 1725-219-724-00 | PLATE/SEPARATER | * | 4 | 4 | | | | |
| 4 | 1725-219-725-00 | PLATE/BACK | * | 1 | 1 | | | | |
| 5 | 1725-219-726-00 | RING/SNAP | * | 1 | 1 | | | | |
| 6 | 1725-219-727-00 | RING/SEAL | * | 1 | 1 | | | | |
| 7 | 1725-219-728-00 | DISC/BRAKE | * | 1 | 1 | | | | |
| 8 | 1725-219-729-00 | PLATE/BRAKE | * | 1 | 1 | | | | |
| 9 | 1725-219-731-00 | RING/SNAP | * | 1 | 1 | | | | |
| 10 | 1725-219-732-00 | SPRING | * | 1 | 1 | | | | |
| 11 | 1725-219-733-00 | WASHER | * | 1 | 1 | | | | |
| 12 | 1725-219-734-00 | RING/O | * | 1 | 1 | | | | |

# FIG.110 COMPONENT PARTS
# FOR 1772-654-210-00 ON Fig.77,78,79

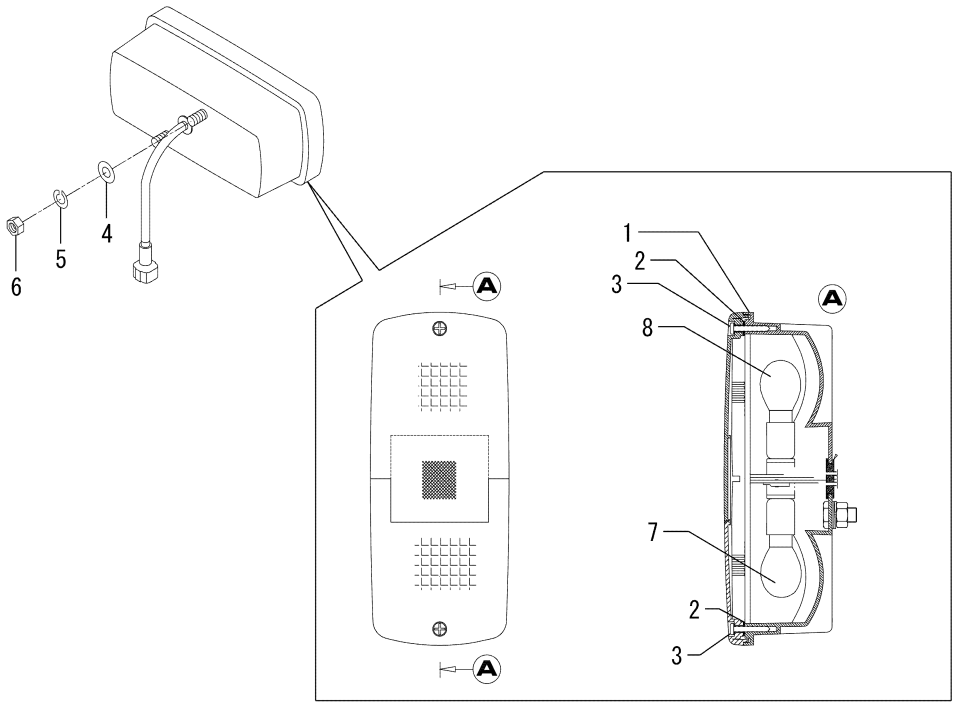


1772-654-210-0B

| KEY | PART CODE | DESCRIPTION | SPC | TYPE OF MODEL | | ITC | COL | GRP | REMARKS |
|---|---|---|---|---|---|---|---|---|---|
| | | | | SF225F | SF237F | | | | |
| 1 | 1772-654-212-00 | GASKET | * | 2 | 2 | | | | |
| 2 | 1772-654-213-00 | WASHER/RUBBER | * | 4 | 4 | | | | |
| 3 | 1772-654-215-00 | WASHER | * | 4 | 4 | | | | |
| 4 | V411-260-008-00 | WASHER,PL/M8 | * | 4 | 4 | | | | |
| 5 | V401-160-008-00 | WASHER,SP/M8 | * | 4 | 4 | | | | |
| 6 | V304-260-008-00 | NUT/M8 | * | 4 | 4 | | | | |
| 7 | 1772-654-216-00 | BULB/12V21W | * | 2 | 2 | | | | |
| 8 | 1772-654-217-00 | BULB/12V21/5W | * | 2 | 2 | | | | |

# FIG.111 COMPONENT PARTS FOR 1825-127-300-00 ON Fig.32

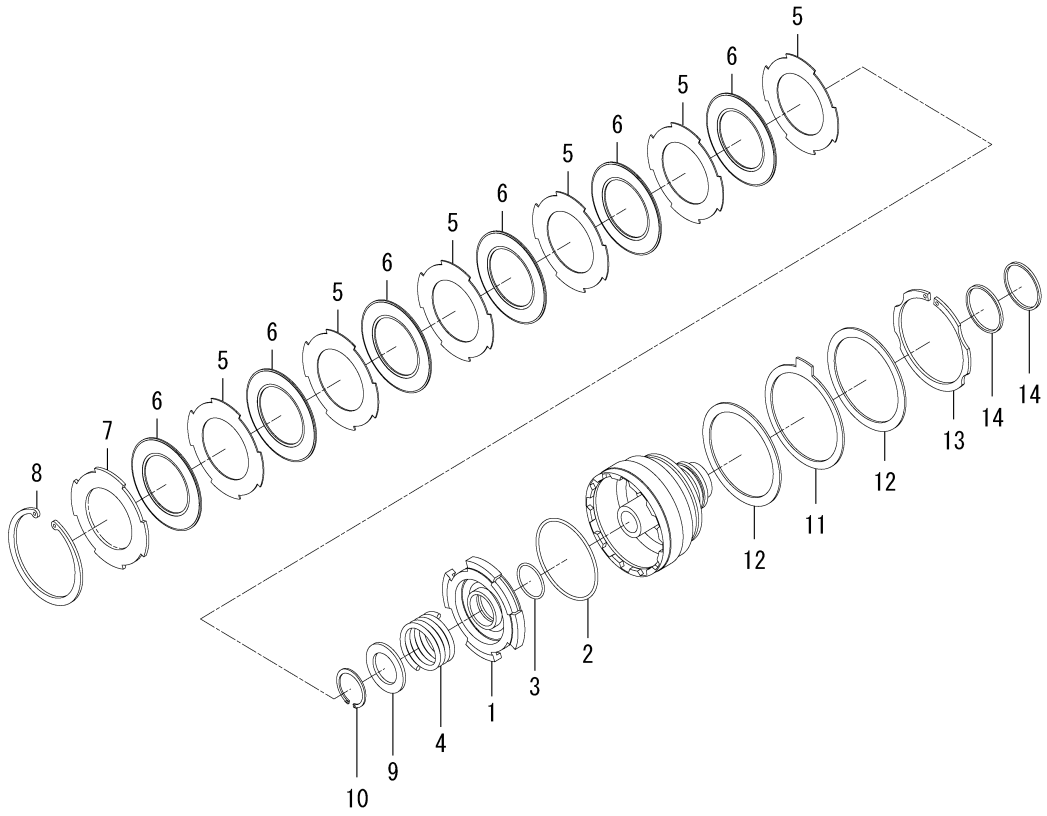


1825-127-300-0F

| KEY | PART CODE | DESCRIPTION | SPC | TYPE OF MODEL | | ITC | COL | GRP | REMARKS |
|---|---|---|---|---|---|---|---|---|---|
| | | | | SF225F | SF237F | | | | |
| 1 | 1825-127-302-00 | PISTON | * | 1 | 1 | | | | |
| 2 | 1825-127-303-00 | RING/O | * | 1 | 1 | | | | |
| 3 | 1825-127-304-00 | RING/O | * | 1 | 1 | | | | |
| 4 | 1688-211-505-00 | SPRING | * | 1 | 1 | | | | |
| 5 | 1725-219-232-00 | PLATE/SEPARATER | * | 6 | 6 | | | | |
| 6 | 1725-219-215-00 | PLATE/DISK | * | 6 | 6 | | | | |
| 7 | 1725-219-216-00 | PLATE/BACK | * | 1 | 1 | | | | |
| 8 | 1688-211-506-00 | SNAPRING | * | 1 | 1 | | | | |
| 9 | 1825-127-305-00 | WASHER | * | 1 | 1 | | | | |
| 10 | V704-140-030-00 | RING,SNAP/30 C | * | 1 | 1 | | | | |
| 11 | 1688-211-509-00 | DISK/BRAKE | * | 1 | 1 | | | | |
| 12 | 1825-127-307-00 | PRESSURE/BRAKE | * | 2 | 2 | | | | |
| 13 | 1688-211-522-00 | SNAPRING/85 | * | 1 | 1 | | | | |
| 14 | 1825-127-306-00 | SEAL/RING/45X03 | * | 2 | 2 | | | | |

# WIRING DIAGRAM(SF225 TYPE)(1/2)

## (SF225 TYPE)

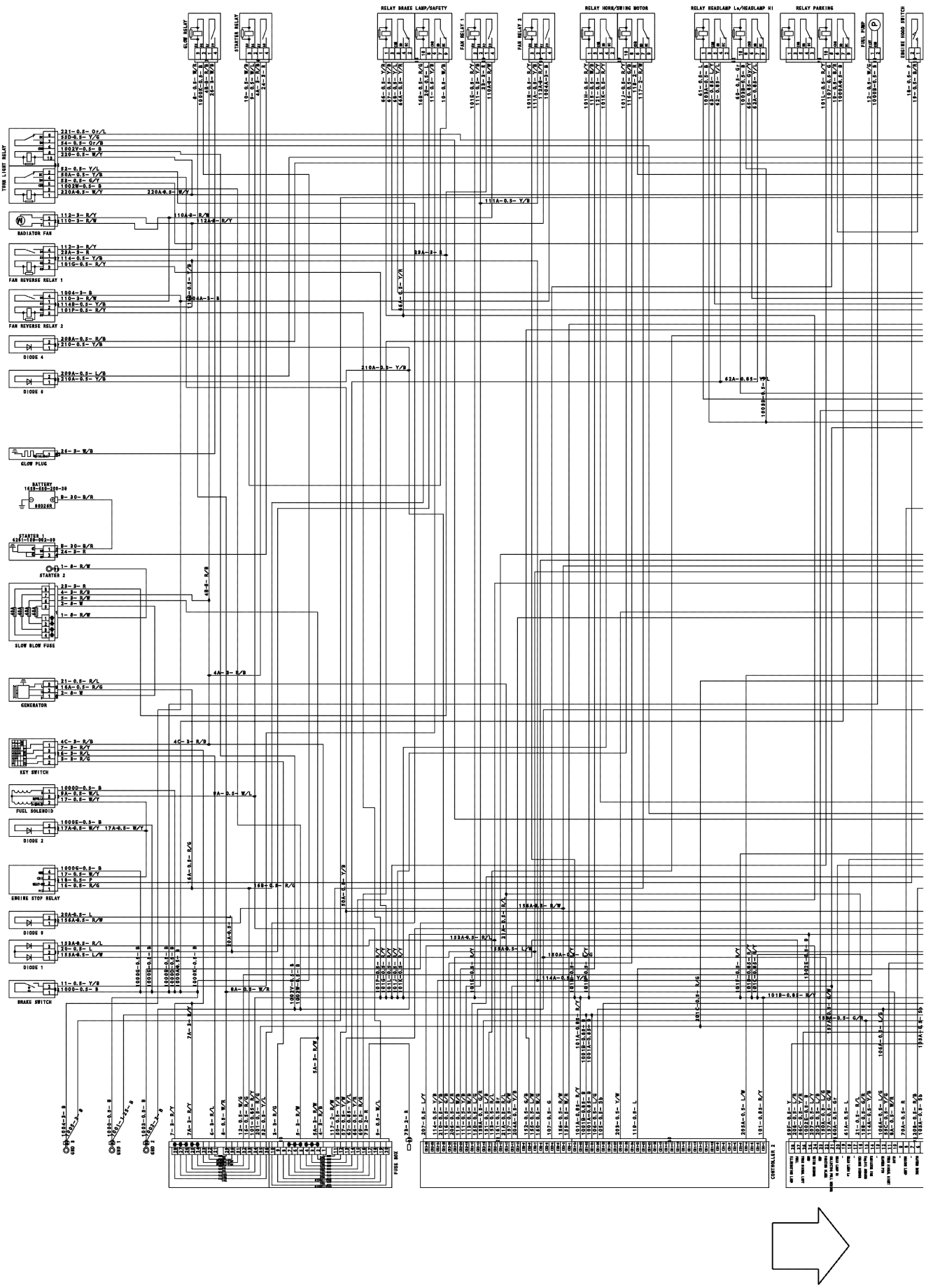

# WIRING DIAGRAM(SF225 TYPE)(2/2)

## (SF225 TYPE)

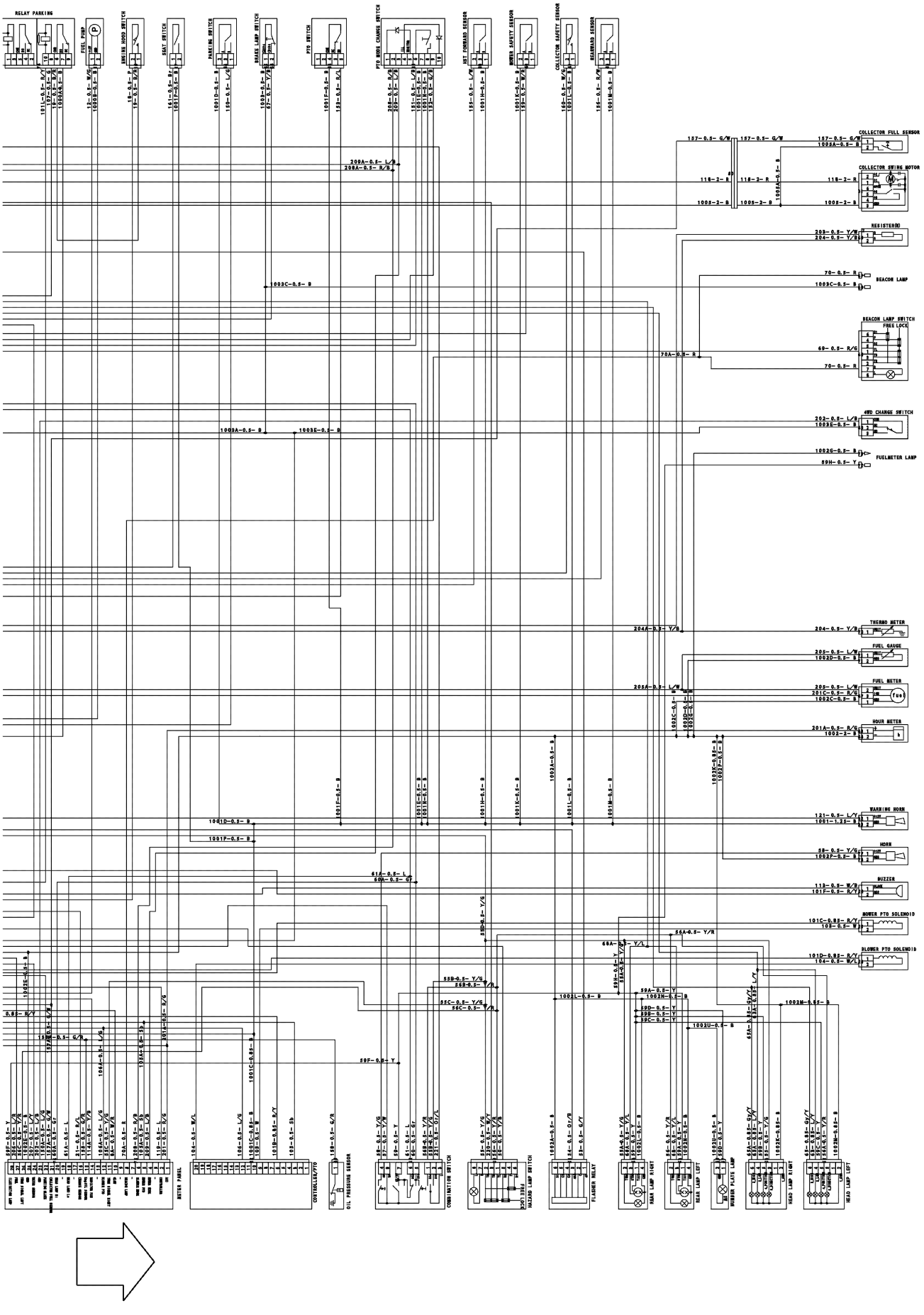

# Numerical Index



| Part Code | Fig. | Key |
|---|---|---|
| 1373-121-001-00 | 25 | 4 |
| 1425-621-004-00 | 6 | 31 |
| | 10 | 14 |
| 1600-624-004-10 | 26 | 3 |
| 1729-202-001-00 | 21 | 14 |
| 3625-540-004-00 | 10 | 36 |
| 3640-586-004-00 | 22 | 4 |
| 3805-355-002-20 | 8 | 2 |
| 3817-401-001-00 | 10 | 10 |
| | 12 | 20 |
| | 18 | 4 |
| | 18 | 9 |
| | 21 | 9 |
| 6004-010-170-00 | 1 | 1 |
| 6209-000-002-00 | 12 | 18 |
| 6209-000-004-10 | 6 | 2 |
| 6209-000-043-00 | 16 | 9 |
| 6209-000-044-00 | 2 | 7 |
| 6209-030-043-00 | 21 | 18 |
| 6209-030-092-00 | 19 | 5 |
| 6209-046-015-00 | 16 | 7 |
| 6209-050-001-00 | 10 | 33 |
| 6209-050-002-00 | 10 | 34 |
| 6209-300-014-00 | 2 | 8 |
| 6209-360-011-00 | 22 | 3 |
| 6209-360-028-20 | 3 | 6 |
| 6209-360-143-00 | 22 | 6 |
| 6209-409-003-00 | 12 | 17 |
| 6209-440-007-00 | 25 | 6 |
| 6209-490-002-10 | 3 | 4 |
| 6209-490-006-00 | 10 | 19 |
| 6209-500-003-00 | 10 | 16 |
| | 10 | 25 |
| | 28 | 23 |
| 6209-572-003-00 | 3 | 5 |
| | 28 | 5 |
| 6209-580-002-10 | 21 | 27 |
| 6209-587-001-00 | 14 | 4 |
| 6209-600-004-00 | 10 | 24 |
| 6209-605-004-10 | 2 | 3 |
| 6209-605-007-10 | 6 | 5 |
| | 10 | 2 |
| | 10 | 2-A |
| 6209-610-001-10 | 6 | 3 |
| 6209-610-007-00 | 10 | 3 |
| 6209-610-008-00 | 6 | 7 |
| 6209-610-009-00 | 6 | 4 |
| 6209-625-001-00 | 6 | 14 |
| | 28 | 10 |
| 6209-625-002-00 | 10 | 7 |
| | 28 | 12 |
| 6209-730-002-00 | 16 | 4 |
| 6209-730-005-00 | 13 | 3 |
| | 21 | 12 |
| 6209-740-001-00 | 10 | 26 |
| 6209-740-005-00 | 6 | 17 |
| 6209-749-001-30 | 6 | 15 |
| | 10 | 42 |
| 6209-920-002-00 | 10 | 20 |
| | 17 | 9 |
| | 28 | 13 |
| 6209-940-004-00 | 12 | 14 |
| 6211-110-114-00 | 2 | 1 |
| 6211-110-114-10 | 2 | 1-A |
| 6211-141-029-20 | 2 | 6 |
| | 28 | 3 |
| 6211-170-004-20 | 3 | 1 |
| 6211-173-003-00 | 3 | 3 |
| | 28 | 4 |
| 6211-210-113-10 | 6 | 1 |
| 6211-210-113-20 | 6 | 1-A |
| 6211-210-113-30 | 6 | 1-B |
| 6211-258-001-00 | 6 | 8 |
| | 28 | 8 |
| 6211-258-002-00 | 6 | 9 |
| | 28 | 9 |
| 6211-291-038-00 | 6 | 25 |
| 6211-292-009-00 | 6 | 26 |
| | 28 | 11 |
| 6211-310-025-70 | 10 | 1 |
| 6211-310-120-00 | 10 | 1-A |
| 6211-310-120-10 | 10 | 1-B |
| 6211-311-007-40 | 10 | 37 |
| 6211-312-003-20 | 10 | 27 |
| | 28 | 14 |
| 6211-312-004-20 | 10 | 38 |
| | 28 | 15 |
| 6211-312-032-00 | 26 | 7 |
| | 28 | 22 |
| 6211-319-032-00 | 10 | 40 |
| 6211-321-022-00 | 10 | 48 |
| 6211-322-002-00 | 10 | 49 |
| 6211-341-081-10 | 9 | 1 |
| 6211-342-001-30 | 9 | 2 |
| 6211-361-104-00 | 8 | 1 |
| 6211-510-021-00 | 6 | 10 |
| 6211-511-023-00 | 6 | 11 |
| 6211-511-024-00 | 6 | 12 |
| 6211-540-018-00 | 7 | 1 |
| 6211-560-007-00 | 7 | 3 |
| 6211-599-012-00 | 6 | 13 |
| | 7 | 2 |
| | 7 | 4 |
| 6211-751-001-10 | 3 | 2 |
| 6211-760-035-20 | 6 | 29 |
| 6211-766-025-00 | 6 | 30 |
| 6211-777-007-30 | 11 | 1 |
| 6212-111-094-20 | 14 | 1 |
| 6212-114-094-20 | 15 | 1 |
| 6212-116-094-20 | 15 | 3 |
| 6212-121-014-20 | 14 | 2 |
| 6212-124-014-10 | 15 | 2 |
| 6212-126-014-10 | 15 | 4 |
| 6212-211-001-10 | 14 | 3 |
| 6212-230-004-10 | 14 | 5 |
| 6212-235-005-10 | 14 | 6 |
| 6212-271-016-00 | 14 | 7 |
| 6212-274-016-00 | 7 | 5 |
| 6212-276-016-00 | 7 | 6 |
| 6212-310-057-00 | 16 | 1 |
| 6212-330-083-10 | 16 | 5 |
| 6212-333-009-00 | 16 | 6 |
| 6212-371-081-00 | 16 | 8 |
| 6212-511-002-00 | 13 | 1 |
| 6212-521-008-10 | 16 | 3 |
| 6212-522-010-00 | 13 | 2 |
| 6212-523-023-00 | 13 | 6 |
| 6212-524-002-40 | 21 | 11 |
| 6212-530-022-00 | 10 | 44 |
| 6212-531-014-00 | 6 | 6 |
| 6212-535-010-10 | 21 | 15 |
| 6212-535-014-00 | 13 | 4 |
| 6212-551-028-00 | 12 | 1 |
| 6212-552-014-00 | 12 | 2 |
| 6212-561-001-10 | 12 | 3 |

# Numerical Index



| Part Code | Fig. | Key |
|---|---|---|
| 6212-563-005-00 | 12 | 4 |
| 6212-565-001-00 | 12 | 5 |
| 6212-569-002-00 | 2 | 4 |
| | 28 | 2 |
| 6212-571-006-00 | 12 | 6 |
| 6212-575-002-00 | 12 | 7 |
| 6212-600-002-30 | 12 | 8 |
| 6212-600-002-40 | 12 | 8-A |
| 6212-611-004-10 | 12 | 9 |
| 6212-611-004-20 | 12 | 9-A |
| 6212-616-002-00 | 12 | 16 |
| 6212-620-001-20 | 12 | 10 |
| 6212-626-002-10 | 12 | 11 |
| 6212-628-004-00 | 12 | 12 |
| 6212-628-005-00 | 12 | 13 |
| 6213-100-003-50 | 17 | 1 |
| 6213-100-003-60 | 17 | 1-A |
| 6213-129-006-00 | 6 | 16 |
| 6213-140-032-10 | 17 | 3 |
| 6213-149-001-00 | 17 | 5 |
| 6213-160-001-50 | 10 | 28-A |
| 6213-160-002-20 | 10 | 28 |
| 6213-161-001-20 | 10 | 29 |
| 6213-164-001-00 | 10 | 30 |
| 6213-240-002-20 | 17 | 10 |
| 6213-311-006-10 | 17 | 7 |
| 6213-319-001-00 | 6 | 24 |
| 6213-610-005-50 | 18 | 1 |
| 6213-614-018-00 | 18 | 2 |
| | 28 | 18 |
| 6213-614-019-00 | 18 | 6 |
| | 28 | 19 |
| 6213-619-001-00 | 18 | 5 |
| 6213-641-022-20 | 19 | 2 |
| 6213-660-023-00 | 19 | 1 |
| 6213-669-008-00 | 19 | 4 |
| 6213-669-022-00 | 19 | 3 |
| 6213-671-054-00 | 19 | 6 |
| 6213-674-046-00 | 25 | 2 |
| 6213-711-004-00 | 18 | 17 |
| 6213-716-001-60 | 18 | 12 |
| 6213-729-016-00 | 18 | 10 |
| 6213-743-002-10 | 18 | 13 |
| | 28 | 20 |
| 6214-111-011-20 | 4 | 1 |
| 6214-115-001-20 | 4 | 2 |
| | 28 | 6 |
| 6214-141-010-10 | 5 | 1 |
| 6214-145-001-30 | 5 | 2 |
| | 28 | 7 |
| 6215-300-036-10 | 20 | 1 |
| 6215-311-027-00 | 29 | 51 |
| 6215-315-002-00 | 20 | 3 |
| 6215-330-024-10 | 29 | 1 |
| 6215-331-008-00 | 29 | 2 |
| 6215-332-013-00 | 29 | 5 |
| 6215-339-001-00 | 29 | 6 |
| 6215-342-001-00 | 29 | 3 |
| 6215-343-001-00 | 29 | 4 |
| 6215-345-001-00 | 29 | 7 |
| 6215-345-002-00 | 29 | 8 |
| 6215-345-003-00 | 29 | 9 |
| 6215-345-004-00 | 29 | 10 |
| 6215-345-005-00 | 29 | 11 |
| 6215-345-006-00 | 29 | 12 |
| 6215-345-007-00 | 29 | 13 |
| 6215-345-008-00 | 29 | 14 |
| 6215-345-009-00 | 29 | 15 |
| 6215-345-010-00 | 29 | 16 |
| 6215-345-011-00 | 29 | 17 |
| 6215-345-012-00 | 29 | 18 |
| 6215-345-013-00 | 29 | 19 |
| 6215-345-014-00 | 29 | 20 |
| 6215-345-015-00 | 29 | 21 |
| 6215-345-016-00 | 29 | 22 |
| 6215-345-017-00 | 29 | 23 |
| 6215-345-018-00 | 29 | 24 |
| 6215-345-019-00 | 29 | 25 |
| 6215-345-020-00 | 29 | 26 |
| 6215-345-021-00 | 29 | 27 |
| 6215-345-022-00 | 29 | 28 |
| 6215-345-023-00 | 29 | 29 |
| 6215-345-024-00 | 29 | 30 |
| 6215-345-025-00 | 29 | 31 |
| 6215-345-026-00 | 29 | 32 |
| 6215-345-027-00 | 29 | 33 |
| 6215-345-028-00 | 29 | 34 |
| 6215-345-029-00 | 29 | 35 |
| 6215-345-030-00 | 29 | 36 |
| 6215-345-031-00 | 29 | 37 |
| 6215-345-032-00 | 29 | 38 |
| 6215-345-033-00 | 29 | 39 |
| 6215-345-034-00 | 29 | 40 |
| 6215-345-035-00 | 29 | 41 |
| 6215-345-036-00 | 29 | 42 |
| 6215-345-037-00 | 29 | 43 |
| 6215-345-038-00 | 29 | 44 |
| 6215-345-039-00 | 29 | 45 |
| 6215-345-040-00 | 29 | 46 |
| 6215-345-041-00 | 29 | 47 |
| 6215-345-042-00 | 29 | 48 |
| 6215-345-043-00 | 29 | 49 |
| 6215-359-001-00 | 20 | 2 |
| 6215-359-002-00 | 29 | 50 |
| 6215-411-126-10 | 20 | 4 |
| 6215-411-127-00 | 20 | 5 |
| 6215-411-128-00 | 20 | 6 |
| 6215-411-198-00 | 22 | 2 |
| 6215-411-198-10 | 22 | 2-A |
| 6215-412-004-00 | 22 | 1 |
| 6215-520-001-00 | 21 | 17 |
| 6215-526-004-00 | 21 | 19 |
| 6215-531-029-00 | 21 | 24 |
| 6215-541-001-10 | 21 | 20 |
| 6215-541-016-60 | 23 | 2 |
| 6215-541-016-70 | 24 | 2 |
| 6215-541-024-50 | 21 | 25 |
| 6215-542-004-20 | 10 | 21 |
| 6215-542-005-20 | 10 | 23 |
| 6215-542-006-00 | 21 | 22 |
| 6215-543-002-10 | 21 | 21 |
| 6215-546-003-30 | 10 | 17 |
| 6215-548-029-20 | 23 | 1 |
| 6215-548-134-00 | 24 | 1 |
| 6215-549-007-10 | 21 | 28 |
| 6215-549-012-00 | 21 | 32 |
| 6215-549-013-00 | 6 | 28 |
| 6215-600-103-30 | 21 | 1 |
| 6215-611-001-00 | 30 | 6 |
| 6215-612-001-00 | 30 | 9 |
| 6215-619-009-00 | 21 | 3 |
| 6215-619-010-00 | 21 | 2 |
| 6215-619-022-00 | 30 | 8 |
| 6215-619-028-00 | 10 | 20-A |
| | 17 | 9-A |

# Numerical Index



| Part Code | Fig. | Key |
|---|---|---|
| 6215-619-028-00 | 28 | 13-A |
| 6215-621-016-30 | 21 | 10 |
| 6215-622-001-00 | 30 | 12 |
| 6215-629-001-00 | 30 | 10 |
| 6215-629-002-00 | 30 | 11 |
| 6215-629-003-00 | 30 | 18 |
| 6215-629-004-00 | 30 | 19 |
| 6215-629-005-00 | 30 | 20 |
| 6215-629-006-00 | 30 | 21 |
| 6215-629-007-00 | 30 | 22 |
| 6215-629-008-00 | 30 | 23 |
| 6215-629-009-00 | 30 | 24 |
| 6215-629-010-00 | 30 | 25 |
| 6215-629-011-00 | 30 | 26 |
| 6215-629-012-00 | 30 | 27 |
| 6215-629-013-00 | 30 | 28 |
| 6215-629-014-00 | 30 | 29 |
| 6215-629-015-00 | 30 | 30 |
| 6215-629-016-00 | 30 | 31 |
| 6215-631-019-00 | 30 | 7 |
| 6215-634-001-00 | 30 | 16 |
| 6215-635-001-00 | 30 | 14 |
| 6215-637-001-00 | 30 | 13 |
| 6215-639-004-00 | 30 | 15 |
| 6215-639-005-00 | 30 | 17 |
| 6215-641-006-00 | 30 | 5 |
| 6215-643-006-00 | 30 | 1 |
| 6215-644-007-00 | 30 | 2 |
| 6215-649-002-00 | 30 | 4 |
| 6215-649-019-00 | 30 | 3 |
| 6219-732-017-00 | 26 | 5 |
| 6219-752-044-00 | 21 | 5 |
| 6219-752-045-00 | 21 | 4 |
| 6219-752-046-00 | 21 | 6 |
| 6219-752-047-00 | 21 | 7 |
| 6281-100-023-00 | 25 | 7 |
| 6281-200-015-10 | 25 | 1 |
| 6281-200-048-00 | 25 | 1-A |
| 6281-213-013-00 | 31 | 7 |
| 6281-213-023-00 | 32 | 7 |
| 6281-214-007-00 | 31 | 12 |
| 6281-214-008-00 | 31 | 13 |
| 6281-214-018-00 | 32 | 13 |
| 6281-214-020-00 | 32 | 12 |
| 6281-215-001-00 | 31 | 17 |
| 6281-215-002-00 | 32 | 17 |
| 6281-216-001-00 | 31 | 18 |
| 6281-216-002-00 | 32 | 18 |
| 6281-217-002-00 | 31 | 16 |
| 6281-217-005-00 | 32 | 16 |
| 6281-221-004-00 | 31 | 4 |
| 6281-221-010-00 | 32 | 4 |
| 6281-222-002-00 | 31 | 1 |
| 6281-222-019-00 | 32 | 1 |
| 6281-229-002-00 | 31 | 2 |
| 6281-229-003-00 | 31 | 3 |
| 6281-229-004-00 | 31 | 5 |
| 6281-229-006-00 | 31 | 8 |
| 6281-229-007-00 | 31 | 9 |
| 6281-229-008-00 | 31 | 10 |
| 6281-229-011-00 | 31 | 15 |
| 6281-229-012-00 | 31 | 19 |
| 6281-229-013-00 | 31 | 20 |
| 6281-229-014-00 | 31 | 21 |
| 6281-229-015-00 | 31 | 22 |
| 6281-229-016-00 | 31 | 23 |
| 6281-229-017-00 | 31 | 24 |
| 6281-229-018-00 | 31 | 25 |
| 6281-229-032-00 | 31 | 6 |
| 6281-229-033-00 | 31 | 11 |
| 6281-229-040-00 | 31 | 14 |
| 6281-229-068-00 | 32 | 2 |
| 6281-229-069-00 | 32 | 3 |
| 6281-229-070-00 | 32 | 5 |
| 6281-229-071-00 | 32 | 8 |
| 6281-229-072-00 | 32 | 9 |
| 6281-229-073-00 | 32 | 10 |
| 6281-229-074-00 | 32 | 15 |
| 6281-229-075-00 | 32 | 19 |
| 6281-229-076-00 | 32 | 20 |
| 6281-229-077-00 | 32 | 21 |
| 6281-229-078-00 | 32 | 22 |
| 6281-229-079-00 | 32 | 23 |
| 6281-229-080-00 | 32 | 24 |
| 6281-229-081-00 | 32 | 25 |
| 6281-229-083-00 | 32 | 6 |
| 6281-229-084-00 | 32 | 11 |
| 6281-229-085-00 | 32 | 14 |
| 6281-271-003-00 | 27 | 1 |
| 6281-271-011-00 | 31 | 26 |
| 6281-271-013-00 | 32 | 26 |
| 6281-410-026-10 | 26 | 4 |
| 6281-910-013-00 | 26 | 6 |
| 6281-971-006-00 | 26 | 1 |
| 6281-971-006-10 | 26 | 1-A |
| 6282-450-011-00 | 26 | 2 |
| 6287-810-015-40 | 28 | 1 |
| 6294-453-002-00 | 6 | 21 |
| 6513-770-022-10 | 18 | 16 |
| 6901-911-020-00 | 9 | 3 |
| 6901-911-025-00 | 25 | 8 |
| 6902-050-816-00 | 10 | 39 |
| 6904-110-818-00 | 6 | 19 |
| 6904-110-822-00 | 6 | 20 |
| | 10 | 4 |
| | 10 | 43 |
| 6904-110-840-00 | 6 | 18 |
| | 18 | 7 |
| 6904-110-850-00 | 10 | 6 |
| 6904-110-855-00 | 10 | 5 |
| 6909-902-299-00 | 6 | 22 |
| 6909-906-105-10 | 17 | 8 |
| 6911-129-006-00 | 2 | 2 |
| J061-210-015-00 | 18 | 11 |
| J062-076-082-00 | 22 | 5 |
| P117-303-003-00 | 10 | 22 |
| V201-360-802-00 | 21 | 8 |
| V210-560-601-20 | 13 | 5 |
| | 21 | 16 |
| V210-560-602-50 | 17 | 2 |
| V211-560-802-00 | 10 | 52 |
| V211-560-802-50 | 5 | 3 |
| V230-360-601-00 | 8 | 4 |
| V230-360-601-20 | 6 | 27 |
| V230-360-601-60 | 26 | 8 |
| V231-360-801-20 | 6 | 32 |
| V231-360-801-60 | 10 | 11 |
| | 17 | 6 |
| V231-360-802-00 | 4 | 3 |
| | 18 | 8 |
| | 18 | 14 |
| | 25 | 3 |
| V231-360-802-50 | 18 | 19 |
| V231-360-803-00 | 10 | 15 |
| V231-360-804-50 | 10 | 12 |

# Numerical Index



| Part Code | Fig. | Key | Part Code | Fig. Key | Part Code | Fig. Key |
|---|---|---|---|---|---|---|
| V231-360-804-50 | 18 | 3 | | | | |
| V231-360-805-00 | 12 | 19 | | | | |
| V231-360-805-50 | 10 | 9 | | | | |
| V231-360-807-50 | 10 | 13 | | | | |
| | 18 | 15 | | | | |
| V231-360-808-50 | 10 | 8 | | | | |
| V233-361-002-00 | 11 | 2 | | | | |
| V233-361-007-00 | 25 | 5 | | | | |
| V301-260-006-00 | 10 | 35 | | | | |
| | 21 | 29 | | | | |
| V304-260-008-00 | 10 | 46 | | | | |
| | 10 | 50 | | | | |
| V305-260-008-00 | 10 | 18 | | | | |
| V401-160-006-00 | 21 | 31 | | | | |
| V401-160-008-00 | 10 | 47 | | | | |
| | 10 | 51 | | | | |
| V411-260-006-00 | 21 | 30 | | | | |
| V523-100-801-60 | 6 | 16-A | | | | |
| V523-101-001-80 | 16 | 2 | | | | |
| V600-110-600-50 | 10 | 45 | | | | |
| V600-110-620-30 | 21 | 13 | | | | |
| V682-200-000-60 | 2 | 5 | | | | |
| V704-140-016-00 | 12 | 15 | | | | |
| V705-140-012-00 | 10 | 31 | | | | |
| V710-140-004-00 | 21 | 23 | | | | |
| V720-101-900-80 | 21 | 26 | | | | |
| V720-102-401-50 | 17 | 4 | | | | |
| | 28 | 17 | | | | |
| V720-102-401-80 | 8 | 3 | | | | |
| | 10 | 32 | | | | |
| V723-102-005-00 | 10 | 41 | | | | |
| | 28 | 16 | | | | |
| V723-102-005-50 | 18 | 18 | | | | |
| | 28 | 21 | | | | |
| V782-160-000-4T | 6 | 23 | | | | |

# Numerical Index




| Part Code | Fig. | Key |
|---|---|---|
| 1342-402-006-00 | 6 | 10 |
| 1376-402-003-00 | 27 | 10 |
| 1425-621-004-00 | 4 | 2 |
| | 4 | 14 |
| | 5 | 2 |
| | 5 | 14 |
| | 8 | 46 |
| | 13 | 3 |
| 1568-668-203-00 | 27 | 6 |
| 1650-780-011-10 | 8 | 49 |
| | 19 | 27-A |
| | 19 | 31 |
| | 20 | 24-A |
| 1656-310-004-00 | 4 | 22 |
| 1719-312-001-00 | 6 | 23 |
| 1826-410-003-00 | 4 | 9 |
| | 5 | 9 |
| 1841-107-006-00 | 19 | 21 |
| | 20 | 21-A |
| | 20 | 29-A |
| | 20 | 29-B |
| 2186-738-059-00 | 6 | 13 |
| | 20 | 19 |
| 3737-172-009-00 | 4 | 17 |
| | 5 | 17 |
| | 12 | 15 |
| | 26 | 13 |
| 3746-172-013-00 | 27 | 11 |
| | 27 | 30 |
| 3801-311-011-00 | 20 | 15 |
| 3805-355-002-20 | 10 | 2 |
| 3817-401-001-00 | 6 | 5-A |
| | 12 | 8 |
| | 20 | 4 |
| 6017-010-042-00 | 1 | 1 |
| 6209-000-007-00 | 8 | 2 |
| 6209-000-007-10 | 8 | 2-A |
| 6209-000-046-00 | 18 | 9 |
| 6209-000-049-10 | 2 | 7 |
| 6209-000-054-00 | 11 | 2 |
| 6209-000-061-00 | 11 | 3 |
| 6209-009-009-00 | 6 | 9 |
| 6209-030-094-00 | 19 | 17 |
| 6209-046-015-00 | 18 | 7 |
| 6209-046-066-00 | 26 | 5 |
| 6209-046-067-10 | 22 | 11 |
| 6209-046-068-00 | 30 | 6 |
| 6209-060-005-00 | 19 | 13 |
| 6209-060-005-10 | 19 | 13-A |
| 6209-060-006-00 | 19 | 11 |
| 6209-140-002-00 | 3 | 5 |
| 6209-140-003-00 | 22 | 28 |
| 6209-300-007-00 | 8 | 21 |
| 6209-300-008-00 | 2 | 8 |
| 6209-300-026-00 | 6 | 2 |
| 6209-300-028-00 | 2 | 9 |
| 6209-300-034-00 | 2 | 10 |
| 6209-360-071-10 | 19 | 26 |
| 6209-360-176-10 | 19 | 20 |
| 6209-360-178-10 | 20 | 22 |
| 6209-360-179-00 | 20 | 23 |
| 6209-360-180-10 | 20 | 27 |
| 6209-360-181-00 | 20 | 28 |
| 6209-360-202-00 | 20 | 20 |
| 6209-360-205-00 | 19 | 30 |
| 6209-360-214-10 | 4 | 23 |
| | 5 | 23 |
| 6209-360-215-10 | 4 | 21 |
| | 5 | 21 |
| 6209-360-225-00 | 30 | 10 |
| 6209-360-227-00 | 8 | 48 |
| 6209-360-228-10 | 8 | 43 |
| 6209-440-005-00 | 27 | 4 |
| 6209-440-008-00 | 30 | 7 |
| 6209-500-005-00 | 6 | 22 |
| 6209-587-008-00 | 16 | 4 |
| 6209-605-003-20 | 8 | 10 |
| 6209-605-004-10 | 8 | 9 |
| 6209-605-007-10 | 8 | 8 |
| | 8 | 8-A |
| 6209-610-001-10 | 8 | 5 |
| 6209-610-003-00 | 2 | 4 |
| | 8 | 7 |
| 6209-610-004-00 | 2 | 3 |
| | 3 | 2 |
| 6209-610-007-00 | 8 | 4 |
| 6209-610-008-00 | 8 | 3 |
| 6209-610-009-00 | 8 | 6 |
| 6209-610-011-00 | 4 | 11 |
| | 5 | 11 |
| 6209-625-003-20 | 8 | 18-A |
| | 31 | 18 |
| 6209-625-004-00 | 12 | 2-A |
| | 31 | 19 |
| 6209-625-014-00 | 8 | 18 |
| 6209-625-015-00 | 12 | 2 |
| 6209-630-004-20 | 19 | 19 |
| 6209-630-004-30 | 19 | 19-A |
| | 31 | 29 |
| 6209-700-007-00 | 12 | 19 |
| 6209-704-011-00 | 5 | 22 |
| 6209-730-005-00 | 15 | 3 |
| 6209-730-007-00 | 18 | 4 |
| 6209-740-008-00 | 8 | 30 |
| 6209-749-001-30 | 12 | 28 |
| 6209-920-002-00 | 19 | 14 |
| 6209-920-003-00 | 19 | 12 |
| | 31 | 27 |
| 6211-110-123-00 | 2 | 1 |
| 6211-110-123-10 | 2 | 1-A |
| 6211-110-123-20 | 2 | 1-B |
| 6211-141-063-10 | 2 | 6 |
| 6211-141-063-20 | 2 | 6-A |
| 6211-141-063-30 | 2 | 6-B |
| | 31 | 3 |
| 6211-170-033-10 | 3 | 1 |
| 6211-173-028-10 | 3 | 7 |
| | 31 | 4 |
| 6211-179-061-10 | 3 | 3 |
| 6211-179-062-10 | 3 | 4 |
| 6211-210-117-30 | 8 | 1 |
| 6211-210-117-40 | 8 | 1-A |
| 6211-210-117-50 | 8 | 1-B |
| 6211-258-002-00 | 8 | 13 |
| | 31 | 17 |
| 6211-258-006-00 | 8 | 11 |
| | 31 | 15 |
| 6211-258-007-00 | 8 | 12 |
| | 31 | 16 |
| 6211-311-101-40 | 12 | 23 |
| 6211-311-119-00 | 12 | 1 |
| 6211-312-030-60 | 12 | 24 |
| 6211-312-030-70 | 31 | 22 |
| 6211-312-031-50 | 12 | 14 |
| 6211-312-031-60 | 31 | 21 |

# Numerical Index



| Part Code | Fig. | Key | Part Code | Fig. | Key | Part Code | Fig. | Key |
|---|---|---|---|---|---|---|---|---|
| 6211-312-032-00 | 12 | 10 | 6212-511-025-00 | 15 | 1 | 6213-219-001-00 | 24 | 4 |
| | 31 | 20 | 6212-521-012-10 | 18 | 3 | 6213-240-005-10 | 19 | 9 |
| 6211-319-028-10 | 12 | 26 | 6212-522-016-30 | 15 | 2 | 6213-240-012-00 | 24 | 3 |
| 6211-321-023-00 | 12 | 9 | 6212-523-034-10 | 15 | 6 | 6213-311-089-20 | 19 | 22 |
| 6211-341-147-00 | 11 | 1 | 6212-523-034-20 | 15 | 6-A | 6213-311-090-10 | 19 | 16 |
| 6211-361-110-00 | 10 | 1 | 6212-524-028-10 | 23 | 14 | 6213-311-095-00 | 19 | 10 |
| 6211-510-023-00 | 8 | 14 | 6212-524-028-20 | 23 | 14-A | 6213-342-007-00 | 8 | 29 |
| 6211-511-025-00 | 8 | 15 | 6212-529-012-00 | 18 | 10 | 6213-342-016-00 | 8 | 28 |
| 6211-511-026-00 | 8 | 16 | 6212-529-015-20 | 15 | 10 | 6213-610-017-20 | 20 | 1 |
| 6211-540-020-00 | 9 | 1 | 6212-530-028-00 | 12 | 30 | 6213-613-010-00 | 20 | 2 |
| 6211-560-009-00 | 9 | 3 | 6212-531-016-00 | 15 | 7 | | 31 | 30 |
| 6211-599-011-00 | 8 | 17 | 6212-535-007-00 | 15 | 4 | 6213-641-007-20 | 21 | 2 |
| | 9 | 2 | 6212-535-015-00 | 15 | 8 | 6213-660-003-10 | 21 | 1 |
| | 9 | 4 | 6212-551-031-00 | 14 | 1 | 6213-669-013-00 | 21 | 3 |
| 6211-740-022-00 | 8 | 40 | 6212-552-017-00 | 14 | 2 | 6213-671-062-00 | 21 | 5 |
| 6211-742-036-00 | 8 | 39 | 6212-561-003-00 | 14 | 3 | 6213-674-061-10 | 26 | 2 |
| 6211-745-005-10 | 8 | 41 | 6212-563-005-00 | 14 | 4 | 6213-674-061-20 | 26 | 2-A |
| 6211-749-031-10 | 4 | 6 | 6212-565-001-00 | 14 | 5 | 6213-676-032-00 | 26 | 4 |
| 6211-749-031-20 | 4 | 6-A | 6212-569-002-00 | 2 | 2 | 6213-711-019-00 | 20 | 11 |
| 6211-749-048-00 | 5 | 6 | | 31 | 2 | 6213-716-024-10 | 20 | 5 |
| 6211-751-002-10 | 3 | 8 | 6212-571-002-30 | 14 | 6 | 6213-716-024-20 | 20 | 5-A |
| | 12 | 12 | 6212-575-014-00 | 14 | 7 | 6213-716-024-30 | 20 | 5-B |
| 6211-760-089-00 | 8 | 26 | 6212-600-018-00 | 14 | 8 | 6213-716-024-40 | 20 | 5-C |
| 6211-760-089-10 | 8 | 26-A | 6212-611-014-00 | 14 | 9 | 6213-719-007-00 | 20 | 10 |
| 6211-766-025-00 | 8 | 25 | 6212-620-016-00 | 14 | 10 | 6213-721-015-00 | 8 | 31 |
| 6211-769-007-00 | 8 | 27 | 6212-626-003-00 | 14 | 11 | 6213-721-039-20 | 20 | 25 |
| 6211-777-047-10 | 13 | 1 | 6212-628-020-00 | 14 | 12 | 6213-721-044-10 | 20 | 16 |
| 6212-111-115-00 | 16 | 1 | 6212-628-021-00 | 14 | 13 | 6213-721-044-20 | 20 | 16-A |
| 6212-115-115-00 | 17 | 1 | 6212-629-006-00 | 14 | 14 | 6213-721-051-10 | 19 | 28 |
| 6212-121-031-00 | 16 | 2 | 6212-629-007-00 | 14 | 15 | 6213-721-051-20 | 19 | 28-A |
| 6212-125-001-00 | 17 | 2 | 6212-629-008-00 | 14 | 16 | 6213-729-011-00 | 20 | 14 |
| 6212-211-008-00 | 16 | 3 | 6212-629-009-00 | 14 | 17 | 6213-729-044-00 | 20 | 17 |
| 6212-230-018-10 | 16 | 5 | 6212-629-010-00 | 14 | 18 | | 31 | 33 |
| 6212-235-008-00 | 16 | 6 | 6213-100-013-00 | 19 | 1 | 6213-741-001-00 | 20 | 12 |
| 6212-271-017-00 | 16 | 7 | 6213-129-006-00 | 8 | 19 | | 31 | 32 |
| 6212-273-017-00 | 9 | 5 | | 8 | 20 | 6213-743-006-00 | 20 | 6 |
| 6212-274-017-00 | 9 | 6 | | 8 | 23 | | 31 | 31 |
| 6212-310-056-00 | 18 | 1 | 6213-140-041-00 | 19 | 5 | 6213-770-004-00 | 20 | 9 |
| 6212-330-133-10 | 18 | 5 | 6213-149-003-30 | 19 | 7 | 6213-770-004-10 | 20 | 9-A |
| 6212-330-133-20 | 18 | 5-A | 6213-160-013-10 | 8 | 32 | 6214-111-036-00 | 4 | 1 |
| 6212-330-133-30 | 18 | 5-B | 6213-161-003-10 | 8 | 34 | | 5 | 1 |
| 6212-330-133-40 | 18 | 5-C | 6213-163-007-10 | 8 | 35 | 6214-115-020-20 | 4 | 12 |
| 6212-333-002-10 | 18 | 6 | 6213-164-001-00 | 8 | 36 | | 5 | 12 |
| 6212-371-089-10 | 18 | 8 | 6213-200-020-00 | 24 | 1 | | 31 | 6 |
| 6212-371-089-20 | 18 | 8-A | 6213-212-004-00 | 24 | 2 | 6214-115-021-00 | 4 | 16 |

# Numerical Index



| Part Code | Fig. | Key | Part Code | Fig. | Key | Part Code | Fig. | Key |
|---|---|---|---|---|---|---|---|---|
| 6214-115-021-00 | 5 | 16 | 6215-411-209-10 | 22 | 14 | 6219-751-011-00 | 31 | 35 |
| | 31 | 7 | 6215-411-210-10 | 22 | 15 | 6219-751-014-00 | 23 | 10-A |
| 6214-115-023-00 | 4 | 4 | 6215-411-211-10 | 22 | 16 | 6219-759-002-00 | 26 | 15 |
| | 5 | 4 | 6215-412-028-00 | 22 | 21 | 6219-759-004-00 | 12 | 16 |
| 6214-115-023-10 | 5 | 4-A | 6215-412-031-00 | 25 | 1 | 6221-700-004-00 | 19 | 23 |
| | 31 | 5 | 6215-419-014-00 | 22 | 24 | 6221-700-004-10 | 19 | 23-A |
| 6214-119-043-30 | 4 | 10 | 6215-419-039-00 | 22 | 7 | 6221-726-008-00 | 19 | 25 |
| | 5 | 10 | 6215-419-042-00 | 22 | 4 | 6221-726-013-00 | 19 | 24 |
| 6214-141-067-10 | 6 | 1 | 6215-419-043-00 | 22 | 5 | 6221-726-013-10 | 19 | 24-A |
| 6214-141-067-20 | 6 | 1-A | 6215-419-044-00 | 22 | 3 | 6224-000-007-00 | 27 | 20 |
| 6214-144-008-20 | 7 | 6 | 6215-419-044-10 | 22 | 3-A | 6224-000-010-10 | 27 | 18 |
| 6214-145-009-00 | 7 | 3 | 6215-419-049-20 | 25 | 2 | 6224-000-014-10 | 27 | 22 |
| 6214-145-031-10 | 7 | 7 | 6215-419-053-10 | 22 | 25 | 6224-000-015-10 | 27 | 26 |
| | 31 | 14 | 6215-419-060-00 | 22 | 9 | 6224-000-020-00 | 30 | 9 |
| 6214-145-032-10 | 30 | 8 | 6215-419-061-00 | 22 | 6 | 6281-100-026-10 | 26 | 16 |
| | 31 | 36 | 6215-419-061-10 | 22 | 6-A | 6281-100-026-20 | 26 | 16-A |
| 6214-145-035-00 | 6 | 3 | 6215-419-062-00 | 22 | 22 | 6281-111-012-00 | 26 | 17 |
| | 31 | 8 | 6215-419-063-10 | 25 | 3 | 6281-200-043-10 | 26 | 1 |
| 6214-145-036-00 | 6 | 4 | 6215-419-064-00 | 22 | 26 | 6281-410-028-00 | 27 | 3 |
| | 31 | 9 | 6215-419-065-00 | 22 | 27 | 6281-410-028-10 | 27 | 3-A |
| 6214-145-037-10 | 31 | 13 | 6215-600-188-10 | 23 | 1 | 6281-410-028-20 | 27 | 3-B |
| 6214-146-004-10 | 6 | 12 | 6215-619-028-00 | 19 | 14-A | 6281-500-109-10 | 28 | 1 |
| | 31 | 11 | | 31 | 28 | 6281-500-109-20 | 28 | 1-A |
| 6214-146-006-10 | 6 | 16 | 6215-619-097-00 | 22 | 18 | 6281-500-109-30 | 28 | 1-B |
| | 31 | 12 | 6215-619-098-00 | 23 | 3 | 6281-940-002-00 | 27 | 14 |
| 6214-146-007-00 | 6 | 8 | 6215-619-099-00 | 22 | 19 | 6281-971-006-00 | 27 | 1 |
| | 31 | 10 | 6215-619-100-00 | 23 | 2 | 6281-971-006-10 | 27 | 1-A |
| 6214-152-010-00 | 6 | 7 | 6215-619-101-00 | 23 | 5 | 6281-980-006-10 | 27 | 12 |
| 6214-152-011-00 | 6 | 14 | 6215-619-103-00 | 23 | 6 | 6281-990-016-20 | 27 | 9 |
| 6214-153-015-00 | 6 | 11 | 6215-619-104-00 | 23 | 7 | 6281-990-017-00 | 27 | 7 |
| 6214-330-001-10 | 4 | 15 | 6215-619-105-00 | 23 | 8 | 6281-999-013-00 | 27 | 8 |
| 6214-330-001-20 | 5 | 15 | 6215-619-107-00 | 23 | 9 | | 27 | 25 |
| 6214-400-025-00 | 7 | 1 | 6215-781-008-00 | 23 | 4 | 6281-999-021-00 | 27 | 27 |
| 6214-400-025-10 | 7 | 1-A | 6215-789-006-00 | 23 | 15 | 6281-999-021-10 | 27 | 27-A |
| 6214-435-029-10 | 4 | 20 | 6216-400-018-00 | 30 | 1 | 6281-999-040-00 | 27 | 23 |
| | 5 | 20 | 6216-400-018-10 | 30 | 1-A | 6281-999-043-00 | 12 | 17 |
| 6214-439-037-20 | 6 | 15 | 6216-410-009-00 | 30 | 4 | 6281-999-045-00 | 27 | 29 |
| 6214-439-048-10 | 6 | 19 | 6216-420-015-00 | 30 | 2 | 6281-999-048-00 | 27 | 25-A |
| 6214-439-049-00 | 6 | 17 | 6216-420-015-10 | 30 | 2-A | 6282-450-007-00 | 27 | 2 |
| 6215-300-066-10 | 22 | 1 | 6216-430-005-00 | 30 | 3 | 6285-885-578-00 | 29 | 1 |
| 6215-315-001-10 | 22 | 2 | 6216-452-002-00 | 30 | 5 | 6287-810-062-30 | 31 | 1 |
| 6215-315-010-00 | 22 | 12 | 6219-711-009-10 | 26 | 9 | 6901-931-240-00 | 26 | 18 |
| 6215-337-038-10 | 22 | 10 | 6219-732-022-10 | 27 | 5 | 6904-110-822-00 | 12 | 29 |
| 6215-401-008-00 | 22 | 17 | 6219-751-010-10 | 23 | 10 | 6904-110-850-00 | 12 | 21 |
| 6215-411-208-10 | 22 | 13 | 6219-751-011-00 | 23 | 13 | 6904-110-855-00 | 12 | 22 |

# Numerical Index




| Part Code | Fig. | Key |
|---|---|---|
| 6904-130-825-00 | 7 | 2 |
| J061-112-020-00 | 20 | 24 |
| J061-116-025-00 | 20 | 21 |
| | 20 | 29 |
| | 20 | 30 |
| J061-160-080-20 | 4 | 24 |
| | 5 | 24 |
| J061-208-010-00 | 8 | 45 |
| J061-216-020-00 | 19 | 27 |
| J062-104-111-00 | 22 | 8 |
| | 22 | 23 |
| J062-126-134-00 | 8 | 44 |
| | 25 | 4 |
| J062-138-148-00 | 30 | 11 |
| V195-164-012-10 | 27 | 19 |
| V200-260-502-00 | 27 | 15 |
| V203-461-003-00 | 26 | 10 |
| V210-560-601-20 | 15 | 5 |
| V210-560-602-00 | 20 | 13 |
| V220-540-603-00 | 19 | 2 |
| V230-360-601-20 | 4 | 18 |
| | 5 | 18 |
| | 12 | 11 |
| | 12 | 18 |
| | 26 | 14 |
| | 27 | 13 |
| V230-360-601-60 | 8 | 42 |
| V230-360-603-00 | 3 | 6 |
| | 15 | 11 |
| V230-360-604-50 | 4 | 19 |
| | 5 | 19 |
| V230-360-605-00 | 21 | 4 |
| V231-360-801-20 | 4 | 3 |
| | 5 | 3 |
| | 6 | 18 |
| | 8 | 47 |
| | 10 | 4 |
| | 12 | 20 |
| | 19 | 15 |
| | 19 | 29 |
| | 20 | 18 |
| | 20 | 26 |
| | 27 | 24 |
| | 27 | 28 |
| V231-360-801-60 | 6 | 20 |
| V231-360-801-60 | 6 | 24 |
| | 12 | 7 |
| | 12 | 25 |
| | 13 | 2 |
| | 19 | 8 |
| | 23 | 16 |
| | 26 | 3 |
| V231-360-802-00 | 6 | 21 |
| | 20 | 7 |
| V231-360-802-50 | 23 | 11 |
| V231-360-803-00 | 4 | 13 |
| | 5 | 13 |
| | 22 | 20 |
| V231-360-803-50 | 4 | 5 |
| | 5 | 5 |
| | 26 | 7 |
| V231-360-804-00 | 12 | 6 |
| V231-360-804-50 | 14 | 19 |
| V231-360-805-00 | 4 | 8 |
| | 5 | 8 |
| V231-360-806-00 | 12 | 3 |
| | 12 | 3-A |
| V231-360-806-50 | 12 | 4 |
| V231-360-807-00 | 15 | 9 |
| | 20 | 8 |
| V231-360-807-50 | 4 | 7 |
| | 5 | 7 |
| V231-360-808-00 | 20 | 3 |
| V231-360-808-50 | 12 | 5 |
| V233-361-006-50 | 26 | 8 |
| V251-340-806-00 | 8 | 22 |
| V304-260-008-00 | 12 | 32 |
| | 26 | 6 |
| V304-460-008-00 | 6 | 6-A |
| V304-700-008-00 | 6 | 6 |
| | 7 | 4 |
| | 7 | 8 |
| V360-260-006-00 | 27 | 21 |
| V401-160-005-00 | 27 | 17 |
| V401-160-006-00 | 19 | 18 |
| V401-160-008-00 | 12 | 33 |
| V401-160-010-00 | 26 | 11 |
| V401-160-012-00 | 11 | 4 |
| V401-700-008-00 | 7 | 9 |
| V411-260-005-00 | 27 | 16 |
| V411-700-008-00 | 6 | 5 |
| | 7 | 5 |
| V523-100-801-60 | 8 | 19-A |
| | 8 | 20-A |
| | 8 | 23-A |
| V523-101-001-80 | 18 | 2 |
| V580-140-301-20 | 26 | 12 |
| V600-110-600-50 | 12 | 31 |
| V682-200-000-60 | 2 | 5 |
| V705-140-012-00 | 8 | 33 |
| V720-102-401-10 | 19 | 4 |
| | 31 | 25 |
| V720-102-401-80 | 8 | 38 |
| | 10 | 3 |
| | 19 | 6 |
| | 31 | 26 |
| V720-103-502-50 | 3 | 9 |
| | 12 | 13 |
| V721-103-109-50 | 23 | 12 |
| | 31 | 34 |
| V723-102-003-00 | 19 | 3 |
| | 31 | 24 |
| V723-102-005-00 | 12 | 27 |
| | 31 | 23 |
| V780-140-000-2B | 8 | 37 |
| V782-160-000-4T | 8 | 24 |

# Numerical Index




| Part Code | Fig. | Key |
|---|---|---|
| 1102-611-006-10 | 74 | 8 |
| 1118-606-002-10 | 74 | 15 |
| | 93 | 10 |
| | 94 | 10 |
| 1146-601-002-00 | 74 | 14 |
| 1342-402-006-00 | 86 | 44 |
| | 87 | 23 |
| 1376-402-003-00 | 86 | 45 |
| | 87 | 24 |
| 1376-606-005-00 | 74 | 3 |
| 1404-503-006-00 | 66 | 10 |
| | 67 | 10 |
| 1415-102-007-00 | 107 | 1 |
| 1415-102-008-00 | 107 | 3 |
| 1415-102-013-00 | 107 | 9 |
| 1416-621-037-00 | 12 | 5 |
| | 13 | 5 |
| 1421-602-005-10 | 93 | 5 |
| | 94 | 5 |
| 1421-603-004-00 | 3 | 19 |
| | 4 | 19 |
| 1423-616-004-00 | 3 | 22 |
| | 4 | 21 |
| 1425-433-018-00 | 31 | 5 |
| 1425-621-004-00 | 66 | 20 |
| | 67 | 19 |
| 1427-301-002-20 | 26 | 6 |
| 1427-301-007-00 | 26 | 11 |
| 1427-310-001-00 | 40 | 7 |
| 1427-310-220-10 | 40 | 5 |
| 1432-616-002-00 | 74 | 10 |
| 1440-103-201-00 | 107 | 4 |
| 1442-313-202-00 | 42 | 2 |
| 1444-102-204-00 | 107 | 5 |
| 1444-122-002-00 | 41 | 35 |
| 1444-307-007-00 | 64 | 17 |
| | 64 | 30 |
| | 64 | 41 |
| 1444-314-008-00 | 25 | 15 |
| 1444-314-009-10 | 35 | 5 |
| 1444-328-272-00 | 42 | 4 |
| 1444-328-273-00 | 42 | 3 |
| 1444-411-006-00 | 26 | 7 |
| 1480-207-011-00 | 39 | 21 |
| 1518-306-203-10 | 61 | 58 |
| 1518-432-250-10 | 61 | 57 |
| 1524-122-001-10 | 41 | 8 |
| 1544-104-205-00 | 7 | 5 |
| 1544-120-008-10 | 21 | 7 |
| 1544-304-006-10 | 26 | 5 |
| 1560-132-007-30 | 36 | 21 |
| | 41 | 36 |
| 1560-630-024-00 | 92 | 12 |
| 1560-666-004-00 | 77 | 23 |
| | 78 | 23 |
| | 79 | 23 |
| 1560-695-021-00 | 36 | 18 |
| 1560-695-022-00 | 36 | 22 |
| 1564-216-004-10 | 25 | 4 |
| 1572-102-003-00 | 107 | 8 |
| 1575-261-018-00 | 33 | 7 |
| | 34 | 7 |
| 1575-306-004-00 | 21 | 13 |
| 1575-616-005-00 | 90 | 4 |
| | 91 | 4 |
| 1588-112-002-10 | 14 | 6 |
| 1588-112-002-20 | 14 | 6-A |
| 1593-117-003-10 | 16 | 5 |
| | 17 | 9 |
| 1600-112-231-00 | 14 | 7 |
| 1600-112-232-00 | 14 | 8 |
| 1600-117-002-10 | 17 | 6 |
| 1600-505-007-10 | 16 | 4 |
| 1614-129-003-00 | 82 | 60 |
| | 83 | 60 |
| | 84 | 42 |
| | 85 | 42 |
| 1614-203-015-00 | 25 | 2 |
| 1614-222-007-00 | 32 | 16 |
| 1614-223-221-00 | 64 | 22 |
| | 106 | 9 |
| 1614-702-551-20 | 92 | 8 |
| 1614-702-552-00 | 92 | 9 |
| 1614-922-200-20 | 105 | 1 |
| 1620-410-001-11 | 104 | 1 |
| 1632-273-200-00 | 33 | 16 |
| | 34 | 16 |
| 1635-303-005-00 | 20 | 11 |
| 1636-436-002-00 | 103 | 2 |
| 1636-611-011-00 | 76 | 5 |
| 1636-631-008-00 | 88 | 4 |
| | 89 | 7 |
| 1646-226-053-00 | 36 | 2 |
| 1646-640-580-00 | 36 | 33 |
| 1650-102-202-10 | 3 | 2 |
| | 4 | 2 |
| 1650-104-200-10 | 7 | 1 |
| 1650-104-201-00 | 7 | 3 |
| 1650-104-203-10 | 7 | 4 |
| 1650-104-210-00 | 7 | 2 |
| 1650-135-002-00 | 41 | 6 |
| 1650-509-280-00 | 68 | 44 |
| | 68 | 48 |
| 1650-509-310-00 | 69 | 20 |
| | 70 | 21 |
| 1650-650-015-00 | 89 | 17 |
| 1650-650-017-00 | 89 | 18 |
| 1650-650-222-00 | 86 | 8 |
| | 87 | 6 |
| 1656-509-310-10 | 68 | 55 |
| 1659-650-200-20 | 14 | 1 |
| 1659-650-200-30 | 14 | 1-A |
| 1672-105-210-10 | 10 | 1 |
| 1672-105-211-00 | 107 | 7 |
| 1672-301-002-00 | 26 | 2 |
| 1672-301-003-00 | 26 | 8 |
| 1672-301-004-00 | 26 | 10 |
| 1673-431-001-10 | 32 | 22 |
| 1673-525-002-30 | 92 | 7 |
| 1674-654-270-00 | 77 | 25 |
| | 78 | 25 |
| | 79 | 25 |
| 1674-654-271-00 | 77 | 26 |
| | 78 | 26 |
| | 79 | 26 |
| 1674-654-272-00 | 77 | 27 |
| | 78 | 27 |
| | 79 | 27 |
| 1674-904-005-20 | 98 | 11 |
| | 99 | 11 |
| 1674-904-008-10 | 98 | 5 |
| | 99 | 5 |
| 1675-112-002-00 | 14 | 2 |
| | 15 | 2 |
| 1675-116-001-00 | 16 | 11 |

# Numerical Index



| Part Code | Fig. | Key |
|---|---|---|
| 1675-262-002-00 | 64 | 29 |
| 1675-506-002-00 | 68 | 46 |
| 1683-271-560-00 | 36 | 20 |
| 1684-112-230-00 | 15 | 1 |
| 1684-112-230-10 | 15 | 1-A |
| 1685-604-003-00 | 3 | 29 |
| | 4 | 28 |
| | 53 | 18 |
| | 54 | 18 |
| 1688-211-057-00 | 33 | 8 |
| | 34 | 8 |
| 1688-211-505-00 | 111 | 4 |
| 1688-211-506-00 | 111 | 8 |
| 1688-211-509-00 | 111 | 11 |
| 1688-211-522-00 | 111 | 13 |
| 1689-205-005-10 | 27 | 3 |
| 1689-271-006-00 | 36 | 3 |
| 1689-272-240-00 | 37 | 15 |
| 1689-272-260-00 | 37 | 1 |
| 1689-502-250-00 | 69 | 10 |
| | 70 | 10 |
| 1689-613-260-00 | 81 | 2 |
| 1689-621-007-00 | 72 | 6 |
| 1689-621-008-10 | 72 | 4 |
| 1690-102-210-00 | 3 | 30 |
| | 4 | 29 |
| 1690-102-212-00 | 3 | 31 |
| | 4 | 30 |
| 1690-102-213-00 | 3 | 32 |
| | 4 | 31 |
| 1690-102-214-00 | 3 | 33 |
| | 4 | 32 |
| 1690-102-215-00 | 3 | 34 |
| | 4 | 33 |
| 1690-102-216-00 | 3 | 35 |
| | 4 | 34 |
| 1690-102-217-00 | 3 | 36 |
| | 4 | 35 |
| 1690-650-320-00 | 82 | 39 |
| | 83 | 39 |
| | 84 | 21 |
| | 85 | 21 |
| 1690-742-008-10 | 92 | 14 |
| 1690-780-001-00 | 13 | 14 |
| 1696-901-006-00 | 95 | 7 |
| 1696-901-006-00 | 96 | 7 |
| 1703-670-320-00 | 81 | 3 |
| 1703-670-322-00 | 81 | 4 |
| 1703-670-323-00 | 81 | 5 |
| 1703-670-324-00 | 81 | 6 |
| 1703-670-325-00 | 81 | 7 |
| 1703-670-326-00 | 81 | 8 |
| 1704-112-001-00 | 53 | 2 |
| | 53 | 5 |
| | 54 | 2 |
| | 54 | 5 |
| 1704-740-008-10 | 74 | 5 |
| 1705-408-230-00 | 67 | 16 |
| | 68 | 12 |
| 1705-902-006-10 | 98 | 6 |
| | 98 | 6-A |
| | 99 | 6 |
| | 99 | 6-A |
| 1705-902-007-10 | 98 | 8 |
| | 99 | 8 |
| 1705-902-008-10 | 98 | 7 |
| | 99 | 7 |
| 1705-904-002-30 | 98 | 2 |
| | 99 | 2 |
| 1705-904-004-10 | 98 | 1 |
| | 99 | 1 |
| 1705-904-011-00 | 99 | 14 |
| 1710-241-053-00 | 39 | 16 |
| | 106 | 26 |
| 1716-105-001-00 | 10 | 7 |
| 1716-501-006-10 | 21 | 8 |
| 1716-601-009-00 | 3 | 20 |
| | 4 | 20 |
| | 52 | 6 |
| | 53 | 10 |
| | 54 | 10 |
| 1716-680-222-00 | 82 | 51 |
| | 82 | 55 |
| | 82 | 63 |
| | 83 | 51 |
| | 83 | 55 |
| | 83 | 63 |
| | 84 | 33 |
| | 84 | 37 |
| | 84 | 45 |
| 1716-680-222-00 | 85 | 33 |
| | 85 | 37 |
| | 85 | 45 |
| 1716-680-330-10 | 82 | 50 |
| | 82 | 54 |
| | 82 | 62 |
| | 83 | 50 |
| | 83 | 54 |
| | 83 | 62 |
| | 84 | 32 |
| | 84 | 36 |
| | 84 | 44 |
| | 85 | 32 |
| | 85 | 36 |
| | 85 | 44 |
| 1716-901-016-00 | 95 | 5 |
| | 96 | 5 |
| 1719-312-001-00 | 3 | 24 |
| | 4 | 23 |
| | 6 | 11 |
| | 57 | 9 |
| 1719-505-330-00 | 17 | 16 |
| 1719-650-250-00 | 82 | 7 |
| | 82 | 9 |
| | 82 | 11 |
| | 82 | 13 |
| | 83 | 7 |
| | 83 | 9 |
| | 83 | 11 |
| | 83 | 13 |
| | 84 | 1 |
| | 84 | 4 |
| | 84 | 13 |
| | 85 | 1 |
| | 85 | 4 |
| | 85 | 13 |
| 1720-221-210-00 | 59 | 13 |
| | 60 | 13 |
| 1720-221-211-00 | 108 | 1 |
| 1720-221-212-00 | 108 | 2 |
| 1720-221-213-00 | 108 | 3 |
| 1720-221-214-00 | 108 | 4 |
| 1720-221-215-00 | 108 | 5 |
| 1720-221-216-00 | 108 | 6 |
| 1720-221-217-00 | 108 | 7 |

# Numerical Index



| Part Code | Fig. | Key | Part Code | Fig. | Key | Part Code | Fig. | Key |
|---|---|---|---|---|---|---|---|---|
| 1720-221-218-00 | 108 | 8 | 1725-432-107-00 | 61 | 5 | 1725-680-220-10 | 84 | 41 |
| 1720-221-219-00 | 108 | 9 | 1725-432-108-00 | 61 | 16 | | 85 | 41 |
| 1720-221-221-00 | 108 | 10 | 1725-432-110-00 | 61 | 3 | 1725-681-200-00 | 82 | 1 |
| 1720-221-222-00 | 108 | 11 | 1725-432-113-00 | 61 | 15 | | 82 | 3 |
| 1720-221-224-00 | 108 | 12 | 1725-432-114-00 | 61 | 17 | | 82 | 5 |
| 1720-221-225-00 | 108 | 13 | | 61 | 36 | | 83 | 1 |
| 1720-221-230-00 | 59 | 14 | 1725-432-711-00 | 61 | 8 | | 83 | 3 |
| | 60 | 14 | 1725-432-712-10 | 61 | 9 | | 83 | 5 |
| 1723-103-301-10 | 9 | 6 | 1725-432-713-00 | 61 | 10 | 1725-690-071-00 | 86 | 21 |
| 1724-304-005-00 | 25 | 13 | 1725-432-714-00 | 61 | 11 | | 87 | 16 |
| 1725-103-001-00 | 5 | 10 | 1725-432-715-00 | 61 | 12 | 1728-102-220-00 | 3 | 12 |
| 1725-103-002-00 | 5 | 8 | 1725-433-202-10 | 37 | 11 | | 4 | 12 |
| 1725-104-332-00 | 9 | 5 | | 37 | 27 | 1728-204-002-00 | 27 | 1 |
| 1725-104-333-00 | 9 | 4 | | 41 | 25 | 1728-204-073-30 | 27 | 5 |
| 1725-105-330-10 | 10 | 11 | | 42 | 14 | 1728-307-004-00 | 39 | 9 |
| 1725-105-330-20 | 10 | 11-A | | 61 | 19 | 1728-307-025-00 | 39 | 12 |
| 1725-201-002-00 | 1 | 11 | 1725-434-005-00 | 61 | 33 | 1728-307-026-10 | 39 | 14 |
| | 1 | 14 | 1725-434-013-00 | 61 | 50 | 1728-310-052-00 | 40 | 2 |
| 1725-218-109-00 | 61 | 4 | 1725-434-101-00 | 61 | 20 | 1728-317-251-10 | 43 | 2 |
| 1725-219-121-00 | 61 | 6 | 1725-434-106-00 | 61 | 47 | 1728-407-076-10 | 48 | 6 |
| | 61 | 39 | 1725-434-107-00 | 61 | 48 | | 49 | 7 |
| | 61 | 43 | 1725-434-108-00 | 61 | 53 | 1728-408-001-00 | 50 | 15 |
| 1725-219-215-00 | 111 | 6 | 1725-434-111-00 | 61 | 24 | 1728-441-701-10 | 63 | 2 |
| 1725-219-216-00 | 111 | 7 | 1725-434-113-00 | 61 | 45 | 1728-508-280-10 | 68 | 1 |
| 1725-219-232-00 | 111 | 5 | 1725-434-114-00 | 61 | 21 | 1729-111-006-10 | 12 | 7 |
| 1725-219-720-20 | 33 | 5 | | 61 | 25 | | 13 | 7 |
| | 34 | 5 | 1725-434-115-00 | 61 | 22 | 1729-111-283-00 | 12 | 9 |
| 1725-219-722-00 | 109 | 1 | | 61 | 26 | | 13 | 9 |
| 1725-219-723-10 | 109 | 2 | 1725-434-121-00 | 61 | 42 | 1729-111-284-00 | 12 | 10 |
| 1725-219-724-00 | 109 | 3 | 1725-434-122-00 | 61 | 40 | | 13 | 10 |
| 1725-219-725-00 | 109 | 4 | | 61 | 44 | 1729-202-014-00 | 32 | 27 |
| 1725-219-726-00 | 109 | 5 | 1725-434-123-00 | 61 | 49 | 1729-509-001-10 | 68 | 34 |
| 1725-219-727-00 | 109 | 6 | 1725-434-124-00 | 61 | 54 | 1729-601-280-10 | 72 | 11 |
| 1725-219-728-00 | 109 | 7 | 1725-436-320-00 | 62 | 2 | 1729-604-003-00 | 3 | 28 |
| 1725-219-729-00 | 109 | 8 | 1725-436-600-00 | 62 | 1 | | 4 | 27 |
| 1725-219-731-00 | 109 | 9 | 1725-436-601-00 | 62 | 6 | 1729-652-232-00 | 86 | 9 |
| 1725-219-732-00 | 109 | 10 | 1725-436-610-00 | 62 | 3 | 1729-702-003-00 | 71 | 12 |
| 1725-219-733-00 | 109 | 11 | 1725-436-611-00 | 62 | 4 | 1729-705-009-00 | 80 | 2 |
| 1725-219-734-00 | 109 | 12 | 1725-436-612-00 | 62 | 5 | | 81 | 23 |
| 1725-271-003-00 | 58 | 14 | 1725-509-260-00 | 68 | 7 | 1729-741-007-00 | 74 | 2 |
| 1725-304-713-00 | 61 | 23 | 1725-611-087-00 | 77 | 3 | 1739-401-001-00 | 48 | 5 |
| | 61 | 27 | | 78 | 3 | | 49 | 6 |
| 1725-308-103-00 | 61 | 30 | | 79 | 3 | 1739-401-701-00 | 45 | 1 |
| | 61 | 37 | 1725-680-220-10 | 82 | 59 | 1739-407-074-00 | 48 | 3 |
| 1725-432-101-00 | 61 | 1 | | 83 | 59 | | 49 | 4 |

# Numerical Index




| Part Code | Fig. | Key |
|---|---|---|
| 1739-611-850-00 | 75 | 15 |
| 1739-619-310-00 | 77 | 16 |
| | 78 | 16 |
| | 79 | 16 |
| 1739-619-320-00 | 77 | 15 |
| | 78 | 15 |
| | 79 | 15 |
| 1739-619-320-10 | 77 | 15-A |
| | 78 | 15-A |
| | 79 | 15-A |
| 1739-681-220-20 | 82 | 35 |
| | 83 | 35 |
| | 84 | 17 |
| | 85 | 17 |
| 1739-904-004-10 | 98 | 3 |
| | 99 | 3 |
| 1740-313-300-10 | 42 | 1 |
| 1740-313-301-00 | 42 | 5 |
| 1740-407-530-00 | 68 | 52 |
| 1740-517-600-00 | 69 | 16 |
| | 70 | 17 |
| 1740-517-610-00 | 69 | 23 |
| | 70 | 24 |
| 1740-680-530-20 | 82 | 37 |
| | 83 | 37 |
| | 84 | 19 |
| | 85 | 19 |
| 1740-680-550-00 | 80 | 17 |
| 1740-680-551-00 | 80 | 18 |
| | 80 | 20 |
| 1742-313-001-10 | 29 | 6 |
| 1742-504-004-00 | 41 | 33 |
| 1742-606-001-10 | 90 | 5 |
| | 91 | 5 |
| 1742-662-001-00 | 88 | 8 |
| | 89 | 11 |
| 1746-902-004-00 | 81 | 18 |
| 1747-640-067-00 | 37 | 2 |
| 1752-508-005-00 | 66 | 15 |
| | 67 | 14 |
| 1752-606-004-00 | 53 | 11 |
| | 54 | 11 |
| 1755-111-300-00 | 12 | 4 |
| | 13 | 4 |
| 1756-102-007-00 | 72 | 9 |
| 1757-901-011-00 | 97 | 3 |
| 1760-604-001-00 | 52 | 15 |
| 1763-601-003-00 | 55 | 4 |
| | 56 | 4 |
| 1764-603-002-00 | 57 | 2 |
| | 57 | 5 |
| 1770-102-004-00 | 3 | 4 |
| | 4 | 4 |
| 1770-111-004-00 | 12 | 12 |
| | 13 | 12 |
| 1770-621-530-00 | 81 | 19 |
| 1770-902-004-00 | 97 | 2 |
| 1770-902-051-00 | 97 | 1 |
| 1771-105-001-10 | 10 | 5 |
| 1771-215-001-10 | 27 | 6 |
| 1771-215-210-00 | 27 | 2 |
| 1771-244-011-10 | 32 | 24 |
| 1771-244-011-20 | 32 | 24-A |
| 1771-246-052-00 | 35 | 3 |
| 1771-307-051-20 | 39 | 1 |
| 1771-407-001-10 | 48 | 2 |
| | 49 | 3 |
| 1771-407-200-00 | 48 | 1 |
| 1771-503-003-00 | 64 | 7 |
| 1771-510-250-00 | 69 | 3 |
| | 70 | 3 |
| 1771-510-251-00 | 69 | 5 |
| | 70 | 5 |
| 1772-652-001-00 | 80 | 15 |
| | 81 | 26 |
| 1772-654-001-00 | 77 | 21 |
| | 78 | 21 |
| | 79 | 21 |
| 1772-654-002-10 | 77 | 22 |
| | 78 | 22 |
| | 79 | 22 |
| 1772-654-210-00 | 77 | 20 |
| | 78 | 20 |
| | 79 | 20 |
| 1772-654-212-00 | 110 | 1 |
| 1772-654-213-00 | 110 | 2 |
| 1772-654-215-00 | 110 | 3 |
| 1772-654-216-00 | 77 | 7 |
| | 77 | 12 |
| | 78 | 7 |
| 1772-654-216-00 | 78 | 12 |
| | 79 | 7 |
| | 79 | 12 |
| | 110 | 7 |
| 1772-654-217-00 | 110 | 8 |
| 1772-654-250-10 | 82 | 42 |
| | 83 | 42 |
| | 84 | 24 |
| | 85 | 24 |
| 1772-654-251-00 | 82 | 43 |
| | 83 | 43 |
| | 84 | 25 |
| | 85 | 25 |
| 1772-654-280-10 | 82 | 44 |
| | 83 | 44 |
| | 84 | 26 |
| | 85 | 26 |
| 1772-654-281-00 | 82 | 45 |
| | 83 | 45 |
| | 84 | 27 |
| | 85 | 27 |
| 1772-654-282-00 | 82 | 46 |
| | 83 | 46 |
| | 84 | 28 |
| | 85 | 28 |
| 1773-267-002-00 | 58 | 8 |
| 1773-401-200-00 | 44 | 1 |
| 1773-401-202-10 | 44 | 2 |
| | 45 | 2 |
| 1773-702-001-10 | 92 | 3 |
| 1773-702-002-00 | 92 | 11 |
| 1774-111-310-10 | 12 | 8 |
| | 13 | 8 |
| 1774-111-311-00 | 12 | 11 |
| | 13 | 11 |
| 1774-272-071-00 | 37 | 16 |
| 1774-650-212-00 | 77 | 6 |
| | 77 | 11 |
| | 78 | 6 |
| | 78 | 11 |
| | 79 | 6 |
| | 79 | 11 |
| 1774-680-250-00 | 82 | 33 |
| | 83 | 33 |
| | 84 | 15 |

# Numerical Index




| Part Code | Fig. | Key |
|---|---|---|
| 1774-680-250-00 | 85 | 15 |
| 1774-680-260-00 | 80 | 14 |
| | 81 | 25 |
| 1774-904-031-10 | 99 | 13 |
| 1774-904-032-00 | 98 | 13 |
| 1776-432-003-00 | 61 | 7 |
| 1776-505-004-00 | 29 | 4 |
| 1776-904-002-10 | 98 | 5-A |
| | 99 | 5-A |
| 1782-103-051-00 | 5 | 9 |
| 1786-631-005-00 | 3 | 38 |
| | 4 | 37 |
| | 74 | 7 |
| | 77 | 33 |
| 1789-695-330-00 | 82 | 15-A |
| | 82 | 16-A |
| | 82 | 17-A |
| | 82 | 18-A |
| | 82 | 19-A |
| | 82 | 20-A |
| | 82 | 21-A |
| | 82 | 22-A |
| | 82 | 23-A |
| | 82 | 24-A |
| | 83 | 15-A |
| | 83 | 16-A |
| | 83 | 17-A |
| | 83 | 18-A |
| | 83 | 19-A |
| | 83 | 20-A |
| | 83 | 21-A |
| | 83 | 22-A |
| | 83 | 23-A |
| | 83 | 24-A |
| | 84 | 5-A |
| | 84 | 6-A |
| | 84 | 7-A |
| | 84 | 8-A |
| | 84 | 9-A |
| | 84 | 10-A |
| | 84 | 11-A |
| | 84 | 12-A |
| | 85 | 5-A |
| | 85 | 6-A |
| | 85 | 7-A |
| 1789-695-330-00 | 85 | 8-A |
| | 85 | 9-A |
| | 85 | 10-A |
| | 85 | 11-A |
| | 85 | 12-A |
| 1792-509-310-00 | 69 | 9 |
| | 70 | 9 |
| 1792-658-006-00 | 72 | 10 |
| 1800-652-202-00 | 86 | 18 |
| 1800-652-400-00 | 82 | 15 |
| | 82 | 16 |
| | 82 | 17 |
| | 82 | 18 |
| | 82 | 19 |
| | 82 | 20 |
| | 82 | 21 |
| | 82 | 22 |
| | 82 | 23 |
| | 82 | 24 |
| | 83 | 15 |
| | 83 | 16 |
| | 83 | 17 |
| | 83 | 18 |
| | 83 | 19 |
| | 83 | 20 |
| | 83 | 21 |
| | 83 | 22 |
| | 83 | 23 |
| | 83 | 24 |
| | 84 | 5 |
| | 84 | 6 |
| | 84 | 7 |
| | 84 | 8 |
| | 84 | 9 |
| | 84 | 10 |
| | 84 | 11 |
| | 84 | 12 |
| | 85 | 5 |
| | 85 | 6 |
| | 85 | 7 |
| | 85 | 8 |
| | 85 | 9 |
| | 85 | 10 |
| | 85 | 11 |
| | 85 | 12 |
| 1801-103-300-10 | 6 | 3 |
| 1801-111-270-10 | 11 | 10 |
| 1801-116-002-20 | 17 | 18 |
| 1801-509-530-00 | 69 | 12 |
| | 70 | 12 |
| 1801-509-530-10 | 69 | 12-A |
| | 70 | 12-A |
| 1802-432-001-00 | 26 | 9 |
| 1803-104-202-00 | 8 | 2 |
| 1803-104-203-00 | 8 | 6 |
| 1803-104-205-00 | 8 | 7 |
| 1803-104-222-00 | 8 | 4 |
| 1803-104-223-00 | 8 | 5 |
| 1805-202-025-00 | 26 | 12 |
| 1805-508-260-00 | 66 | 1 |
| | 67 | 1 |
| 1805-509-500-00 | 69 | 3-A |
| | 70 | 3-A |
| 1805-509-500-10 | 69 | 3-B |
| | 70 | 3-B |
| 1805-509-501-00 | 69 | 4 |
| | 70 | 4 |
| 1805-509-501-10 | 69 | 4-A |
| | 70 | 4-A |
| 1805-652-206-00 | 86 | 17 |
| 1805-652-207-00 | 86 | 22 |
| 1806-104-230-00 | 8 | 3 |
| 1809-102-330-00 | 3 | 14 |
| | 4 | 14 |
| 1809-103-081-00 | 6 | 10 |
| 1809-103-810-10 | 6 | 7 |
| 1809-103-810-20 | 6 | 7-A |
| 1809-104-310-00 | 8 | 18 |
| 1809-104-602-00 | 8 | 6-A |
| 1809-104-610-00 | 8 | 13 |
| 1809-111-002-00 | 12 | 3 |
| | 13 | 3 |
| 1809-117-002-00 | 16 | 2 |
| | 17 | 5 |
| 1809-117-061-00 | 17 | 13 |
| 1809-117-063-00 | 17 | 12 |
| 1809-117-610-10 | 17 | 4 |
| 1809-117-630-00 | 17 | 1 |
| 1809-405-003-00 | 46 | 4 |
| | 47 | 4 |

# Numerical Index



| Part Code | Fig. | Key |
|---|---|---|
| 1809-405-004-20 | 46 | 10 |
| | 47 | 13 |
| 1809-405-008-00 | 46 | 13 |
| | 47 | 16 |
| 1809-503-003-00 | 64 | 15 |
| | 64 | 27 |
| | 64 | 39 |
| 1809-503-220-10 | 64 | 11 |
| 1809-509-006-00 | 68 | 47 |
| 1809-553-210-20 | 71 | 1 |
| 1809-553-230-00 | 71 | 7 |
| 1809-553-240-20 | 71 | 3 |
| 1809-553-280-00 | 65 | 8 |
| | 71 | 5 |
| 1809-601-001-00 | 72 | 8 |
| 1809-603-001-00 | 73 | 1 |
| 1809-603-002-00 | 73 | 2 |
| 1809-606-002-00 | 74 | 6 |
| 1809-650-006-00 | 77 | 4 |
| | 78 | 4 |
| | 79 | 4 |
| 1809-650-012-00 | 77 | 30 |
| | 79 | 30 |
| 1809-650-230-00 | 77 | 5 |
| | 78 | 5 |
| | 79 | 5 |
| 1809-650-232-00 | 77 | 8 |
| | 77 | 13 |
| | 78 | 8 |
| | 78 | 13 |
| | 79 | 8 |
| | 79 | 13 |
| 1809-650-233-00 | 77 | 9 |
| | 77 | 14 |
| | 78 | 9 |
| | 78 | 14 |
| | 79 | 9 |
| | 79 | 14 |
| 1809-650-240-00 | 77 | 10 |
| | 78 | 10 |
| | 79 | 10 |
| 1809-670-061-10 | 80 | 1 |
| 1809-670-062-00 | 80 | 5 |
| 1809-670-220-00 | 81 | 9 |
| 1809-670-220-10 | 81 | 9-A |
| 1809-670-290-00 | 80 | 19 |
| 1809-670-620-00 | 80 | 26 |
| 1809-690-204-00 | 87 | 13 |
| 1809-690-205-00 | 86 | 23 |
| | 87 | 17 |
| 1809-690-602-00 | 86 | 4 |
| 1809-690-710-00 | 86 | 26 |
| 1809-695-630-00 | 89 | 13 |
| 1809-695-640-00 | 89 | 15 |
| 1809-801-002-10 | 93 | 8 |
| | 94 | 8 |
| 1809-801-004-00 | 93 | 16 |
| | 94 | 16 |
| 1809-801-007-00 | 93 | 17 |
| | 94 | 17 |
| 1809-801-280-00 | 82 | 57 |
| | 83 | 57 |
| | 84 | 39 |
| | 85 | 39 |
| 1809-901-064-00 | 95 | 4 |
| | 96 | 4 |
| 1813-104-222-00 | 9 | 3 |
| 1813-104-223-00 | 9 | 2 |
| 1815-912-001-00 | 102 | 1 |
| 1816-111-650-00 | 11 | 7 |
| 1817-650-441-00 | 86 | 6 |
| 1817-650-443-00 | 86 | 5 |
| 1817-652-001-10 | 86 | 37 |
| 1817-902-032-00 | 80 | 3 |
| 1817-904-004-00 | 98 | 12 |
| | 99 | 12 |
| 1825-127-300-00 | 32 | 6 |
| 1825-127-302-00 | 111 | 1 |
| 1825-127-303-00 | 111 | 2 |
| 1825-127-304-00 | 111 | 3 |
| 1825-127-305-00 | 111 | 9 |
| 1825-127-306-00 | 111 | 14 |
| 1825-127-307-00 | 111 | 12 |
| 1825-408-210-00 | 66 | 9 |
| 1832-101-610-00 | 1 | 1 |
| 1832-101-620-00 | 1 | 2 |
| 1832-101-640-10 | 1 | 9 |
| 1832-101-640-20 | 1 | 9-A |
| 1832-101-650-00 | 1 | 12 |
| 1832-101-650-10 | 1 | 12-A |
| 1832-101-660-00 | 1 | 13 |
| 1832-101-660-10 | 1 | 13-A |
| 1832-101-670-10 | 1 | 10 |
| 1832-101-670-20 | 1 | 10-A |
| 1832-101-710-00 | 2 | 1 |
| 1832-101-720-00 | 2 | 2 |
| 1832-102-051-10 | 4 | 8 |
| 1832-102-052-00 | 4 | 9 |
| 1832-102-062-00 | 3 | 8 |
| 1832-102-062-10 | 3 | 8-A |
| 1832-102-063-00 | 3 | 9 |
| 1832-102-063-10 | 3 | 9-A |
| 1832-102-065-00 | 3 | 37 |
| | 4 | 36 |
| 1832-102-220-00 | 3 | 3 |
| | 4 | 3 |
| 1832-102-220-10 | 3 | 3-A |
| | 4 | 3-A |
| 1832-102-230-30 | 4 | 25 |
| 1832-102-310-10 | 3 | 6 |
| 1832-102-320-00 | 4 | 6 |
| 1832-102-330-00 | 3 | 1 |
| | 4 | 1 |
| 1832-102-410-00 | 3 | 6-A |
| 1832-102-610-00 | 3 | 16 |
| 1832-102-620-10 | 3 | 26 |
| 1832-102-710-00 | 4 | 16 |
| 1832-103-003-00 | 5 | 2 |
| 1832-103-053-00 | 5 | 11 |
| 1832-103-500-10 | 5 | 1 |
| 1832-103-500-20 | 5 | 1-A |
| 1832-103-510-10 | 5 | 5 |
| 1832-103-610-00 | 6 | 5 |
| 1832-103-660-00 | 6 | 1 |
| 1832-104-002-00 | 7 | 10 |
| 1832-104-051-00 | 7 | 7 |
| | 9 | 8 |
| 1832-104-061-00 | 8 | 9 |
| 1832-104-062-00 | 8 | 16 |
| 1832-104-063-00 | 8 | 10 |
| 1832-104-064-00 | 8 | 14 |
| 1832-104-066-00 | 9 | 11 |
| 1832-104-220-00 | 9 | 1 |
| 1832-104-600-00 | 8 | 1 |
| 1832-104-600-10 | 8 | 1-A |

# Numerical Index



| Part Code | Fig. | Key | Part Code | Fig. | Key | Part Code | Fig. | Key |
|---|---|---|---|---|---|---|---|---|
| 1832-104-610-00 | 8 | 19 | 1832-204-002-00 | 23 | 4 | 1832-272-001-10 | 37 | 23 |
| 1832-105-001-00 | 10 | 15 | | 32 | 1 | 1832-272-003-00 | 37 | 12 |
| 1832-105-002-10 | 10 | 13 | 1832-204-003-00 | 23 | 6 | | 37 | 28 |
| 1832-105-061-00 | 11 | 13 | 1832-213-001-00 | 25 | 6 | 1832-272-210-00 | 37 | 4 |
| 1832-105-610-00 | 11 | 2 | 1832-213-002-00 | 25 | 3 | 1832-272-220-10 | 37 | 18 |
| 1832-105-620-00 | 11 | 4 | 1832-213-210-00 | 25 | 9 | 1832-272-250-00 | 37 | 31 |
| 1832-111-001-00 | 12 | 1 | 1832-213-210-10 | 25 | 9-A | 1832-272-260-10 | 37 | 10 |
| 1832-111-061-00 | 13 | 13 | 1832-213-900-00 | 25 | 1 | 1832-272-270-10 | 37 | 26 |
| 1832-111-067-00 | 13 | 1 | 1832-214-001-00 | 26 | 1 | 1832-306-001-00 | 38 | 1 |
| 1832-112-061-00 | 14 | 3 | 1832-216-210-10 | 28 | 1 | 1832-306-002-10 | 38 | 3 |
| 1832-112-071-00 | 15 | 3 | 1832-216-220-00 | 28 | 6 | 1832-306-210-00 | 38 | 12 |
| 1832-112-510-00 | 15 | 8 | 1832-218-061-00 | 29 | 5 | 1832-307-001-00 | 39 | 5 |
| 1832-112-520-00 | 15 | 6 | 1832-218-610-00 | 29 | 1 | 1832-307-002-00 | 39 | 13 |
| 1832-112-600-00 | 14 | 10 | 1832-241-001-00 | 30 | 1 | 1832-307-061-00 | 39 | 20 |
| 1832-117-210-00 | 16 | 1 | | 31 | 1 | 1832-307-610-00 | 39 | 19 |
| 1832-117-210-10 | 16 | 1-A | 1832-244-001-00 | 32 | 3 | 1832-310-001-10 | 40 | 1 |
| 1832-117-220-00 | 16 | 3 | 1832-244-002-00 | 32 | 11 | 1832-310-210-00 | 40 | 4 |
| 1832-117-230-00 | 16 | 8 | 1832-244-003-00 | 32 | 21 | 1832-310-250-00 | 40 | 10 |
| 1832-118-210-10 | 18 | 1 | 1832-244-004-00 | 32 | 18 | 1832-310-270-00 | 40 | 6 |
| 1832-120-061-00 | 19 | 4-A | 1832-244-004-10 | 32 | 18-A | 1832-312-002-00 | 41 | 18 |
| | 20 | 7-A | 1832-244-005-00 | 32 | 13 | 1832-312-003-00 | 41 | 24 |
| 1832-120-064-00 | 19 | 7 | 1832-244-006-00 | 32 | 26 | 1832-312-210-00 | 41 | 7 |
| | 20 | 12 | 1832-244-007-00 | 32 | 28 | 1832-312-220-00 | 41 | 1 |
| 1832-120-067-00 | 20 | 9-A | 1832-244-200-00 | 32 | 7 | 1832-312-230-00 | 41 | 13 |
| 1832-120-210-10 | 19 | 1 | 1832-244-200-10 | 32 | 7-A | 1832-312-240-10 | 41 | 21 |
| 1832-120-211-00 | 19 | 2 | 1832-244-230-10 | 32 | 23 | 1832-312-240-20 | 41 | 21-A |
| | 20 | 2 | 1832-245-001-00 | 33 | 3 | 1832-312-260-00 | 41 | 31 |
| 1832-120-212-00 | 19 | 3 | | 34 | 3 | | 42 | 11 |
| 1832-120-610-10 | 20 | 1 | 1832-245-061-10 | 33 | 1 | 1832-312-270-20 | 41 | 27 |
| 1832-120-610-20 | 20 | 1-A | | 34 | 1 | 1832-312-280-00 | 41 | 10 |
| 1832-120-610-30 | 20 | 1-B | 1832-245-061-20 | 33 | 1-A | 1832-313-001-10 | 42 | 16 |
| 1832-120-611-00 | 20 | 4 | | 34 | 1-A | 1832-313-230-00 | 42 | 13 |
| 1832-120-612-00 | 20 | 2-A | 1832-245-062-00 | 33 | 6 | 1832-313-600-00 | 42 | 7 |
| 1832-120-612-10 | 20 | 3 | 1832-245-063-00 | 33 | 12 | 1832-313-610-00 | 42 | 10 |
| 1832-120-620-00 | 20 | 2-B | 1832-245-064-00 | 34 | 6 | 1832-313-610-10 | 42 | 10-A |
| 1832-120-623-00 | 20 | 5 | 1832-245-620-00 | 34 | 12 | 1832-317-200-10 | 43 | 1 |
| 1832-120-624-00 | 20 | 6 | 1832-246-210-00 | 35 | 1 | 1832-317-230-00 | 43 | 3 |
| 1832-201-001-10 | 21 | 1 | 1832-271-001-10 | 36 | 29 | 1832-405-001-10 | 46 | 12 |
| 1832-201-002-10 | 21 | 2 | 1832-271-002-00 | 36 | 16 | | 47 | 15 |
| 1832-201-003-00 | 21 | 3 | 1832-271-210-00 | 36 | 1 | 1832-405-210-00 | 46 | 1 |
| 1832-201-600-00 | 21 | 10 | 1832-271-230-00 | 36 | 9 | | 47 | 1 |
| 1832-203-001-00 | 22 | 1 | 1832-271-240-10 | 36 | 7 | 1832-405-230-20 | 46 | 3 |
| 1832-203-001-10 | 22 | 1-A | 1832-271-260-00 | 36 | 11 | 1832-405-240-10 | 46 | 5 |
| 1832-204-001-00 | 23 | 1 | 1832-271-610-00 | 36 | 25 | 1832-405-250-00 | 46 | 11 |
| 1832-204-001-10 | 23 | 1-A | 1832-272-001-10 | 37 | 7 | | 47 | 14 |

# Numerical Index



| Part Code | Fig. | Key |
|---|---|---|
| 1832-405-260-10 | 46 | 7 |
| | 47 | 10 |
| 1832-405-610-00 | 47 | 7 |
| 1832-405-610-10 | 47 | 7-A |
| 1832-405-620-00 | 47 | 3 |
| 1832-405-630-00 | 47 | 5 |
| 1832-407-900-00 | 49 | 1 |
| 1832-407-900-10 | 49 | 1-A |
| 1832-408-001-00 | 50 | 12 |
| 1832-408-610-00 | 50 | 16 |
| 1832-410-061-00 | 51 | 11 |
| | 51 | 23 |
| 1832-410-290-00 | 86 | 35 |
| | 87 | 21 |
| 1832-410-450-20 | 52 | 21 |
| 1832-410-610-20 | 51 | 21 |
| 1832-410-610-30 | 51 | 21-A |
| 1832-410-620-00 | 51 | 19 |
| 1832-410-630-10 | 51 | 1 |
| 1832-410-640-00 | 51 | 25 |
| 1832-410-640-10 | 51 | 25-A |
| 1832-410-650-10 | 51 | 7 |
| 1832-410-650-20 | 51 | 7-A |
| 1832-410-650-30 | 51 | 7-B |
| 1832-410-650-40 | 51 | 7-C |
| 1832-410-670-00 | 51 | 29 |
| 1832-410-680-00 | 51 | 15 |
| | 52 | 10 |
| 1832-410-690-00 | 51 | 8 |
| | 52 | 7 |
| 1832-410-710-10 | 52 | 17 |
| 1832-410-710-20 | 52 | 17-A |
| 1832-410-710-30 | 52 | 17-B |
| 1832-410-720-00 | 52 | 14 |
| 1832-410-730-00 | 52 | 19 |
| 1832-410-740-10 | 52 | 5 |
| 1832-410-740-20 | 52 | 5-A |
| 1832-410-740-30 | 52 | 5-B |
| 1832-410-750-10 | 52 | 1 |
| 1832-411-003-00 | 53 | 20 |
| | 54 | 20 |
| | 55 | 15 |
| | 56 | 15 |
| 1832-411-004-00 | 53 | 22 |
| | 54 | 22 |
| 1832-411-004-00 | 55 | 17 |
| | 56 | 17 |
| 1832-411-005-00 | 55 | 19 |
| 1832-411-005-10 | 55 | 19-A |
| 1832-411-006-10 | 56 | 19 |
| 1832-411-061-00 | 53 | 17 |
| | 54 | 17 |
| 1832-411-063-00 | 53 | 24 |
| 1832-411-063-10 | 53 | 24-A |
| 1832-411-064-00 | 53 | 7 |
| | 54 | 7 |
| 1832-411-066-00 | 53 | 1 |
| | 54 | 1 |
| 1832-411-066-10 | 53 | 1-A |
| | 54 | 1-A |
| 1832-411-068-00 | 54 | 24 |
| 1832-411-068-10 | 54 | 24-A |
| 1832-411-068-20 | 54 | 24-B |
| 1832-411-073-00 | 55 | 13 |
| | 56 | 13 |
| 1832-411-074-10 | 55 | 3 |
| | 56 | 3 |
| 1832-411-076-00 | 55 | 21 |
| | 56 | 21 |
| 1832-411-630-00 | 53 | 4 |
| | 54 | 4 |
| 1832-411-630-10 | 53 | 4-A |
| | 54 | 4-A |
| 1832-411-640-00 | 53 | 9 |
| | 54 | 9 |
| 1832-411-640-10 | 53 | 9-A |
| | 54 | 9-A |
| 1832-411-650-00 | 53 | 12 |
| | 54 | 12 |
| 1832-411-660-00 | 53 | 26 |
| | 54 | 26 |
| 1832-411-710-10 | 55 | 1 |
| | 56 | 1 |
| 1832-411-720-00 | 55 | 10 |
| | 56 | 10 |
| 1832-411-740-00 | 55 | 6 |
| | 56 | 6 |
| 1832-412-001-10 | 57 | 7 |
| 1832-412-002-00 | 57 | 8 |
| 1832-412-210-20 | 57 | 1 |
| 1832-412-230-20 | 57 | 4 |
| 1832-430-001-00 | 58 | 7 |
| 1832-430-210-00 | 58 | 1 |
| 1832-430-220-00 | 58 | 4 |
| 1832-430-230-00 | 58 | 12 |
| 1832-431-001-00 | 59 | 15 |
| | 60 | 15 |
| 1832-431-002-00 | 59 | 19 |
| | 60 | 19 |
| 1832-431-003-00 | 59 | 3 |
| | 60 | 3 |
| 1832-431-004-00 | 59 | 8 |
| | 60 | 8 |
| 1832-431-005-00 | 59 | 9 |
| | 60 | 9 |
| 1832-431-006-00 | 59 | 12 |
| | 60 | 12 |
| 1832-431-007-10 | 59 | 25 |
| | 60 | 25 |
| 1832-431-210-00 | 59 | 1 |
| 1832-431-220-00 | 59 | 23 |
| | 60 | 23 |
| 1832-431-230-10 | 59 | 30 |
| 1832-431-610-00 | 60 | 1 |
| 1832-433-200-00 | 61 | 18 |
| 1832-433-250-00 | 61 | 60 |
| 1832-434-001-10 | 61 | 28 |
| 1832-434-002-00 | 61 | 31 |
| 1832-434-003-10 | 61 | 56 |
| 1832-434-004-10 | 61 | 55 |
| 1832-434-101-00 | 61 | 41 |
| 1832-434-102-00 | 61 | 38 |
| 1832-441-200-00 | 63 | 1 |
| 1832-441-230-00 | 63 | 3 |
| 1832-503-001-00 | 64 | 18 |
| 1832-503-002-00 | 64 | 31 |
| | 64 | 42 |
| 1832-503-003-00 | 64 | 4 |
| 1832-503-004-00 | 64 | 45 |
| 1832-503-210-00 | 64 | 3 |
| 1832-503-220-10 | 64 | 10 |
| 1832-503-230-10 | 64 | 21 |
| 1832-503-240-10 | 64 | 34 |
| 1832-503-250-10 | 64 | 1 |
| 1832-503-270-10 | 64 | 23 |

# Numerical Index



| Part Code | Fig. | Key |
|---|---|---|
| 1832-503-270-10 | 64 | 35 |
| 1832-503-280-10 | 64 | 49 |
| 1832-503-610-00 | 64 | 21-A |
| 1832-504-610-00 | 65 | 10 |
| 1832-508-210-10 | 66 | 4 |
| | 67 | 4 |
| 1832-508-610-00 | 65 | 11 |
| | 66 | 19 |
| | 67 | 18 |
| 1832-509-002-00 | 68 | 33 |
| 1832-509-003-00 | 68 | 16 |
| 1832-509-230-00 | 68 | 30 |
| 1832-509-240-00 | 68 | 51 |
| 1832-509-270-00 | 68 | 27 |
| 1832-509-320-00 | 68 | 14 |
| 1832-509-350-00 | 68 | 54 |
| 1832-509-610-00 | 68 | 6 |
| 1832-509-620-00 | 68 | 15 |
| 1832-509-630-10 | 68 | 50 |
| 1832-509-640-00 | 68 | 11 |
| | 69 | 2 |
| | 70 | 2 |
| 1832-510-001-10 | 70 | 27 |
| 1832-510-061-00 | 69 | 8 |
| | 70 | 8 |
| 1832-510-061-10 | 69 | 8-A |
| | 70 | 8-A |
| 1832-510-220-00 | 69 | 22 |
| | 70 | 23 |
| 1832-510-620-00 | 69 | 25 |
| | 70 | 26 |
| 1832-510-630-10 | 69 | 26 |
| 1832-601-610-10 | 72 | 1 |
| 1832-603-001-10 | 73 | 4 |
| 1832-606-002-00 | 74 | 9 |
| 1832-606-061-00 | 74 | 1 |
| 1832-611-210-10 | 75 | 1 |
| 1832-611-211-00 | 75 | 2 |
| 1832-611-212-00 | 75 | 3 |
| 1832-611-213-00 | 75 | 5 |
| 1832-611-214-00 | 75 | 6 |
| 1832-611-215-00 | 75 | 7 |
| 1832-611-216-00 | 75 | 8 |
| 1832-611-217-00 | 75 | 9 |
| 1832-611-218-00 | 75 | 10 |
| 1832-611-219-00 | 75 | 11 |
| 1832-611-221-00 | 75 | 12 |
| 1832-611-222-00 | 75 | 13 |
| 1832-611-223-00 | 75 | 14 |
| 1832-611-224-00 | 75 | 16 |
| 1832-611-225-00 | 75 | 17 |
| 1832-611-226-00 | 75 | 18 |
| 1832-611-227-00 | 75 | 19 |
| 1832-611-228-00 | 75 | 20 |
| 1832-611-229-00 | 75 | 21 |
| 1832-611-231-00 | 75 | 22 |
| 1832-611-232-00 | 75 | 25 |
| 1832-611-233-00 | 75 | 26 |
| 1832-611-234-00 | 75 | 27 |
| 1832-611-235-00 | 75 | 28 |
| 1832-611-236-00 | 75 | 29 |
| 1832-611-237-00 | 75 | 30 |
| 1832-611-238-00 | 75 | 24 |
| 1832-611-239-00 | 75 | 4 |
| 1832-611-241-00 | 75 | 23 |
| 1832-630-001-10 | 76 | 1 |
| 1832-630-061-00 | 76 | 4 |
| 1832-650-061-00 | 77 | 32 |
| 1832-650-210-00 | 77 | 1 |
| | 78 | 1 |
| | 79 | 1 |
| 1832-650-660-10 | 77 | 18 |
| | 78 | 18 |
| | 79 | 18 |
| 1832-650-660-20 | 77 | 18-A |
| | 78 | 18-A |
| | 79 | 18-A |
| 1832-670-061-00 | 80 | 27 |
| 1832-670-201-00 | 81 | 22 |
| 1832-670-202-00 | 80 | 23 |
| 1832-670-320-00 | 80 | 22 |
| | 81 | 12 |
| 1832-670-330-00 | 81 | 13 |
| 1832-670-340-00 | 81 | 14 |
| 1832-670-610-00 | 80 | 4 |
| 1832-670-810-00 | 81 | 1 |
| 1832-680-230-00 | 82 | 49 |
| | 83 | 49 |
| | 84 | 31 |
| | 85 | 31 |
| 1832-690-061-10 | 86 | 28 |
| 1832-690-062-00 | 86 | 29 |
| 1832-690-210-00 | 87 | 27 |
| 1832-690-320-00 | 86 | 28-A |
| 1832-690-600-10 | 86 | 1 |
| 1832-690-600-20 | 86 | 1-A |
| 1832-690-600-30 | 86 | 1-B |
| 1832-690-602-10 | 86 | 2 |
| 1832-690-603-00 | 86 | 3 |
| 1832-690-604-00 | 86 | 7 |
| | 87 | 4 |
| 1832-690-650-00 | 86 | 33 |
| 1832-690-800-20 | 87 | 1 |
| 1832-690-802-10 | 87 | 2 |
| 1832-690-803-00 | 87 | 3 |
| 1832-690-900-00 | 86 | 24 |
| 1832-695-001-00 | 88 | 10 |
| | 89 | 5 |
| 1832-695-061-00 | 89 | 3 |
| 1832-695-062-00 | 89 | 5-A |
| 1832-695-200-10 | 88 | 5 |
| 1832-695-200-20 | 88 | 5-A |
| 1832-695-210-20 | 88 | 1 |
| 1832-695-210-30 | 88 | 1-A |
| 1832-695-210-40 | 88 | 1-B |
| 1832-695-250-10 | 88 | 7 |
| | 89 | 10 |
| 1832-695-600-10 | 89 | 8 |
| 1832-695-600-20 | 89 | 8-A |
| 1832-695-600-30 | 89 | 8-B |
| 1832-695-610-10 | 89 | 1 |
| 1832-695-610-20 | 89 | 1-A |
| 1832-695-610-30 | 89 | 1-B |
| 1832-701-610-00 | 90 | 1 |
| 1832-701-620-00 | 90 | 8 |
| 1832-701-810-00 | 91 | 1 |
| 1832-701-830-00 | 91 | 8 |
| 1832-702-002-00 | 92 | 2 |
| 1832-702-210-00 | 92 | 1 |
| 1832-702-250-00 | 92 | 5 |
| 1832-702-251-00 | 92 | 6 |
| 1832-801-210-30 | 93 | 1 |
| | 94 | 1 |
| 1832-801-220-10 | 93 | 3 |
| 1832-801-230-00 | 93 | 7 |

# Numerical Index



| Part Code | Fig. | Key |
|---|---|---|
| 1832-801-230-00 | 94 | 7 |
| 1832-801-250-00 | 93 | 14 |
| | 94 | 14 |
| 1832-801-610-10 | 94 | 3 |
| 1832-901-061-00 | 95 | 1 |
| | 96 | 1 |
| 1832-901-062-00 | 95 | 2 |
| | 96 | 2 |
| 1832-901-063-00 | 95 | 3 |
| 1832-901-083-00 | 96 | 3 |
| 1832-902-001-10 | 97 | 4 |
| 1832-902-002-10 | 97 | 5 |
| 1832-902-005-00 | 97 | 3-A |
| 1832-904-061-00 | 100 | 2 |
| 1832-904-062-00 | 100 | 3 |
| 1832-904-062-10 | 100 | 3-A |
| 1832-923-600-00 | 103 | 1 |
| 1832-923-610-00 | 103 | 6 |
| 1836-432-211-00 | 61 | 2 |
| 1836-432-212-00 | 61 | 14 |
| 1836-432-213-00 | 61 | 29 |
| | 61 | 52 |
| 1836-432-214-00 | 61 | 32 |
| | 61 | 51 |
| 1836-432-215-00 | 61 | 34 |
| 1836-432-216-00 | 61 | 35 |
| 1836-432-217-00 | 61 | 46 |
| 1837-652-600-00 | 80 | 21 |
| | 81 | 11 |
| 1848-105-270-00 | 11 | 7-A |
| 1848-652-230-00 | 80 | 24 |
| 1848-652-240-00 | 80 | 25 |
| 1848-904-001-10 | 98 | 4 |
| | 99 | 4 |
| 1855-904-001-00 | 98 | 5-B |
| | 99 | 5-B |
| 2130-713-002-10 | 17 | 8 |
| 2139-505-002-00 | 3 | 21 |
| 2144-419-022-00 | 36 | 13 |
| | 36 | 27 |
| 2144-519-009-10 | 41 | 38 |
| 2145-586-002-00 | 64 | 12 |
| | 64 | 24 |
| | 64 | 36 |
| 2173-820-003-00 | 16 | 2-A |
| 2173-820-003-00 | 17 | 5-A |
| 2186-536-212-00 | 80 | 12 |
| | 81 | 17 |
| 2213-312-013-00 | 19 | 6 |
| | 20 | 9 |
| | 59 | 2 |
| | 60 | 2 |
| 2232-536-008-00 | 80 | 9 |
| 2500-210-016-00 | 36 | 15 |
| 2500-901-027-00 | 100 | 1 |
| | 101 | 1 |
| 2504-135-008-10 | 36 | 12 |
| | 36 | 26 |
| 2514-102-008-00 | 55 | 11 |
| | 56 | 11 |
| 2515-665-210-00 | 82 | 41 |
| | 83 | 41 |
| | 84 | 23 |
| | 85 | 23 |
| 2521-730-025-00 | 55 | 5 |
| | 56 | 5 |
| 2522-410-301-00 | 49 | 2 |
| 3104-210-004-10 | 41 | 37 |
| 3504-418-007-10 | 36 | 30 |
| 3533-901-012-00 | 95 | 6 |
| | 96 | 6 |
| 3600-211-002-00 | 59 | 27 |
| | 60 | 27 |
| 3610-631-002-00 | 53 | 14 |
| | 54 | 14 |
| | 55 | 7 |
| | 56 | 7 |
| 3621-702-003-00 | 93 | 18 |
| | 94 | 18 |
| | 103 | 5 |
| 3623-150-003-10 | 1 | 4 |
| | 1 | 15 |
| | 2 | 4 |
| 3623-263-001-10 | 1 | 8 |
| | 2 | 8 |
| 3626-370-005-00 | 66 | 8 |
| | 67 | 8 |
| 3640-547-007-00 | 106 | 28 |
| 3642-496-007-10 | 82 | 61 |
| | 83 | 61 |
| 3642-496-007-10 | 84 | 43 |
| | 85 | 43 |
| 3650-261-001-00 | 50 | 17 |
| | 51 | 5 |
| | 51 | 13 |
| | 51 | 27 |
| | 86 | 40 |
| | 86 | 42 |
| | 87 | 25 |
| 3650-261-221-00 | 86 | 20 |
| | 87 | 15 |
| 3650-262-202-00 | 86 | 19 |
| | 87 | 14 |
| 3650-270-214-00 | 81 | 20 |
| 3656-585-001-00 | 64 | 48 |
| 3666-202-005-10 | 10 | 16 |
| | 11 | 14 |
| | 17 | 2 |
| | 47 | 8 |
| | 58 | 3 |
| | 88 | 2 |
| 3670-236-003-00 | 72 | 2 |
| | 74 | 12 |
| 3768-185-015-20 | 69 | 6 |
| | 70 | 6 |
| 3768-185-022-20 | 65 | 7 |
| 3805-371-007-00 | 70 | 28 |
| 3814-354-015-10 | 67 | 13 |
| 3817-116-005-00 | 25 | 7 |
| 3821-262-202-00 | 86 | 11 |
| | 87 | 8 |
| 3821-262-203-00 | 86 | 12 |
| | 87 | 9 |
| 3821-262-204-00 | 86 | 13 |
| | 87 | 10 |
| 3821-262-205-00 | 86 | 14 |
| 3821-262-209-00 | 86 | 15 |
| | 87 | 11 |
| 3824-232-021-00 | 73 | 3 |
| | 76 | 3 |
| 3824-247-202-00 | 86 | 10 |
| | 87 | 7 |
| 3824-247-204-00 | 86 | 16 |
| | 87 | 12 |
| 3829-248-003-00 | 90 | 6 |

# Numerical Index



| Part Code | Fig. | Key |
|---|---|---|
| 3829-248-003-00 | 91 | 6 |
| 3829-260-303-00 | 87 | 5 |
| 3829-282-610-00 | 82 | 47 |
| | 82 | 65 |
| | 83 | 47 |
| | 84 | 29 |
| | 84 | 47 |
| | 85 | 29 |
| 3829-311-200-10 | 10 | 9 |
| 3829-387-410-00 | 68 | 9 |
| 3843-261-200-20 | 80 | 10 |
| | 81 | 15 |
| 3843-261-201-00 | 80 | 11 |
| | 80 | 13 |
| | 81 | 16 |
| | 81 | 24 |
| 3853-350-001-00 | 19 | 4 |
| | 20 | 7 |
| | 20 | 7-B |
| 3864-351-200-00 | 67 | 9 |
| 4101-102-038-00 | 3 | 25 |
| | 4 | 24 |
| 4319-312-003-00 | 37 | 21 |
| | 41 | 4 |
| 4335-512-004-00 | 77 | 29 |
| | 78 | 29 |
| | 79 | 29 |
| 6209-000-055-00 | 63 | 6 |
| 6901-911-020-00 | 2 | 3 |
| 6901-911-025-00 | 5 | 6 |
| 6901-931-225-00 | 1 | 3 |
| | 6 | 6 |
| | 51 | 3 |
| | 51 | 9 |
| | 51 | 9-A |
| | 51 | 20 |
| | 52 | 3 |
| | 52 | 8 |
| | 52 | 8-A |
| | 52 | 16 |
| | 77 | 19 |
| | 78 | 19 |
| | 79 | 19 |
| 6901-931-235-00 | 1 | 14-A |
| | 51 | 10 |
| 6901-931-235-00 | 51 | 10-A |
| | 51 | 18 |
| | 52 | 9 |
| | 52 | 9-A |
| | 52 | 13 |
| | 103 | 7 |
| 7827-205-010-00 | 39 | 18 |
| 8650-203-001-10 | 71 | 2 |
| | 71 | 4 |
| 8654-501-043-00 | 93 | 11 |
| | 94 | 11 |
| 8663-201-004-00 | 25 | 11 |
| 8663-201-005-00 | 25 | 8 |
| | 25 | 12 |
| 8664-555-003-00 | 65 | 12 |
| | 69 | 1 |
| | 70 | 1 |
| 8664-905-003-10 | 98 | 9 |
| | 99 | 9 |
| 8664-955-002-10 | 98 | 10 |
| | 99 | 10 |
| 8669-865-003-00 | 93 | 15 |
| | 94 | 15 |
| 8671-657-003-00 | 82 | 25 |
| | 82 | 27 |
| | 82 | 29 |
| | 82 | 31 |
| | 83 | 25 |
| | 83 | 27 |
| | 83 | 29 |
| | 83 | 31 |
| J061-116-025-00 | 8 | 15 |
| | 66 | 16 |
| | 67 | 15 |
| J061-230-038-00 | 3 | 11 |
| | 4 | 11 |
| J061-236-044-00 | 3 | 10 |
| | 4 | 10 |
| J061-247-055-00 | 7 | 9 |
| | 8 | 11 |
| | 9 | 10 |
| J061-252-063-00 | 7 | 8 |
| | 7 | 11 |
| | 9 | 9 |
| | 9 | 12 |
| J061-269-080-00 | 8 | 12 |
| | 8 | 17 |
| J062-087-093-00 | 10 | 14 |
| J062-111-120-00 | 10 | 12 |
| J062-119-126-00 | 10 | 6 |
| | 10 | 8 |
| | 11 | 6 |
| | 11 | 9 |
| | 11 | 12 |
| J062-126-134-00 | 11 | 3 |
| | 11 | 5 |
| | 11 | 5-A |
| | 11 | 8 |
| | 11 | 8-A |
| | 11 | 11 |
| | 11 | 11-A |
| J062-138-148-00 | 21 | 9 |
| J062-147-159-00 | 3 | 13 |
| | 4 | 13 |
| K167-005-000-20 | 50 | 1 |
| K167-005-001-10 | 50 | 3 |
| K167-005-200-10 | 50 | 2 |
| K167-005-300-10 | 50 | 4 |
| K167-005-310-10 | 50 | 7 |
| K182-007-002-00 | 65 | 3 |
| K182-012-001-10 | 65 | 2 |
| K182-013-000-30 | 65 | 1 |
| K182-013-000-40 | 65 | 1-A |
| K182-034-002-00 | 50 | 5 |
| | 50 | 8 |
| K182-034-003-00 | 50 | 6 |
| | 50 | 9 |
| K200-152-110-20 | 68 | 18 |
| K200-282-000-00 | 68 | 17 |
| K220-002-000-00 | 69 | 18 |
| | 70 | 19 |
| K250-090-002-00 | 68 | 28 |
| K250-090-003-00 | 68 | 29 |
| K275-001-003-00 | 68 | 2 |
| | 106 | 22 |
| K290-001-001-00 | 68 | 23 |
| K290-001-002-00 | 68 | 24 |
| K290-001-003-00 | 68 | 25 |
| K290-003-000-30 | 68 | 21 |
| K500-006-006-10 | 106 | 4 |

# Numerical Index




| Part Code | Fig. | Key |
|---|---|---|
| K500-006-015-00 | 106 | 11 |
| K500-006-017-00 | 106 | 13 |
| K500-006-300-10 | 106 | 3 |
| K500-007-039-00 | 106 | 45 |
| K500-008-000-20 | 24 | 1 |
| K500-008-000-30 | 24 | 1-A |
| K500-008-000-40 | 24 | 1-B |
| K500-008-001-00 | 106 | 1 |
| K500-008-004-00 | 106 | 2 |
| K500-008-004-10 | 106 | 2-A |
| K500-008-012-00 | 106 | 7 |
| K500-008-023-00 | 106 | 19 |
| K500-008-026-00 | 106 | 20 |
| K500-008-034-00 | 106 | 30 |
| K500-008-035-00 | 106 | 31 |
| K500-008-100-20 | 106 | 35 |
| K500-008-100-30 | 106 | 35-A |
| K500-008-610-00 | 106 | 8 |
| K510-001-010-00 | 106 | 5 |
| K510-001-011-00 | 106 | 6 |
| K510-001-016-00 | 106 | 12 |
| K510-001-020-00 | 106 | 14 |
| K510-001-029-00 | 106 | 21 |
| K510-001-036-00 | 106 | 33 |
| K510-001-039-00 | 106 | 29 |
| K510-003-021-00 | 106 | 15 |
| K510-003-022-00 | 106 | 16 |
| K510-003-301-00 | 106 | 39 |
| K510-003-303-00 | 106 | 41 |
| K510-003-304-00 | 106 | 42 |
| K510-005-023-00 | 106 | 18 |
| K510-018-302-00 | 106 | 40 |
| K510-026-037-00 | 106 | 17 |
| P103-521-006-10 | 68 | 42 |
| | 69 | 14 |
| | 70 | 15 |
| P103-521-007-00 | 66 | 13 |
| P113-201-007-00 | 77 | 24 |
| | 78 | 24 |
| | 79 | 24 |
| P113-211-300-00 | 66 | 17 |
| V111-165-001-20 | 82 | 26 |
| | 83 | 26 |
| | 84 | 3 |
| | 85 | 3 |
| V111-176-002-50 | 77 | 31 |
| | 79 | 31 |
| V120-265-001-60 | 90 | 7 |
| | 91 | 7 |
| V120-363-001-60 | 86 | 38 |
| V120-364-001-20 | 17 | 17 |
| V120-365-002-00 | 17 | 14 |
| V120-366-001-20 | 3 | 27 |
| | 4 | 26 |
| V120-366-002-00 | 72 | 3 |
| V120-366-002-50 | 74 | 13 |
| V195-164-008-30 | 81 | 10 |
| V200-260-605-00 | 93 | 12 |
| | 94 | 12 |
| V201-260-803-50 | 3 | 23 |
| | 4 | 22 |
| V201-260-806-50 | 10 | 2 |
| V201-260-807-50 | 68 | 38 |
| V201-260-808-00 | 68 | 39 |
| | 80 | 6 |
| V201-260-810-50 | 38 | 9 |
| V201-261-003-50 | 17 | 7 |
| | 46 | 8 |
| | 47 | 11 |
| V201-360-804-00 | 59 | 29 |
| | 60 | 29 |
| V201-360-804-50 | 37 | 33 |
| V201-360-812-00 | 22 | 5 |
| V201-361-203-50 | 104 | 2 |
| V201-361-206-00 | 103 | 3 |
| V201-461-003-50 | 61 | 67 |
| V201-461-603-50 | 90 | 2 |
| | 90 | 9 |
| | 91 | 2 |
| | 91 | 9 |
| V201-700-802-50 | 6 | 13 |
| V203-361-003-00 | 5 | 3 |
| V210-360-601-60 | 3 | 5 |
| | 3 | 7 |
| | 4 | 5 |
| | 4 | 7 |
| | 82 | 48 |
| | 82 | 52 |
| | 82 | 56 |
| | 82 | 64 |
| V210-360-601-60 | 82 | 66 |
| | 83 | 48 |
| | 83 | 52 |
| | 83 | 56 |
| | 83 | 64 |
| | 84 | 20 |
| | 84 | 30 |
| | 84 | 34 |
| | 84 | 38 |
| | 84 | 46 |
| | 84 | 48 |
| | 85 | 20 |
| | 85 | 30 |
| | 85 | 34 |
| | 85 | 38 |
| | 85 | 46 |
| | 86 | 32 |
| | 86 | 46-A |
| V210-360-602-00 | 68 | 5 |
| | 86 | 39 |
| | 87 | 19 |
| V210-360-603-50 | 68 | 3 |
| | 89 | 14 |
| V211-260-801-60 | 16 | 12 |
| | 17 | 3 |
| | 21 | 12 |
| | 69 | 7 |
| | 70 | 7 |
| V211-260-802-00 | 38 | 7 |
| | 74 | 4 |
| V211-360-801-60 | 6 | 4 |
| | 10 | 17 |
| | 11 | 15 |
| | 14 | 9 |
| | 15 | 7 |
| | 35 | 6 |
| | 37 | 3 |
| | 37 | 17 |
| | 51 | 6 |
| | 51 | 12 |
| | 51 | 14 |
| | 51 | 24 |
| | 51 | 28 |
| | 52 | 20 |
| | 53 | 3 |

# Numerical Index




| Part Code | Fig. | Key |
|---|---|---|
| V211-360-801-60 | 53 | 6 |
| | 53 | 8 |
| | 53 | 13 |
| | 53 | 16 |
| | 53 | 19 |
| | 53 | 21 |
| | 53 | 23 |
| | 53 | 25 |
| | 53 | 27 |
| | 54 | 3 |
| | 54 | 6 |
| | 54 | 8 |
| | 54 | 13 |
| | 54 | 16 |
| | 54 | 19 |
| | 54 | 21 |
| | 54 | 23 |
| | 54 | 25 |
| | 54 | 27 |
| | 55 | 2 |
| | 55 | 9 |
| | 55 | 12 |
| | 55 | 14 |
| | 55 | 16 |
| | 55 | 18 |
| | 55 | 20 |
| | 55 | 22 |
| | 56 | 2 |
| | 56 | 9 |
| | 56 | 12 |
| | 56 | 14 |
| | 56 | 16 |
| | 56 | 18 |
| | 56 | 20 |
| | 56 | 22 |
| | 57 | 3 |
| | 57 | 6 |
| | 74 | 11 |
| | 77 | 34 |
| | 86 | 34 |
| | 86 | 36 |
| | 86 | 46 |
| | 87 | 22 |
| V211-360-802-00 | 3 | 17 |
| | 4 | 17 |
| V211-360-802-00 | 6 | 2 |
| | 7 | 6 |
| | 9 | 7 |
| | 70 | 13 |
| | 86 | 41 |
| | 86 | 43 |
| V211-360-802-50 | 8 | 8 |
| | 11 | 1 |
| V211-361-002-50 | 66 | 3 |
| | 66 | 7 |
| | 67 | 3 |
| | 67 | 7 |
| V211-361-003-00 | 12 | 2 |
| | 13 | 2 |
| V211-560-801-60 | 65 | 9 |
| | 71 | 6 |
| | 71 | 8 |
| V211-560-802-00 | 37 | 32 |
| V211-561-002-00 | 38 | 13 |
| | 41 | 30 |
| V211-561-002-50 | 42 | 15 |
| V211-561-003-00 | 38 | 11 |
| | 50 | 13 |
| | 64 | 2 |
| V211-561-004-00 | 50 | 14 |
| V211-660-801-60 | 50 | 18 |
| V211-660-802-00 | 36 | 8 |
| | 51 | 30 |
| | 52 | 22 |
| | 64 | 50 |
| V211-660-802-50 | 5 | 7 |
| | 6 | 8 |
| | 75 | 31 |
| V211-660-803-50 | 48 | 4 |
| | 49 | 5 |
| | 59 | 22 |
| | 60 | 22 |
| V211-661-002-50 | 43 | 7 |
| | 51 | 2 |
| | 51 | 22 |
| | 52 | 2 |
| | 52 | 18 |
| | 61 | 62 |
| V211-661-003-00 | 32 | 25 |
| V220-541-003-50 | 106 | 34 |
| V230-360-601-00 | 64 | 16 |
| | 64 | 28 |
| | 64 | 40 |
| V230-360-601-20 | 35 | 2 |
| | 35 | 4 |
| V230-360-601-60 | 77 | 17 |
| | 78 | 17 |
| | 79 | 17 |
| V231-360-801-60 | 3 | 15 |
| | 4 | 15 |
| | 8 | 20 |
| | 27 | 7 |
| | 42 | 6 |
| | 46 | 6 |
| | 47 | 6 |
| | 47 | 9 |
| | 59 | 26 |
| | 59 | 31 |
| | 60 | 26 |
| | 76 | 2 |
| V231-360-802-00 | 41 | 26 |
| V231-360-802-50 | 21 | 5 |
| | 30 | 3 |
| | 31 | 3 |
| | 32 | 20 |
| V231-360-804-00 | 22 | 3 |
| | 38 | 6 |
| V231-361-002-00 | 41 | 9 |
| | 46 | 2 |
| | 47 | 2 |
| V231-361-007-00 | 77 | 2 |
| | 78 | 2 |
| | 79 | 2 |
| V231-361-202-00 | 93 | 2 |
| | 94 | 2 |
| V251-341-002-00 | 39 | 23 |
| V251-341-203-20 | 51 | 4 |
| | 52 | 4 |
| V301-260-006-00 | 14 | 4 |
| | 15 | 4 |
| | 17 | 20 |
| | 68 | 4 |
| | 93 | 13 |
| | 94 | 13 |
| V304-260-008-00 | 36 | 17 |

# Numerical Index




| Part Code | Fig. | Key |
|---|---|---|
| V304-260-008-00 | 36 | 19 |
| | 36 | 24 |
| | 41 | 34 |
| | 59 | 28 |
| | 60 | 28 |
| | 66 | 12 |
| | 67 | 12 |
| | 71 | 13 |
| | 92 | 13 |
| | 93 | 6 |
| | 94 | 6 |
| | 110 | 6 |
| V304-260-010-00 | 16 | 7 |
| | 17 | 11 |
| | 46 | 9 |
| | 47 | 12 |
| V304-260-012-00 | 1 | 5 |
| | 1 | 16 |
| | 2 | 5 |
| V304-260-016-00 | 71 | 11 |
| V304-460-008-00 | 37 | 35 |
| V304-460-010-00 | 43 | 6 |
| | 61 | 66 |
| V304-460-012-00 | 36 | 32 |
| | 51 | 17 |
| | 52 | 12 |
| V305-260-012-00 | 36 | 6 |
| | 105 | 3 |
| V327-261-216-00 | 61 | 64 |
| V327-262-110-00 | 62 | 7 |
| V360-260-004-00 | 12 | 6 |
| | 13 | 6 |
| V360-260-005-00 | 17 | 15 |
| | 82 | 2 |
| | 82 | 4 |
| | 82 | 6 |
| | 82 | 8 |
| | 82 | 10 |
| | 82 | 12 |
| | 82 | 14 |
| | 82 | 28 |
| | 82 | 30 |
| | 82 | 32 |
| | 83 | 2 |
| | 83 | 4 |
| V360-260-005-00 | 83 | 6 |
| | 83 | 8 |
| | 83 | 10 |
| | 83 | 12 |
| | 83 | 14 |
| | 83 | 28 |
| | 83 | 30 |
| | 83 | 32 |
| | 84 | 2 |
| | 84 | 14 |
| | 85 | 2 |
| | 85 | 14 |
| | 89 | 16 |
| V360-260-006-00 | 10 | 10 |
| | 14 | 5 |
| | 15 | 5 |
| | 82 | 34 |
| | 82 | 36 |
| | 82 | 38 |
| | 82 | 40 |
| | 82 | 53 |
| | 83 | 34 |
| | 83 | 36 |
| | 83 | 38 |
| | 83 | 40 |
| | 83 | 53 |
| | 84 | 16 |
| | 84 | 18 |
| | 84 | 22 |
| | 84 | 35 |
| | 85 | 16 |
| | 85 | 18 |
| | 85 | 22 |
| | 85 | 35 |
| | 86 | 25 |
| | 86 | 27 |
| | 86 | 31 |
| | 87 | 18 |
| | 87 | 20 |
| | 88 | 9 |
| | 89 | 4 |
| | 89 | 9 |
| | 89 | 12 |
| V362-260-008-00 | 3 | 18 |
| | 3 | 39 |
| V362-260-008-00 | 4 | 18 |
| | 4 | 38 |
| | 13 | 15 |
| | 14 | 11 |
| | 15 | 9 |
| | 36 | 34 |
| | 51 | 26 |
| | 53 | 15 |
| | 54 | 15 |
| | 55 | 8 |
| | 56 | 8 |
| | 69 | 13 |
| | 70 | 14 |
| | 72 | 12 |
| | 82 | 58 |
| | 83 | 58 |
| | 84 | 40 |
| | 85 | 40 |
| | 86 | 30 |
| | 87 | 26 |
| | 88 | 3 |
| | 88 | 6 |
| | 88 | 11 |
| | 89 | 2 |
| | 89 | 6 |
| | 93 | 4 |
| | 94 | 4 |
| V362-260-010-00 | 36 | 10 |
| | 58 | 2 |
| V363-260-008-00 | 72 | 7 |
| V401-160-006-00 | 17 | 19 |
| V401-160-008-00 | 10 | 3 |
| | 22 | 4 |
| | 26 | 4 |
| | 36 | 23 |
| | 38 | 8 |
| | 66 | 11 |
| | 67 | 11 |
| | 68 | 40 |
| | 80 | 8 |
| | 110 | 5 |
| V401-160-010-00 | 5 | 4 |
| | 19 | 5 |
| | 20 | 8 |
| | 20 | 10 |

# Numerical Index




| Part Code | Fig. | Key |
|---|---|---|
| V401-160-010-00 | 43 | 5 |
| | 59 | 11 |
| | 60 | 11 |
| | 62 | 8 |
| V401-160-012-00 | 1 | 6 |
| | 1 | 17 |
| | 2 | 6 |
| | 36 | 5 |
| | 36 | 31 |
| | 51 | 16 |
| | 52 | 11 |
| | 103 | 4 |
| | 104 | 3 |
| V401-160-014-00 | 63 | 5 |
| V401-160-016-00 | 71 | 10 |
| | 90 | 3 |
| | 90 | 10 |
| | 91 | 3 |
| | 91 | 10 |
| V401-700-008-00 | 6 | 12 |
| V411-260-004-00 | 80 | 16 |
| | 81 | 27 |
| V411-260-005-00 | 64 | 8 |
| V411-260-006-00 | 16 | 9 |
| | 28 | 2 |
| | 37 | 5 |
| | 37 | 19 |
| | 41 | 2 |
| | 41 | 14 |
| | 41 | 28 |
| | 64 | 13 |
| | 64 | 25 |
| | 64 | 37 |
| | 77 | 28 |
| | 78 | 28 |
| | 79 | 28 |
| | 93 | 9 |
| | 94 | 9 |
| V411-260-008-00 | 10 | 4 |
| | 18 | 2 |
| | 28 | 7 |
| | 29 | 2 |
| | 36 | 35 |
| | 37 | 8 |
| | 37 | 13 |
| V411-260-008-00 | 37 | 24 |
| | 37 | 29 |
| | 41 | 11 |
| | 41 | 19 |
| | 41 | 39 |
| | 42 | 8 |
| | 42 | 17 |
| | 58 | 10 |
| | 58 | 13 |
| | 64 | 19 |
| | 64 | 32 |
| | 64 | 43 |
| | 68 | 41 |
| | 80 | 7 |
| | 110 | 4 |
| V411-260-010-00 | 16 | 6 |
| | 17 | 10 |
| | 43 | 4 |
| | 58 | 5 |
| | 59 | 10 |
| | 60 | 10 |
| | 64 | 5 |
| | 64 | 46 |
| V411-260-012-00 | 1 | 7 |
| | 2 | 7 |
| | 72 | 5 |
| | 104 | 4 |
| V411-260-014-00 | 63 | 4 |
| V411-260-016-00 | 61 | 63 |
| | 71 | 9 |
| | 92 | 4 |
| V411-260-022-00 | 28 | 4 |
| | 41 | 16 |
| | 41 | 22 |
| V411-700-008-00 | 6 | 9 |
| V500-162-002-00 | 64 | 14 |
| | 64 | 26 |
| | 64 | 38 |
| V500-162-501-50 | 16 | 10 |
| V500-162-502-00 | 18 | 3 |
| | 28 | 8 |
| | 29 | 3 |
| | 36 | 36 |
| | 37 | 9 |
| | 37 | 14 |
| V500-162-502-00 | 37 | 25 |
| | 37 | 30 |
| | 41 | 12 |
| | 41 | 20 |
| | 41 | 40 |
| | 42 | 9 |
| | 42 | 18 |
| | 58 | 6 |
| | 58 | 11 |
| | 58 | 15 |
| | 62 | 9 |
| V500-162-502-50 | 64 | 6 |
| | 64 | 47 |
| V500-164-003-00 | 61 | 65 |
| V500-164-004-00 | 41 | 23 |
| V523-100-801-60 | 24 | 2 |
| | 26 | 3 |
| V523-101-002-20 | 21 | 4 |
| | 22 | 2 |
| | 30 | 2 |
| | 31 | 2 |
| | 32 | 19 |
| | 38 | 5 |
| | 38 | 10 |
| | 59 | 21 |
| | 60 | 21 |
| V530-160-803-20 | 41 | 32 |
| | 42 | 12 |
| V560-160-005-00 | 64 | 9 |
| V560-160-008-00 | 64 | 20 |
| | 64 | 33 |
| | 64 | 44 |
| V580-140-301-80 | 58 | 9 |
| V600-110-600-50 | 33 | 4 |
| | 33 | 9 |
| | 34 | 4 |
| | 34 | 9 |
| V600-110-600-60 | 23 | 7 |
| V600-110-600-80 | 39 | 11 |
| V600-110-600-90 | 26 | 13 |
| V600-110-620-30 | 32 | 9 |
| V600-110-620-40 | 32 | 5 |
| | 32 | 8 |
| | 32 | 14 |
| | 33 | 2 |

# Numerical Index




| Part Code | Fig. | Key |
|---|---|---|
| V600-110-620-40 | 33 | 13 |
| | 34 | 2 |
| | 34 | 13 |
| | 59 | 16 |
| | 60 | 16 |
| V600-110-620-50 | 23 | 2 |
| | 23 | 5 |
| | 32 | 2 |
| | 32 | 12 |
| | 39 | 2 |
| | 39 | 6 |
| V600-110-620-60 | 32 | 4 |
| | 39 | 15 |
| V600-110-620-70 | 33 | 14 |
| | 34 | 14 |
| V600-110-630-50 | 25 | 10 |
| | 106 | 10 |
| V600-111-600-40 | 33 | 10 |
| | 34 | 10 |
| V600-150-620-10 | 36 | 4 |
| V704-140-016-00 | 40 | 3 |
| V704-140-017-00 | 32 | 10 |
| V704-140-018-00 | 36 | 14 |
| | 36 | 28 |
| V704-140-020-00 | 33 | 11 |
| | 34 | 11 |
| V704-140-022-00 | 28 | 5 |
| | 37 | 22 |
| | 40 | 9 |
| | 41 | 5 |
| | 41 | 17 |
| V704-140-025-00 | 39 | 10 |
| | 106 | 25 |
| V704-140-030-00 | 25 | 5 |
| | 39 | 22 |
| | 111 | 10 |
| V705-140-032-00 | 106 | 27 |
| V705-140-034-00 | 32 | 15 |
| V705-140-045-00 | 59 | 5 |
| | 60 | 5 |
| V705-140-047-00 | 59 | 18 |
| | 60 | 18 |
| V705-140-052-00 | 32 | 29 |
| | 39 | 3 |
| | 39 | 7 |
| V707-140-062-00 | 25 | 14 |
| V707-140-072-00 | 31 | 4 |
| | 33 | 15 |
| | 34 | 15 |
| V720-102-401-00 | 107 | 2 |
| V720-102-401-80 | 40 | 8 |
| V720-102-402-00 | 92 | 10 |
| V720-103-502-40 | 27 | 4 |
| | 59 | 24 |
| | 60 | 24 |
| V720-103-504-40 | 107 | 6 |
| V720-111-900-70 | 68 | 36 |
| V720-111-901-00 | 106 | 43 |
| V720-112-401-10 | 66 | 18 |
| | 67 | 17 |
| | 68 | 8 |
| | 68 | 10 |
| | 68 | 13 |
| | 68 | 45 |
| | 68 | 49 |
| | 68 | 53 |
| | 68 | 56 |
| | 106 | 24 |
| V720-112-401-20 | 68 | 35 |
| | 106 | 36 |
| V720-112-401-40 | 68 | 31 |
| | 68 | 32 |
| | 68 | 43 |
| | 69 | 11 |
| | 69 | 15 |
| | 69 | 17 |
| | 69 | 19 |
| | 69 | 21 |
| | 69 | 24 |
| | 70 | 11 |
| | 70 | 16 |
| | 70 | 18 |
| | 70 | 20 |
| | 70 | 22 |
| | 70 | 25 |
| | 106 | 23 |
| V720-112-401-50 | 24 | 5 |
| V720-112-401-60 | 68 | 20 |
| V720-112-401-80 | 66 | 14 |
| | 106 | 38 |
| V720-112-402-00 | 68 | 22 |
| V720-112-402-20 | 68 | 19 |
| V721-103-103-50 | 66 | 6 |
| | 67 | 6 |
| V721-103-104-50 | 66 | 2 |
| | 66 | 5 |
| | 67 | 2 |
| | 67 | 5 |
| V721-103-105-00 | 24 | 3 |
| V721-103-106-00 | 106 | 32 |
| V721-103-106-50 | 59 | 7 |
| | 60 | 7 |
| V721-103-107-00 | 24 | 4 |
| V723-102-002-90 | 21 | 11 |
| V723-102-003-40 | 32 | 17 |
| V723-102-004-20 | 50 | 11 |
| V723-102-005-00 | 81 | 21 |
| V723-112-003-80 | 50 | 10 |
| V724-124-304-20 | 65 | 5 |
| V730-101-601-20 | 106 | 37 |
| V730-104-804-20 | 65 | 6 |
| V744-120-350-70 | 59 | 17 |
| | 60 | 17 |
| V744-120-400-80 | 39 | 17 |
| V744-120-420-80 | 23 | 3 |
| V744-125-450-80 | 59 | 6 |
| | 60 | 6 |
| V744-130-450-80 | 39 | 4 |
| | 39 | 8 |
| V760-150-000-00 | 28 | 3 |
| | 37 | 6 |
| | 37 | 20 |
| | 41 | 3 |
| | 41 | 15 |
| | 41 | 29 |
| | 61 | 61 |
| V780-140-000-1T | 68 | 26 |
| | 106 | 44 |
| V780-140-000-2T | 68 | 37 |
| V782-160-000-2T | 59 | 20 |
| | 60 | 20 |
| V782-160-000-4B | 59 | 4 |
| | 60 | 4 |
| | 61 | 59 |
| V782-160-000-6B | 38 | 2 |

# Numerical Index



| Part Code | Fig. | Key | Part Code | Fig. | Key | Part Code | Fig. | Key |
|---|---|---|---|---|---|---|---|---|
| V782-160-000-8B | 21 | 6 | | | | | | |
| | 38 | 4 | | | | | | |
| V793-142-480-60 | 65 | 4 | | | | | | |
| W201-261-206-00 | 105 | 2 | | | | | | |
| W201-360-807-50 | 37 | 34 | | | | | | |

# Alpabetical Index




| Description | Fig. | Key |
|---|---|---|
| ADAPTER/255X065 ASSY | 23 | 1 |
| ADAPTER/255X085 ASSY | 24 | 1 |
| ARM/CONTROL | 21 | 28 |
| ARM/FLOATING COMP | 21 | 20 |
| ARM/TENSION | 23 | 2 |
| | 24 | 2 |
| BALL, STEEL | 2 | 5 |
| BEARING, RB/6005 | 10 | 45 |
| BEARING, RB/6203 | 21 | 13 |
| BEARING/BALL | 21 | 14 |
| | 31 | 6 |
| | 31 | 11 |
| | 32 | 6 |
| | 32 | 11 |
| BEARING/CONNECTING R | 14 | 7 |
| BEARING/CRANK/LOWER | 6 | 12 |
| BEARING/CRANK/UPPER | 6 | 11 |
| BEARING/CRANKSET | 6 | 10 |
| BEARING/THRUST/CRANK | 6 | 13 |
| | 7 | 2 |
| | 7 | 4 |
| BELT/VNR5A36.5 | 19 | 6 |
| BODY/NOZZLE HOLDER | 29 | 2 |
| BOLT | 2 | 7 |
| | 6 | 2 |
| | 10 | 39 |
| | 12 | 18 |
| | 31 | 9 |
| | 31 | 10 |
| | 31 | 19 |
| | 31 | 20 |
| | 31 | 21 |
| | 31 | 22 |
| | 31 | 24 |
| | 32 | 22 |
| | 32 | 24 |
| BOLT, JOINT | 17 | 8 |
| BOLT, S/M6X12/7T | 13 | 5 |
| | 21 | 16 |
| BOLT, S/M6X25/7T | 17 | 2 |
| BOLT, S/M8X20/7T | 10 | 52 |
| BOLT, S/M8X25/7T | 5 | 3 |
| BOLT, SEMS/M10X20, 7T | 9 | 3 |
| BOLT, SEMS/M10X25, 7T | 25 | 8 |
| BOLT/CONNECTINGROD | 14 | 6 |
| BOLT/CRANK | 16 | 9 |
| BOLT/FLANGE | 16 | 7 |
| BOLT/M6 | 10 | 33 |
| | 10 | 34 |
| BOLT/M6X10 | 21 | 18 |
| BOLT/M8X20/7T | 21 | 8 |
| BOLT/STUD | 32 | 10 |
| BOLT/WASHERHEAD | 30 | 8 |
| BOLT/WS | 19 | 5 |
| BRACKET ROCKER SHAFT | 12 | 12 |
| BRACKET, ROCKER SHAFT | 12 | 13 |
| BRG/CONROD/UN050 SET | 7 | 5 |
| BRG/CONROD/UN100 SET | 7 | 6 |
| BRG/CRANK/UN050 SET | 7 | 1 |
| BRG/CRANK/UN100 SET | 7 | 3 |
| BRUSH | 31 | 17 |
| BRUSH ASSY | 32 | 17 |
| BUSH | 31 | 15 |
| CAMSHAFT/INJECTION P | 21 | 10 |
| CAP, BLANK/30 | 10 | 36 |
| CAP, OIL FILLER | 3 | 2 |
| CAP, SEALING | 2 | 2 |
| CARTRIDGE/OILFILTER | 17 | 10 |
| CLAMP, STRAINER | 17 | 5 |
| CLAMP/WIRE/10-15 | 18 | 11 |
| CLIP/HOSE/7.6-8.2 | 22 | 5 |
| COLLAR/SPACE | 32 | 3 |
| COLLOR | 31 | 3 |
| CONNECTINGROD ASSY | 14 | 5 |
| CONNECTOR, OIL FILTER | 6 | 24 |
| CONNECTOR/FUEL | 22 | 1 |
| CONNECTOR/GLOWPLUG | 26 | 5 |
| CORRUGATEDTUBE | 22 | 6 |
| COVER, BEARING | 31 | 5 |
| COVER/BEARING | 32 | 5 |
| COVER/CYLINDER HEAD | 3 | 1 |
| COVER/END/REAR | 31 | 13 |
| COVER/END/RR | 32 | 13 |
| COVER/HYDRAULIC | 10 | 48 |
| COVER/INJECTIONPUMP | 6 | 25 |
| CRANKSHAFT ASSY | 16 | 1 |
| CUP/SEALING/12 | 6 | 7 |
| CUP/SEALING/16 | 10 | 3 |
| CUP/SEALING/28 | 6 | 3 |
| CUP/SEALING/36 | 6 | 4 |
| CUTTER, VALVE | 12 | 5 |
| CYLINDERBLOCK ASSY | 6 | 1 |
| | 6 | 1-A |
| | 6 | 1-B |
| CYLINDERHEAD ASSY | 2 | 1 |
| | 2 | 1-A |
| DOWEL | 6 | 21 |
| ELEMENT ASSY | 30 | 7 |
| FAN/COOLING | 19 | 1 |
| FLANGEBOLT/M10X20 | 11 | 2 |
| FLANGEBOLT/M10X70 | 25 | 5 |
| FLANGEBOLT/M6X10 | 8 | 4 |
| FLANGEBOLT/M6X12 | 6 | 27 |
| FLANGEBOLT/M6X16 | 26 | 8 |
| FLANGEBOLT/M8X12 | 6 | 32 |
| FLANGEBOLT/M8X16 | 10 | 11 |
| | 17 | 6 |
| FLANGEBOLT/M8X20 | 4 | 3 |
| | 18 | 8 |
| | 18 | 14 |
| | 25 | 3 |
| FLANGEBOLT/M8X25 | 18 | 19 |
| FLANGEBOLT/M8X30 | 10 | 15 |
| FLANGEBOLT/M8X45 | 10 | 12 |
| | 18 | 3 |
| FLANGEBOLT/M8X50 | 12 | 19 |
| FLANGEBOLT/M8X55 | 10 | 9 |
| FLANGEBOLT/M8X75 | 10 | 13 |
| | 18 | 15 |
| FLANGEBOLT/M8X85 | 10 | 8 |
| FLYWEIGHT | 21 | 17 |
| FLYWHEEL ASSY | 16 | 5 |
| FRAME/DRIVEEND ASSY | 31 | 7 |
| | 32 | 7 |
| FRAME/END/REAR | 31 | 12 |
| FRAME/END/RR | 32 | 12 |
| GASKET | 3 | 5 |
| | 28 | 5 |
| GASKET, EXH. MANIFOLD | 5 | 2 |
| | 28 | 7 |
| GASKET, INLET MANIFOL | 4 | 2 |
| | 28 | 6 |
| GASKET, NOZZLE | 20 | 3 |
| GASKET/COVER | 6 | 26 |
| | 10 | 49 |

# Alpabetical Index




| Description | Fig. | Key |
|---|---|---|
| GASKET/COVER | 26 | 7 |
| | 28 | 11 |
| | 28 | 22 |
| GASKET/CYLINDERHEAD | 2 | 6 |
| | 28 | 3 |
| GASKET/DELIVERYVALVE | 30 | 4 |
| GASKET/GEARCASE | 10 | 27 |
| | 28 | 14 |
| GASKET/HOUSING | 18 | 13 |
| | 28 | 20 |
| GASKET/PLATE | 10 | 38 |
| | 28 | 15 |
| GASKET/SPACER | 18 | 6 |
| | 28 | 19 |
| GASKET/WATERPUMP | 18 | 2 |
| | 28 | 18 |
| GEAR/CAMSHAFT | 13 | 2 |
| GEAR/CRANK | 16 | 3 |
| GEAR/IDLE ASSY | 13 | 6 |
| GEAR/INJECTIONPUMP | 21 | 11 |
| GEARCASE ASSY | 10 | 1 |
| | 10 | 1-A |
| | 10 | 1-B |
| GENERATOR ASSY | 25 | 1 |
| | 25 | 1-A |
| GLOWPLUG | 26 | 4 |
| GUIDE/LEVELGAGE COMP | 6 | 30 |
| HANGER | 11 | 1 |
| HARNESS/OILPRESSURE | 26 | 3 |
| HOLDER/BRUSH ASSY | 31 | 16 |
| | 32 | 16 |
| HOLDER/DELIVERYVALVE | 30 | 2 |
| HOLDER/JE/9-9 | 6 | 31 |
| | 10 | 14 |
| HOLDER/NOZZLE ASSY | 29 | 1 |
| HOLDER/RECTIFIE ASSY | 31 | 14 |
| | 32 | 14 |
| HOSE/RUBBER | 3 | 6 |
| | 18 | 10 |
| | 22 | 3 |
| HOUSING ASSY | 30 | 6 |
| HOUSING/THERMOSTAT | 18 | 12 |
| INJECTIONNOZZLE ASSY | 20 | 1 |
| INJECTIONPUMP ASSY | 21 | 1 |
| INSULATIONBRUSH | 32 | 15 |
| KEY/07X05X09 | 13 | 3 |
| | 21 | 12 |
| KEY/07X05X20 | 16 | 4 |
| LEVELGAGE | 6 | 29 |
| LEVER/CONTROL COMP | 21 | 25 |
| MANIFOLD(INLET) ASSY | 4 | 1 |
| MANIFOLD,EXH | 5 | 1 |
| NIPPLE | 6 | 22 |
| NOZZLE ASSY | 29 | 51 |
| NUT | 12 | 17 |
| | 29 | 50 |
| | 31 | 2 |
| | 31 | 23 |
| | 31 | 25 |
| | 32 | 2 |
| | 32 | 23 |
| | 32 | 25 |
| NUT/CAP | 3 | 4 |
| | 10 | 19 |
| NUT/FLANGE/M10 | 25 | 6 |
| NUT/M08 | 10 | 10 |
| | 12 | 20 |
| | 18 | 4 |
| | 18 | 9 |
| | 21 | 9 |
| NUT/M6 | 10 | 35 |
| | 21 | 29 |
| NUT/M8 | 10 | 18 |
| | 10 | 46 |
| | 10 | 50 |
| NUT/NOZZLERETAINING | 29 | 5 |
| OILPAN COMP | 8 | 1 |
| OILPUMP ASSY | 17 | 1 |
| | 17 | 1-A |
| ORING | 30 | 3 |
| O-RING/1A,P15 | 17 | 4 |
| | 28 | 17 |
| O-RING/1A,P18 | 8 | 3 |
| | 10 | 32 |
| O-RING/1A,P8 | 21 | 26 |
| O-RING/1A,S50 | 10 | 41 |
| | 28 | 16 |
| O-RING/1A,S55 | 18 | 18 |
| | 28 | 21 |
| PACKING | 10 | 20 |
| PACKING | 17 | 9 |
| | 28 | 13 |
| PIECE,DISTANCE | 29 | 6 |
| PIN | 6 | 17 |
| | 6 | 28 |
| | 10 | 23 |
| PIN,CONTROL | 21 | 22 |
| PIN,GROOVE | 10 | 26 |
| PIN,NOZZLE HOLDER | 29 | 3 |
| PIN,PISTON | 14 | 3 |
| PIN,ST,B/10X18 | 16 | 2 |
| PIN,ST,B/8X16 | 6 | 16-A |
| PIN/ARM | 10 | 21 |
| PIN/IDLEGEAR | 6 | 6 |
| PIN/INJECTIONPUMP | 30 | 10 |
| PIN/SNAP | 10 | 22 |
| PIN/STRAIGHT | 6 | 16 |
| PIN/TUBE | 6 | 15 |
| | 10 | 42 |
| PIPE/FUEL | 22 | 2 |
| | 22 | 2-A |
| PIPE/INJECTION ASSY | 20 | 4 |
| | 20 | 5 |
| | 20 | 6 |
| PIPE/OIL ASSY | 17 | 7 |
| PIPE/WATEROUTLET | 18 | 17 |
| PISTON | 14 | 1 |
| PISTON(OV/050) | 15 | 1 |
| PISTON(OV/100) | 15 | 3 |
| PISTON/VALVE/RELIEF | 10 | 29 |
| PLATE | 30 | 11 |
| | 31 | 8 |
| PLATE/ADJUST | 25 | 2 |
| PLATE/ADJUSTING | 30 | 9 |
| PLATE/FRONT | 10 | 37 |
| PLATE/REAR | 9 | 1 |
| PLATE/RETAINER | 32 | 8 |
| PLATE/TAPPET/AD 0.2 | 30 | 23 |
| PLATE/TAPPET/AD 0.25 | 30 | 27 |
| PLATE/TAPPET/AD 0.3 | 30 | 24 |
| PLATE/TAPPET/AD 0.35 | 30 | 28 |
| PLATE/TAPPET/AD 0.4 | 30 | 25 |
| PLATE/TAPPET/AD 0.45 | 30 | 29 |
| PLATE/TAPPET/AD 0.5 | 30 | 26 |
| PLATE/TAPPET/AD 0.55 | 30 | 30 |

# Alpabetical Index




| Description | Fig. | Key |
|---|---|---|
| PLATE/TAPPET/AD 0.6 | 30 | 18 |
| PLATE/TAPPET/AD 0.65 | 30 | 31 |
| PLATE/TAPPET/AD 0.7 | 30 | 19 |
| PLATE/TAPPET/AD 0.8 | 30 | 20 |
| PLATE/TAPPET/AD 0.9 | 30 | 21 |
| PLATE/TAPPET/AD 1.0 | 30 | 22 |
| PLATE/THRUST | 13 | 4 |
| PLATE/THRUST/INJECTI | 21 | 15 |
| PLUG | 12 | 11 |
| PLUG/M14X1.5 | 8 | 2 |
| PLUG/PT1/2 | 2 | 3 |
| PLUG/PT1/8 | 6 | 5 |
| | 10 | 2 |
| | 10 | 2-A |
| PLUG/SCREW | 10 | 24 |
| PLUG/SCREW/SEAL | 6 | 23 |
| POINTER | 9 | 2 |
| PULLEY | 31 | 1 |
| | 32 | 1 |
| PULLEY/CRANK | 16 | 8 |
| PULLEY/WATERPUMP | 19 | 2 |
| RACK/CONTROL ASSY | 30 | 13 |
| REGULATOR ASSY | 27 | 1 |
| | 31 | 26 |
| | 32 | 26 |
| REPAIR/ENGINE SET | 28 | 1 |
| RESISTANCE/1.0 | 22 | 4 |
| RING,SNAP | 14 | 4 |
| RING,SNAP/12 C | 10 | 31 |
| RING,SNAP/16 C | 12 | 15 |
| RING,SNAP/4 E | 21 | 23 |
| RING/PISTON SET | 14 | 2 |
| RINGGEAR | 16 | 6 |
| RINGPISTON/OV050 SET | 15 | 2 |
| RINGPISTON/OV100 SET | 15 | 4 |
| RINK/CONTROL | 21 | 21 |
| ROCKERARM | 12 | 9 |
| | 12 | 9-A |
| ROCKERSHAFT ASSY | 12 | 8 |
| | 12 | 8-A |
| ROD,PUSH | 12 | 7 |
| ROTOR ASSY | 31 | 4 |
| | 32 | 4 |
| SCREW | 32 | 9 |
| | 32 | 20 |
| SCREW | 32 | 21 |
| SCREW ADJUST | 12 | 16 |
| SCREW/HOLLOW | 21 | 3 |
| SCREW/W/WASHER | 32 | 19 |
| SEAL,BEARING CAP | 6 | 8 |
| | 28 | 8 |
| SEAL,BEARING CAP/7 | 6 | 9 |
| | 28 | 9 |
| SEAL,CYL.HEAD COVER | 3 | 3 |
| | 28 | 4 |
| SEAL,OIL | 2 | 4 |
| | 6 | 14 |
| | 10 | 7 |
| | 28 | 2 |
| | 28 | 10 |
| | 28 | 12 |
| SEAT/SPRING/LOWER | 30 | 17 |
| SEAT/SPRING/UPPER | 30 | 15 |
| SEAT/VALVESPRING | 12 | 4 |
| SHAFT,CAM | 13 | 1 |
| SHAFT/HYDRAULIC ASSY | 10 | 44 |
| SHAFT/ROCKERARM ASSY | 12 | 10 |
| SHIM/INJECTIONPUMP | 21 | 4 |
| | 21 | 5 |
| | 21 | 6 |
| | 21 | 7 |
| SHORTBLOCKENGIN ASSY | 1 | 1 |
| SLEEVE/PLUNGER | 30 | 14 |
| SOLENOID | 26 | 6 |
| SPACER,PUMP.WATER | 18 | 5 |
| SPACER/FAN | 19 | 3 |
| SPACER/FAN/48 | 19 | 4 |
| SPACER/HYDRAULIC | 10 | 40 |
| SPRING | 12 | 14 |
| | 31 | 18 |
| SPRING,RETURN | 21 | 27 |
| SPRING,STARTING | 21 | 32 |
| SPRING/COMPRESSION C | 32 | 18 |
| SPRING/DELIVERYVALVE | 30 | 1 |
| SPRING/GOVERNOR | 21 | 24 |
| SPRING/NOZZLEHOLDER | 29 | 4 |
| SPRING/PUMPPLUNGER | 30 | 16 |
| SPRING/RELIEF VALVE | 10 | 30 |
| SPRING/VALVE | 12 | 3 |
| STARTER ASSY | 25 | 7 |
| STOPPER/FULLLOAD | 10 | 17 |
| STRAINER | 17 | 3 |
| STUD | 2 | 8 |
| | 6 | 19 |
| | 6 | 20 |
| | 10 | 4 |
| | 10 | 5 |
| | 10 | 6 |
| | 10 | 43 |
| STUD/M8X40 | 6 | 18 |
| | 18 | 7 |
| SWITCH/OILPRESSURE | 26 | 1 |
| | 26 | 1-A |
| TAPPET | 12 | 6 |
| TAPPET/INJECTIO ASSY | 30 | 12 |
| THERMOMETER | 26 | 2 |
| THERMOSTAT | 18 | 16 |
| THRUSTPIECE | 21 | 19 |
| VALVE ASSY | 30 | 5 |
| VALVE/EXHAUST | 12 | 2 |
| VALVE/INTAKE | 12 | 1 |
| VALVE/RELIEF ASSY | 10 | 28 |
| | 10 | 28-A |
| WASHER | 20 | 2 |
| WASHER,PL/M6 | 21 | 30 |
| WASHER,SP/M6 | 21 | 31 |
| WASHER,SP/M8 | 10 | 47 |
| | 10 | 51 |
| WASHER/0.9 | 29 | 7 |
| WASHER/0.925 | 29 | 8 |
| WASHER/0.95 | 29 | 9 |
| WASHER/0.975 | 29 | 10 |
| WASHER/08X14X01 | 10 | 16 |
| | 10 | 25 |
| | 28 | 23 |
| WASHER/1.0 | 29 | 11 |
| WASHER/1.025 | 29 | 12 |
| WASHER/1.05 | 29 | 13 |
| WASHER/1.075 | 29 | 14 |
| WASHER/1.1 | 29 | 15 |
| WASHER/1.125 | 29 | 16 |
| WASHER/1.15 | 29 | 17 |
| WASHER/1.175 | 29 | 18 |
| WASHER/1.2 | 29 | 19 |
| WASHER/1.225 | 29 | 20 |

# Alpabetical Index




| Description | Fig. | Key | Description | Fig. | Key | Description | Fig. | Key |
|---|---|---|---|---|---|---|---|---|
| WASHER/1.25 | 29 | 21 | | | | | | |
| WASHER/1.275 | 29 | 22 | | | | | | |
| WASHER/1.3 | 29 | 23 | | | | | | |
| WASHER/1.325 | 29 | 24 | | | | | | |
| WASHER/1.35 | 29 | 25 | | | | | | |
| WASHER/1.375 | 29 | 26 | | | | | | |
| WASHER/1.4 | 29 | 27 | | | | | | |
| WASHER/1.425 | 29 | 28 | | | | | | |
| WASHER/1.45 | 29 | 29 | | | | | | |
| WASHER/1.475 | 29 | 30 | | | | | | |
| WASHER/1.5 | 29 | 31 | | | | | | |
| WASHER/1.525 | 29 | 32 | | | | | | |
| WASHER/1.55 | 29 | 33 | | | | | | |
| WASHER/1.575 | 29 | 34 | | | | | | |
| WASHER/1.6 | 29 | 35 | | | | | | |
| WASHER/1.625 | 29 | 36 | | | | | | |
| WASHER/1.65 | 29 | 37 | | | | | | |
| WASHER/1.675 | 29 | 38 | | | | | | |
| WASHER/1.7 | 29 | 39 | | | | | | |
| WASHER/1.725 | 29 | 40 | | | | | | |
| WASHER/1.75 | 29 | 41 | | | | | | |
| WASHER/1.775 | 29 | 42 | | | | | | |
| WASHER/1.8 | 29 | 43 | | | | | | |
| WASHER/1.825 | 29 | 44 | | | | | | |
| WASHER/1.85 | 29 | 45 | | | | | | |
| WASHER/1.875 | 29 | 46 | | | | | | |
| WASHER/1.9 | 29 | 47 | | | | | | |
| WASHER/1.925 | 29 | 48 | | | | | | |
| WASHER/1.95 | 29 | 49 | | | | | | |
| WASHER/9X22X2 | 25 | 4 | | | | | | |
| WASHER/AIR BLEEDER | 21 | 2 | | | | | | |
| WASHER/PLATE/COPPER | 10 | 20-A | | | | | | |
| | 17 | 9-A | | | | | | |
| | 28 | 13-A | | | | | | |
| WATERPUMP ASSY | 18 | 1 | | | | | | |

# Alpabetical Index




| Description | Fig. | Key |
|---|---|---|
| BACKLEAKRAIL ASSY | 22 | 3 |
| | 22 | 3-A |
| BALL, STEEL | 2 | 5 |
| BAND | 27 | 8 |
| | 27 | 25 |
| BAND, HARNESS | 27 | 11 |
| | 27 | 30 |
| BAND, WIRE/140 | 27 | 10 |
| BAND, WIRE/250 | 6 | 10 |
| BAND/HARNESS | 12 | 17 |
| | 27 | 25-A |
| BEARING, RB/6005 | 12 | 31 |
| BEARING/CONNECTING R | 16 | 7 |
| BEARING/CRANK/LOWER | 8 | 16 |
| BEARING/CRANK/UPPER | 8 | 15 |
| BEARING/CRANKSET | 8 | 14 |
| BEARING/THRUST/CRANK | 8 | 17 |
| | 9 | 2 |
| | 9 | 4 |
| BELT/VNR5A43.0 | 21 | 5 |
| BOLT | 8 | 2 |
| | 8 | 2-A |
| | 11 | 2 |
| | 14 | 18 |
| | 19 | 17 |
| BOLT, S/M6X12/7T | 15 | 5 |
| BOLT, S/M6X20/7T | 20 | 13 |
| BOLT, SEMS/M12X40/7T | 26 | 18 |
| BOLT/CONNECTINGROD | 16 | 6 |
| BOLT/CRANK | 18 | 9 |
| BOLT/CYLINDERHEAD | 2 | 7 |
| BOLT/FLANGE | 18 | 7 |
| | 26 | 5 |
| BOLT/M10X30/9T, P1.25 | 26 | 10 |
| BOLT/M12X1.5X40 | 11 | 3 |
| BOLT/M5X20 | 27 | 15 |
| BOLT/M8X20/SP/S | 6 | 13 |
| | 20 | 19 |
| BOLT/SUCTION CONTROL | 23 | 7 |
| BRACKET/CONNECTOR | 27 | 27 |
| | 27 | 27-A |
| BRACKET/GENERATOR | 26 | 9 |
| BRACKET/ROCKERSHAFT | 14 | 12 |
| | 14 | 13 |
| BREATHER ASSY | 8 | 40 |
| BRG/CONROD/UN025 SET | 9 | 5 |
| BRG/CONROD/UN050 SET | 9 | 6 |
| BRG/CRANK/UN050 SET | 9 | 1 |
| BRG/CRANK/UN100 SET | 9 | 3 |
| CAMSHAFT | 15 | 1 |
| CAP | 20 | 14 |
| CAP/FUEL COMP | 24 | 2 |
| CAP/HANGER | 26 | 15 |
| CAP/OILFILLER | 3 | 8 |
| | 12 | 12 |
| CARTRIDGE/OILFILTER | 19 | 9 |
| CLAMP, MAIN HARNESS | 4 | 17 |
| | 5 | 17 |
| | 12 | 15 |
| | 26 | 13 |
| CLAMP/HARNESS | 12 | 19 |
| CLAMP/NOZZLEHOLDER | 22 | 10 |
| CLAMP/STRAINER | 19 | 7 |
| CLAMP/WIRE/08-10 | 8 | 45 |
| CLAMP/WIRE/16-20 | 19 | 27 |
| CLAMP/WIRE/18-22 | 20 | 15 |
| CLAMP/WORM/12-20 | 20 | 24 |
| CLAMP/WORM/16-25 | 20 | 21 |
| | 20 | 29 |
| | 20 | 30 |
| CLAMP/WORM/32-51 | 4 | 22 |
| CLAMP/WORM/38-50 | 5 | 22 |
| CLAMP/WORM/60-80 | 4 | 24 |
| | 5 | 24 |
| CLIP | 22 | 9 |
| CLIP ASSY | 22 | 24 |
| | 22 | 25 |
| CLIP/A | 22 | 26 |
| CLIP/HOSE/10.4-11.1 | 22 | 8 |
| | 22 | 23 |
| CLIP/HOSE/12.6-13.4 | 8 | 44 |
| | 25 | 4 |
| CLIP/HOSE/13.8-14.8 | 30 | 11 |
| CLIP/HOSE/18-22 | 8 | 49 |
| | 19 | 27-A |
| | 19 | 31 |
| | 20 | 24-A |
| CLIP/HOSE/23.4-25.4 | 19 | 21 |
| | 20 | 21-A |
| | 20 | 29-A |
| CLIP/HOSE/23.4-25.4 | 20 | 29-B |
| CONECTOR/GLOWPLUG | 27 | 5 |
| CONNECTINGROD ASSY | 16 | 5 |
| CONNECTOR/L | 22 | 4 |
| CONNECTOR/OILCOOLER | 19 | 24 |
| | 19 | 24-A |
| CONNECTOR/T | 22 | 5 |
| COVER/CYLINDER HEAD | 3 | 1 |
| COVER/HARNESS | 12 | 16 |
| COVER/HPP | 12 | 9 |
| CRANKSHAFT ASSY | 18 | 1 |
| CUP/SEALING/12 | 8 | 3 |
| CUP/SEALING/16 | 8 | 4 |
| CUP/SEALING/20 | 2 | 3 |
| | 3 | 2 |
| CUP/SEALING/28 | 4 | 11 |
| | 5 | 11 |
| | 8 | 5 |
| CUP/SEALING/36 | 8 | 6 |
| CUP/SEALING/50 | 2 | 4 |
| | 8 | 7 |
| CUTTER, VALVE | 14 | 5 |
| CYLINDERBLOCK ASSY | 8 | 1 |
| | 8 | 1-A |
| | 8 | 1-B |
| CYLINDERHEAD ASSY | 2 | 1 |
| | 2 | 1-A |
| | 2 | 1-B |
| DPF ASSY | 30 | 3 |
| DPF/MUFFLER COMP | 30 | 1 |
| | 30 | 1-A |
| DRIVESHAFTNUT | 23 | 15 |
| ECU ASSY | 28 | 1 |
| | 28 | 1-A |
| | 28 | 1-B |
| EGRCOOLER COMP | 6 | 11 |
| ELBOW/DPF | 7 | 6 |
| ELEMENT/FUEL ASSY | 24 | 3 |
| ELEMENTKIT | 8 | 41 |
| ENDPLATE ASSY | 30 | 4 |
| EYEBOLT | 19 | 11 |
| | 19 | 13 |
| | 19 | 13-A |
| EYEBOLT/OILJET ASSY | 8 | 29 |
| FAN/COOLING | 21 | 1 |

# Alpabetical Index




| Description | Fig. | Key |
|---|---|---|
| FILTER/FUEL ASSY | 24 | 1 |
| FLANGE/SUPPLYPUMP | 23 | 10 |
| | 23 | 10-A |
| FLANGEBOLT | 4 | 19 |
| | 5 | 19 |
| | 6 | 9 |
| | 22 | 11 |
| | 26 | 8 |
| | 30 | 6 |
| FLANGEBOLT/M6X12 | 4 | 18 |
| | 5 | 18 |
| | 12 | 11 |
| | 12 | 18 |
| | 26 | 14 |
| | 27 | 13 |
| FLANGEBOLT/M6X16 | 8 | 42 |
| FLANGEBOLT/M6X30 | 3 | 6 |
| | 15 | 11 |
| FLANGEBOLT/M6X50 | 21 | 4 |
| FLANGEBOLT/M8X12 | 4 | 3 |
| | 5 | 3 |
| | 6 | 18 |
| | 8 | 47 |
| | 10 | 4 |
| | 12 | 20 |
| | 19 | 15 |
| | 19 | 29 |
| | 20 | 18 |
| | 20 | 26 |
| | 27 | 24 |
| | 27 | 28 |
| FLANGEBOLT/M8X16 | 6 | 20 |
| | 6 | 24 |
| | 12 | 7 |
| | 12 | 25 |
| | 13 | 2 |
| | 19 | 8 |
| | 23 | 16 |
| | 26 | 3 |
| FLANGEBOLT/M8X20 | 6 | 21 |
| | 20 | 7 |
| FLANGEBOLT/M8X25 | 23 | 11 |
| FLANGEBOLT/M8X30 | 4 | 13 |
| | 5 | 13 |
| | 22 | 20 |
| FLANGEBOLT/M8X35 | 4 | 5 |
| | 5 | 5 |
| | 26 | 7 |
| FLANGEBOLT/M8X40 | 12 | 6 |
| FLANGEBOLT/M8X45 | 14 | 19 |
| FLANGEBOLT/M8X50 | 4 | 8 |
| | 5 | 8 |
| FLANGEBOLT/M8X60 | 12 | 3 |
| | 12 | 3-A |
| FLANGEBOLT/M8X65 | 12 | 4 |
| FLANGEBOLT/M8X70 | 15 | 9 |
| | 20 | 8 |
| FLANGEBOLT/M8X75 | 4 | 7 |
| | 5 | 7 |
| FLANGEBOLT/M8X80 | 20 | 3 |
| FLANGEBOLT/M8X85 | 12 | 5 |
| FLANGENUT | 30 | 7 |
| FLYWHEEL ASSY | 18 | 5 |
| | 18 | 5-A |
| | 18 | 5-B |
| | 18 | 5-C |
| GASKET | 7 | 3 |
| | 19 | 12 |
| | 19 | 19 |
| | 19 | 19-A |
| | 22 | 2 |
| | 30 | 5 |
| | 31 | 27 |
| | 31 | 29 |
| GASKET/COVER | 12 | 10 |
| | 31 | 20 |
| GASKET/CYLINDERHEAD | 2 | 6 |
| | 2 | 6-A |
| | 2 | 6-B |
| | 31 | 3 |
| GASKET/DPF | 30 | 8 |
| | 31 | 36 |
| GASKET/EGR/COOLER | 6 | 12 |
| | 31 | 11 |
| GASKET/EGR/PIPE | 6 | 16 |
| | 31 | 12 |
| GASKET/EGRVALVE | 6 | 8 |
| | 31 | 10 |
| GASKET/EXH/DOUBLE | 6 | 4 |
| | 31 | 9 |
| GASKET/EXH/SINGLE | 6 | 3 |
| | 31 | 8 |
| GASKET/EXHAUST | 31 | 13 |
| GASKET/GEARCASE | 12 | 14 |
| | 31 | 21 |
| GASKET/HOUSING | 20 | 6 |
| | 31 | 31 |
| GASKET/INLET | 4 | 12 |
| | 5 | 12 |
| | 31 | 6 |
| GASKET/INLET MANIFOL | 4 | 4 |
| | 5 | 4 |
| GASKET/INLETMANIFOLD | 5 | 4-A |
| | 31 | 5 |
| GASKET/INLETVALVE | 4 | 16 |
| | 5 | 16 |
| | 31 | 7 |
| GASKET/PLATE | 12 | 24 |
| | 31 | 22 |
| GASKET/SPACER | 20 | 2 |
| | 31 | 30 |
| GASKET/THERMOSTAT | 20 | 12 |
| | 31 | 32 |
| GASKET/TURBO | 7 | 7 |
| | 31 | 14 |
| GEAR/CAMSHAFT | 15 | 2 |
| GEAR/CRANKT | 18 | 3 |
| GEAR/HPP | 23 | 14 |
| | 23 | 14-A |
| GEAR/IDLE ASSY | 15 | 6 |
| | 15 | 6-A |
| GEARCASE | 12 | 1 |
| GENERATOR ASSY | 26 | 1 |
| GLOWPLUG | 27 | 3 |
| | 27 | 3-A |
| | 27 | 3-B |
| GUIDE/LEVELGAGE COMP | 8 | 25 |
| HANGER/REAR | 13 | 1 |
| HARNESS,GLOW | 27 | 6 |
| HARNESS/ENGINE ASSY | 27 | 9 |
| HARNESS/ENGINE/E3FH | 27 | 7 |
| HOLDER/JE/9-9 | 4 | 2 |
| | 4 | 14 |
| | 5 | 2 |
| | 5 | 14 |

# Alpabetical Index




| Description | Fig. | Key |
|---|---|---|
| HOLDER/JE/9-9 | 8 | 46 |
| | 13 | 3 |
| HOSE | 22 | 7 |
| | 25 | 3 |
| HOSE/BLOWBY | 8 | 48 |
| HOSE/BREATHER/DRAIN | 8 | 43 |
| HOSE/COOLER/IN | 20 | 27 |
| HOSE/COOLER/OUT | 20 | 28 |
| HOSE/EGRVALVE/IN | 20 | 22 |
| HOSE/EGRVALVE/OUT | 20 | 23 |
| HOSE/LEAK | 22 | 22 |
| HOSE/OILCOOLER/IN | 19 | 26 |
| HOSE/PRESSURESENSOR | 30 | 10 |
| HOSE/RETURN | 20 | 20 |
| HOSE/RUBBER | 4 | 23 |
| | 5 | 23 |
| | 19 | 20 |
| | 19 | 30 |
| HOSE/TURBO | 4 | 21 |
| | 5 | 21 |
| HOUSING/THERMOSTAT | 20 | 5 |
| | 20 | 5-A |
| | 20 | 5-B |
| | 20 | 5-C |
| INJECTIONNOZZLE ASSY | 22 | 1 |
| INJECTIONPUMP ASSY | 23 | 1 |
| INSULATOR/25 | 4 | 9 |
| | 5 | 9 |
| KEY | 23 | 4 |
| KEY/07X05X09 | 15 | 3 |
| KEY/07X05X33.5 | 18 | 4 |
| LABEL/NAME | 29 | 1 |
| LEVELGAUGE | 8 | 26 |
| | 8 | 26-A |
| MANIFOLD/EXHAUST | 6 | 1 |
| | 6 | 1-A |
| MANIFOLD/INLET | 4 | 1 |
| | 5 | 1 |
| MESH | 3 | 3 |
| MONOLITHCATALYS ASSY | 30 | 2 |
| | 30 | 2-A |
| NUT | 14 | 17 |
| NUT,SUS/M8 | 6 | 6 |
| | 7 | 4 |
| | 7 | 8 |
| NUT/FLANGE | 27 | 4 |
| NUT/M08 | 6 | 5-A |
| | 12 | 8 |
| | 20 | 4 |
| NUT/M8 | 12 | 32 |
| | 26 | 6 |
| NUT/M8/7T | 6 | 6-A |
| NUT/WASHER/M6 | 27 | 21 |
| OILCOOLER | 19 | 23 |
| OILCOOLER ASSY | 19 | 23-A |
| OILPAN COMP | 10 | 1 |
| OILPUMP ASSY | 19 | 1 |
| OILSEAL | 8 | 18 |
| | 8 | 18-A |
| | 12 | 2 |
| | 12 | 2-A |
| | 31 | 18 |
| | 31 | 19 |
| O-RING/1A,G95 | 23 | 12 |
| | 31 | 34 |
| O-RING/1A,P11 | 19 | 4 |
| | 31 | 25 |
| O-RING/1A,P18 | 8 | 38 |
| | 10 | 3 |
| | 19 | 6 |
| | 31 | 26 |
| O-RING/1A,P25 | 3 | 9 |
| | 12 | 13 |
| O-RING/1A,S30 | 19 | 3 |
| | 31 | 24 |
| O-RING/1A,S50 | 12 | 27 |
| | 31 | 23 |
| PACKING | 19 | 14 |
| PIN,SPRING/3X12 W | 26 | 12 |
| PIN,ST,B/10X18 | 18 | 2 |
| PIN,ST,B/8X16 | 8 | 19-A |
| | 8 | 20-A |
| | 8 | 23-A |
| PIN/SPRING | 8 | 30 |
| PIN/STRAIGHT | 8 | 19 |
| | 8 | 20 |
| | 8 | 23 |
| PIN/TUBE | 12 | 28 |
| PIPE/BREATHER | 8 | 39 |
| PIPE/EGR COMP | 6 | 15 |
| PIPE/EGR/IN COMP | 20 | 25 |
| PIPE/EGR/OUT COMP | 20 | 16 |
| | 20 | 16-A |
| PIPE/FUEL | 25 | 2 |
| PIPE/INJECTION ASSY | 22 | 13 |
| | 22 | 14 |
| | 22 | 15 |
| | 22 | 16 |
| PIPE/INLET | 4 | 20 |
| | 5 | 20 |
| PIPE/INLET ASSY | 4 | 10 |
| | 5 | 10 |
| PIPE/L COMP | 22 | 21 |
| | 25 | 1 |
| PIPE/OIL ASSY | 19 | 10 |
| PIPE/OIL COMP | 19 | 16 |
| PIPE/OIL/BLOCK COMP | 19 | 22 |
| PIPE/OILCOOLER COMP | 19 | 28 |
| | 19 | 28-A |
| PIPE/OILJET | 8 | 28 |
| PIPE/PRESSURE ASSY | 30 | 9 |
| PIPE/WATER/HOUSING | 8 | 31 |
| PIPE/WATEROUTLET | 20 | 11 |
| PISTON | 16 | 1 |
| PISTON/OV025 | 17 | 1 |
| PISTON/VALVE/RELIEF | 8 | 34 |
| PISTONPIN | 16 | 3 |
| PLATE | 3 | 4 |
| PLATE/ADJUST | 26 | 2 |
| | 26 | 2-A |
| PLATE/CONNECTOR | 27 | 23 |
| | 27 | 29 |
| PLATE/EGR | 6 | 19 |
| PLATE/FRONT | 12 | 23 |
| PLATE/GENERATOR COMP | 26 | 4 |
| PLATE/REAR | 11 | 1 |
| PLATE/THRUST | 15 | 4 |
| PLATE/THRUST/IDLE | 15 | 8 |
| PLUG | 14 | 11 |
| PLUG/LEVELGAUGE | 8 | 27 |
| PLUG/M14X1.5 | 10 | 2 |
| PLUG/M16X1.5 | 20 | 10 |
| PLUG/PT1/2 | 8 | 9 |
| PLUG/PT1/4 | 8 | 10 |
| PLUG/PT1/8 | 8 | 8 |

# Alpabetical Index




| Description | Fig. | Key |
|---|---|---|
| PLUG/PT1/8 | 8 | 8-A |
| PLUG/SCREW/SEAL | 8 | 24 |
| | 8 | 37 |
| PULLEY/CRANK | 18 | 8 |
| | 18 | 8-A |
| PULLEY/WATERPUMP | 21 | 2 |
| PUSHROD | 14 | 7 |
| RAIL ASSY | 22 | 17 |
| REEDVALVE/EGR | 6 | 14 |
| REPAIR/ENGINESET | 31 | 1 |
| RING,SNAP/12 C | 8 | 33 |
| RING/O | 22 | 6 |
| | 22 | 6-A |
| RING/O/EGRPIPE | 20 | 17 |
| | 31 | 33 |
| RING/O/INJECTOR | 22 | 12 |
| RING/O/SENSOR/FUEL T | 23 | 9 |
| RING/O/SUCTION CONTR | 23 | 6 |
| RING/O/SUPPLYPUMP | 23 | 13 |
| | 31 | 35 |
| RING/PISTON/OV025SET | 17 | 2 |
| RING/PISTONSET | 16 | 2 |
| RING/SNAP | 14 | 15 |
| RINGGEAR | 18 | 6 |
| ROCKERARM | 14 | 9 |
| ROCKERSHAFT ASSY | 14 | 8 |
| RUBBER/CLIP | 22 | 27 |
| SCREW,SOCKET/M6X30 | 19 | 2 |
| SCREW/ADJUST | 14 | 16 |
| SCREW/HOLOW/PUMP | 23 | 3 |
| SCREW/HOLOW/RAIL | 22 | 18 |
| SCREW/S | 22 | 28 |
| SCREW/TAPPING | 3 | 5 |
| | 27 | 19 |
| SEAL,BEARING CAP/7 | 8 | 13 |
| | 31 | 17 |
| SEAL,OIL | 2 | 2 |
| | 31 | 2 |
| SEAL/BEARINGCAP | 8 | 11 |
| | 31 | 15 |
| SEAL/BEARINGCAP/14 | 8 | 12 |
| | 31 | 16 |
| SEAL/CYLINDER HEAD C | 3 | 7 |
| | 31 | 4 |
| SEAT/VALVESPRING | 14 | 4 |
| SENSOR/AIRFLOW | 27 | 18 |
| SENSOR/BOOST | 27 | 14 |
| SENSOR/EXHAUST/TEMP | 27 | 26 |
| SENSOR/FUEL TEMPERAT | 23 | 8 |
| SENSOR/PRESSURE/DPF | 27 | 20 |
| SENSOR/RAMBDA | 27 | 22 |
| SENSOR/ROTATIONAL SP | 27 | 12 |
| SENSORWHEEL/CAM | 15 | 10 |
| SENSORWHEEL/CRANK | 18 | 10 |
| SHAFT/HYDRAURIC ASSY | 12 | 30 |
| SHAFT/IDLEGEAR | 15 | 7 |
| SHAFT/ROCKERARM ASSY | 14 | 10 |
| SHORTBLOCKENGIN ASSY | 1 | 1 |
| SIM/RELIEFVALVE | 8 | 35 |
| SNAPRING | 16 | 4 |
| SOLENOID/STARTER | 26 | 17 |
| SPACER/FAN | 21 | 3 |
| SPACER/HYDRAULIC | 12 | 26 |
| SPRING | 14 | 14 |
| SPRING/RELIEF VALVE | 8 | 36 |
| SPRING/VALVE | 14 | 3 |
| STARTER ASSY | 26 | 16 |
| | 26 | 16-A |
| STAY/BREATHER COMP | 4 | 6 |
| | 4 | 6-A |
| | 5 | 6 |
| STAY/EGR COMP | 6 | 17 |
| STRAINER | 19 | 5 |
| STUD | 2 | 8 |
| | 2 | 9 |
| | 2 | 10 |
| | 6 | 2 |
| | 7 | 2 |
| | 8 | 21 |
| | 12 | 21 |
| | 12 | 22 |
| | 12 | 29 |
| STUD/M8X60/7T | 8 | 22 |
| SUCTION CONTROL VALV | 23 | 5 |
| SWITCH/FILTER/FUEL | 24 | 4 |
| SWITCH/OILPRESSURE | 27 | 1 |
| | 27 | 1-A |
| TAPPET | 14 | 6 |
| THERMOMETER | 27 | 2 |
| THERMOSTAT | 20 | 9 |
| THERMOSTAT | 20 | 9-A |
| TURBOCHARGER ASSY | 7 | 1 |
| | 7 | 1-A |
| U-NUT | 6 | 23 |
| VALVE/EGR ASSY | 6 | 7 |
| VALVE/EXHAUST | 14 | 2 |
| VALVE/INLET ASSY | 4 | 15 |
| | 5 | 15 |
| VALVE/INTAKE | 14 | 1 |
| VALVE/RELIEF ASSY | 8 | 32 |
| WASHER | 22 | 19 |
| | 23 | 2 |
| WASHER,PL/M5 | 27 | 16 |
| WASHER,PL/M8 | 6 | 5 |
| | 7 | 5 |
| WASHER,SP/M10 | 26 | 11 |
| WASHER,SP/M12 | 11 | 4 |
| WASHER,SP/M5 | 27 | 17 |
| WASHER,SP/M6 | 19 | 18 |
| WASHER,SP/M8 | 7 | 9 |
| | 12 | 33 |
| WASHER/08X15.5X1.6 | 6 | 22 |
| WASHER/OILCOOLER | 19 | 25 |
| WASHER/PLATE/COPPER | 19 | 14-A |
| | 31 | 28 |
| WATERPUMP ASSY | 20 | 1 |

# Alpabetical Index




| Description | Fig. | Key |
|---|---|---|
| ADAPTER/45ß/R3/8XM20 | 69 | 8 |
| | 69 | 8-A |
| | 70 | 8 |
| | 70 | 8-A |
| ADAPTER/90 | 69 | 6 |
| | 70 | 6 |
| ADAPTER/90DEG/3/8 | 66 | 8 |
| | 67 | 8 |
| ADAPTER/90DEG/PUMP | 65 | 7 |
| ADAPTER/G1/4 | 68 | 16 |
| ADAPTER/G1/4 ASSY | 68 | 7 |
| ADAPTER/G1/4-M1 ASSY | 68 | 52 |
| ADAPTER/G1/4XG3/8 | 68 | 30 |
| ADAPTER/G3/8ASSY | 69 | 16 |
| | 69 | 23 |
| | 70 | 17 |
| | 70 | 24 |
| ADAPTER/L/G1/4 ASSY | 67 | 16 |
| | 68 | 12 |
| ADAPTER/L/G1/4XR1/4 | 50 | 15 |
| ADAPTER/L/G3/8 ASSY | 69 | 10 |
| | 70 | 10 |
| ADAPTER/L/PF1/4 ASSY | 68 | 55 |
| ADAPTER/L/PF3/8 ASSY | 69 | 20 |
| | 70 | 21 |
| ADAPTER/L/PT1/8 | 68 | 46 |
| ADAPTER/PF1/4 ASSY | 68 | 44 |
| | 68 | 48 |
| ADAPTER/PT1/8 | 68 | 47 |
| ADAPTER/T | 65 | 12 |
| | 69 | 1 |
| | 70 | 1 |
| ADAPTOR(G3/8) ASSY | 67 | 13 |
| ADPTER/G1/4.1/4 | 68 | 9 |
| ARM | 82 | 51 |
| | 82 | 55 |
| | 82 | 63 |
| | 83 | 51 |
| | 83 | 55 |
| | 83 | 63 |
| | 84 | 33 |
| | 84 | 37 |
| | 84 | 45 |
| | 85 | 33 |
| | 85 | 37 |

| Description | Fig. | Key |
|---|---|---|
| ARM | 85 | 45 |
| ARM/4WD COMP | 58 | 4 |
| | 59 | 23 |
| | 60 | 23 |
| ARM/BRAKE COMP | 41 | 1 |
| ARM/BRAKE/SHAFT COMP | 41 | 31 |
| | 42 | 11 |
| ARM/COUNTER/BRAKE | 41 | 13 |
| ARM/COUNTER/FRONT | 37 | 10 |
| ARM/COUNTER/REA ASSY | 37 | 26 |
| ARM/DIFF COMP | 27 | 2 |
| ARM/DUMP/COLLECTOR | 64 | 34 |
| ARM/HST ASSY | 36 | 25 |
| ARM/HST/F COMP | 37 | 4 |
| ARM/HST/R COMP | 37 | 18 |
| ARM/LIFT/COLLECTOR | 64 | 21 |
| | 64 | 21-A |
| ARM/LIFT/LH ASSY | 71 | 1 |
| ARM/LIFT/MOWER COMP | 64 | 10 |
| ARM/LIFT/RH ASSY | 71 | 3 |
| ARM/MIRROR ASSY | 77 | 16 |
| | 78 | 16 |
| | 79 | 16 |
| ARM/NEUTRAL ASSY | 36 | 11 |
| ARM/PARKING COMP | 42 | 10 |
| | 42 | 10-A |
| ARM/SENSOR | 17 | 18 |
| ARM/SPOOL COMP | 64 | 3 |
| ARM/TRUNNION COMP | 36 | 1 |
| ARMREST/LH ASSY | 75 | 19 |
| ARMREST/RH ASSY | 75 | 20 |
| BACK ASSY | 75 | 2 |
| BAND | 77 | 23 |
| | 78 | 23 |
| | 79 | 23 |
| | 86 | 21 |
| | 87 | 16 |
| | 92 | 8 |
| BAND,WIRE/140 | 86 | 45 |
| | 87 | 24 |
| BAND,WIRE/250 | 86 | 44 |
| | 87 | 23 |
| BAR/ROCK COMP | 46 | 7 |
| | 47 | 10 |
| BATTERY/55B24R ASSY | 15 | 1 |

| Description | Fig. | Key |
|---|---|---|
| BATTERY/55B24R ASSY | 15 | 1-A |
| BATTERY/80D26R ASSY | 14 | 1 |
| | 14 | 1-A |
| BEARING,RB/16004 | 33 | 10 |
| | 34 | 10 |
| BEARING,RB/6005 | 33 | 4 |
| | 33 | 9 |
| | 34 | 4 |
| | 34 | 9 |
| BEARING,RB/6006 | 23 | 7 |
| BEARING,RB/6008 | 39 | 11 |
| BEARING,RB/6009 | 26 | 13 |
| BEARING,RB/6201SS | 36 | 4 |
| BEARING,RB/6203 | 32 | 9 |
| BEARING,RB/6204 | 32 | 5 |
| | 32 | 8 |
| | 32 | 14 |
| | 33 | 2 |
| | 33 | 13 |
| | 34 | 2 |
| | 34 | 13 |
| | 59 | 16 |
| | 60 | 16 |
| BEARING,RB/6205 | 23 | 2 |
| | 23 | 5 |
| | 32 | 2 |
| | 32 | 12 |
| | 39 | 2 |
| | 39 | 6 |
| BEARING,RB/6206 | 32 | 4 |
| | 39 | 15 |
| BEARING,RB/6207 | 33 | 14 |
| | 34 | 14 |
| BEARING,RB/6305 | 25 | 10 |
| | 106 | 10 |
| BEARING/6010/HCH/C | 61 | 14 |
| BEARING/6205/C&U/C | 61 | 2 |
| BEARING/6205/C&U/C) | 61 | 32 |
| | 61 | 51 |
| BEARING/6206/HCH/C | 61 | 29 |
| | 61 | 52 |
| BEARING/6304/C&U/C | 61 | 46 |
| BEARING/6908/C&U/C) | 61 | 35 |
| BEARING/6909/C&U/C) | 61 | 34 |
| BEARING/BALL | 25 | 2 |

# Alpabetical Index




| Description | Fig. | Key |
|---|---|---|
| BEARING/BALL | 32 | 27 |
| BEARING/BALL/6010C | 26 | 12 |
| BEARING/BALL/HPS | 32 | 28 |
| BELT ASSY | 75 | 14 |
| BLOCK/CYLINDER/HMP1 | 106 | 3 |
| BLOCK/PORT/HMP1/008 | 106 | 2 |
| | 106 | 2-A |
| BODY/VALVE/PTO | 68 | 33 |
| BOLT | 37 | 34 |
| | 63 | 6 |
| | 72 | 4 |
| BOLT, S/M10X20/7T | 38 | 13 |
| | 41 | 30 |
| BOLT, S/M10X25/7T | 42 | 15 |
| BOLT, S/M10X30/7T | 38 | 11 |
| | 50 | 13 |
| | 64 | 2 |
| BOLT, S/M10X40/7T | 50 | 14 |
| BOLT, S/M8X16 | 16 | 12 |
| | 17 | 3 |
| | 21 | 12 |
| | 69 | 7 |
| | 70 | 7 |
| BOLT, S/M8X16/7T | 65 | 9 |
| | 71 | 6 |
| | 71 | 8 |
| BOLT, S/M8X20 | 38 | 7 |
| | 74 | 4 |
| BOLT, S/M8X20/7T | 37 | 32 |
| BOLT, SEMS/M10X20, 7T | 2 | 3 |
| BOLT, SEMS/M10X25, 7T | 5 | 6 |
| BOLT, SEMS/M12X25/7T | 1 | 3 |
| | 6 | 6 |
| | 51 | 3 |
| | 51 | 9 |
| | 51 | 9-A |
| | 51 | 20 |
| | 52 | 3 |
| | 52 | 8 |
| | 52 | 8-A |
| | 52 | 16 |
| | 77 | 19 |
| | 78 | 19 |
| | 79 | 19 |
| BOLT, SEMS/M12X35/7T | 1 | 14-A |
| BOLT, SEMS/M12X35/7T | 51 | 10 |
| | 51 | 10-A |
| | 51 | 18 |
| | 52 | 9 |
| | 52 | 9-A |
| | 52 | 13 |
| | 103 | 7 |
| BOLT, SP/M10X25 | 66 | 3 |
| | 66 | 7 |
| | 67 | 3 |
| | 67 | 7 |
| BOLT, SP/M10X25/7T | 43 | 7 |
| | 51 | 2 |
| | 51 | 22 |
| | 52 | 2 |
| | 52 | 18 |
| | 61 | 62 |
| BOLT, SP/M10X30 | 12 | 2 |
| | 13 | 2 |
| BOLT, SP/M10X30/7T | 32 | 25 |
| BOLT, SP/M6X16 | 3 | 5 |
| | 3 | 7 |
| | 4 | 5 |
| | 4 | 7 |
| | 82 | 48 |
| | 82 | 52 |
| | 82 | 56 |
| | 82 | 64 |
| | 82 | 66 |
| | 83 | 48 |
| | 83 | 52 |
| | 83 | 56 |
| | 83 | 64 |
| | 84 | 20 |
| | 84 | 30 |
| | 84 | 34 |
| | 84 | 38 |
| | 84 | 46 |
| | 84 | 48 |
| | 85 | 20 |
| | 85 | 30 |
| | 85 | 34 |
| | 85 | 38 |
| | 85 | 46 |
| | 86 | 32 |
| BOLT, SP/M6X16 | 86 | 46-A |
| BOLT, SP/M6X20 | 68 | 5 |
| | 86 | 39 |
| | 87 | 19 |
| BOLT, SP/M6X35 | 68 | 3 |
| | 89 | 14 |
| BOLT, SP/M8X16 | 6 | 4 |
| | 10 | 17 |
| | 11 | 15 |
| | 14 | 9 |
| | 15 | 7 |
| | 35 | 6 |
| | 37 | 3 |
| | 37 | 17 |
| | 51 | 6 |
| | 51 | 12 |
| | 51 | 14 |
| | 51 | 24 |
| | 51 | 28 |
| | 52 | 20 |
| | 53 | 3 |
| | 53 | 6 |
| | 53 | 8 |
| | 53 | 13 |
| | 53 | 16 |
| | 53 | 19 |
| | 53 | 21 |
| | 53 | 23 |
| | 53 | 25 |
| | 53 | 27 |
| | 54 | 3 |
| | 54 | 6 |
| | 54 | 8 |
| | 54 | 13 |
| | 54 | 16 |
| | 54 | 19 |
| | 54 | 21 |
| | 54 | 23 |
| | 54 | 25 |
| | 54 | 27 |
| | 55 | 2 |
| | 55 | 9 |
| | 55 | 12 |
| | 55 | 14 |
| | 55 | 16 |

# Alpabetical Index




| Description | Fig. | Key |
|---|---|---|
| BOLT, SP/M8X16 | 55 | 18 |
| | 55 | 20 |
| | 55 | 22 |
| | 56 | 2 |
| | 56 | 9 |
| | 56 | 12 |
| | 56 | 14 |
| | 56 | 16 |
| | 56 | 18 |
| | 56 | 20 |
| | 56 | 22 |
| | 57 | 3 |
| | 57 | 6 |
| | 74 | 11 |
| | 77 | 34 |
| | 86 | 34 |
| | 86 | 36 |
| | 86 | 46 |
| | 87 | 22 |
| BOLT, SP/M8X16/7T | 50 | 18 |
| BOLT, SP/M8X20 | 3 | 17 |
| | 4 | 17 |
| | 6 | 2 |
| | 7 | 6 |
| | 9 | 7 |
| | 70 | 13 |
| | 86 | 41 |
| | 86 | 43 |
| BOLT, SP/M8X20/7T | 36 | 8 |
| | 51 | 30 |
| | 52 | 22 |
| | 64 | 50 |
| BOLT, SP/M8X25 | 8 | 8 |
| | 11 | 1 |
| BOLT, SP/M8X25/7T | 5 | 7 |
| | 6 | 8 |
| | 75 | 31 |
| BOLT, SP/M8X35/7T | 48 | 4 |
| | 49 | 5 |
| | 59 | 22 |
| | 60 | 22 |
| BOLT, SUS/M8X25 | 6 | 13 |
| BOLT/BATTERY | 14 | 2 |
| | 15 | 2 |
| BOLT/BUTTON/CAP | 19 | 4-A |
| BOLT/BUTTON/CAP | 20 | 7-A |
| BOLT/LH/M12X1.25X25 | 93 | 16 |
| | 94 | 16 |
| BOLT/M06X08/APSET | 107 | 8 |
| BOLT/M06X32 | 14 | 7 |
| BOLT/M10X190 | 59 | 12 |
| | 60 | 12 |
| BOLT/M10X21 | 46 | 4 |
| | 47 | 4 |
| BOLT/M10X30/7T, P1.25 | 5 | 3 |
| BOLT/M10X35 | 17 | 7 |
| | 46 | 8 |
| | 47 | 11 |
| BOLT/M10X35/9T | 61 | 67 |
| BOLT/M12X35/7T | 104 | 2 |
| BOLT/M12X60 | 105 | 2 |
| BOLT/M12X60/7T | 103 | 3 |
| BOLT/M16X120 | 92 | 2 |
| BOLT/M16X35/9T | 90 | 2 |
| | 90 | 9 |
| | 91 | 2 |
| | 91 | 9 |
| BOLT/M6X50 | 93 | 12 |
| | 94 | 12 |
| BOLT/M8X105 | 38 | 9 |
| BOLT/M8X120/7T | 22 | 5 |
| BOLT/M8X25 | 26 | 5 |
| BOLT/M8X35 | 3 | 23 |
| | 4 | 22 |
| BOLT/M8X40/7T | 59 | 29 |
| | 60 | 29 |
| BOLT/M8X45/7T | 37 | 33 |
| BOLT/M8X65 | 10 | 2 |
| BOLT/M8X75 | 68 | 38 |
| BOLT/M8X80 | 68 | 39 |
| | 80 | 6 |
| BOLT/S | 1 | 11 |
| | 1 | 14 |
| BOLT/S/M12X30 | 61 | 22 |
| | 61 | 26 |
| BOLT/SEAL/M8X30X9T | 19 | 6 |
| | 20 | 9 |
| | 59 | 2 |
| | 60 | 2 |
| BOLT/SM/M10X23 | 36 | 2 |
| BOLT/SOCKET/M10X30 | 19 | 4 |
| | 20 | 7 |
| | 20 | 7-B |
| BOLT/SOCKET/M10X45 | 20 | 9-A |
| BOLT/SP/M10X30 | 61 | 54 |
| BOOT | 82 | 46 |
| | 83 | 46 |
| | 84 | 28 |
| | 85 | 28 |
| BOOT/COVER/COLUMN | 73 | 4 |
| BRACKET/BASE/LH COMP | 1 | 12 |
| | 1 | 12-A |
| BRACKET/BASE/RH COMP | 1 | 13 |
| | 1 | 13-A |
| BRACKET/CONNECTOR | 86 | 33 |
| BRACKET/COVER COMP | 46 | 5 |
| | 47 | 7 |
| | 47 | 7-A |
| BRACKET/DPF/237 COMP | 6 | 5 |
| BRACKET/ECU COMP | 89 | 13 |
| BRACKET/FRONT/L COMP | 1 | 1 |
| BRACKET/FRONT/R COMP | 1 | 2 |
| BRACKET/FUSE COMP | 86 | 26 |
| BRACKET/LEVER/4WD | 58 | 1 |
| BRACKET/LEVER/ACCELE | 16 | 3 |
| BRACKET/MOUNT/L COMP | 1 | 9 |
| | 1 | 9-A |
| | 2 | 1 |
| BRACKET/MOUNT/R COMP | 1 | 10 |
| | 1 | 10-A |
| | 2 | 2 |
| BRACKET/MUFFLER/224 | 5 | 5 |
| BRACKET/NEUTRAL COMP | 36 | 7 |
| BRACKET/TAIL COMP | 6 | 1 |
| BRACKET/THROTTL COMP | 17 | 1 |
| BRACKET/VALVE COMP | 64 | 1 |
| BRACKET/WEIGHT COMP | 103 | 6 |
| BRAKE/114 ASSY | 40 | 4 |
| BUCKLE ASSY | 75 | 15 |
| BULB/12V/5W | 77 | 26 |
| | 78 | 26 |
| | 79 | 26 |
| BULB/12V21/5W | 110 | 8 |
| BULB/12V21W | 77 | 7 |
| | 77 | 12 |

# Alpabetical Index




| Description | Fig. | Key |
|---|---|---|
| BULB/12V21W | 78 | 7 |
| | 78 | 12 |
| | 79 | 7 |
| | 79 | 12 |
| | 110 | 7 |
| BULB/12V3.4W | 81 | 20 |
| BULB/12V4W | 77 | 8 |
| | 77 | 13 |
| | 78 | 8 |
| | 78 | 13 |
| | 79 | 8 |
| | 79 | 13 |
| BULB/H4/60/55W | 77 | 6 |
| | 77 | 11 |
| | 78 | 6 |
| | 78 | 11 |
| | 79 | 6 |
| | 79 | 11 |
| BULB/LAMP/14V60MA | 80 | 18 |
| | 80 | 20 |
| BUMPER/REAR COMP | 77 | 18 |
| | 77 | 18-A |
| | 78 | 18 |
| | 78 | 18-A |
| | 79 | 18 |
| | 79 | 18-A |
| BUSH | 108 | 7 |
| BUSH, LEVER | 3 | 19 |
| | 4 | 19 |
| BUSH/10X12X15 | 64 | 22 |
| | 106 | 9 |
| BUSH/18X20X20 | 36 | 12 |
| | 36 | 26 |
| BUSH/20X23X20 | 71 | 2 |
| | 71 | 4 |
| BUSH/22X25X25 | 37 | 11 |
| | 37 | 27 |
| | 41 | 25 |
| | 42 | 14 |
| | 61 | 19 |
| BUSH/40X44X15 | 106 | 13 |
| BUSH/BELT | 75 | 23 |
| BUTTON | 42 | 4 |
| BUZZER | 82 | 41 |
| | 83 | 41 |
| BUZZER | 84 | 23 |
| | 85 | 23 |
| CABLE/4WD/LOCK ASSY | 58 | 12 |
| CABLE/ACCELERATOR | 16 | 8 |
| CABLE/ACCELERATOR/AU | 18 | 1 |
| CABLE/BATTERY ASSY | 14 | 10 |
| | 15 | 8 |
| CABLE/DIFF ASSY | 28 | 6 |
| CABLE/EARTH ASSY | 14 | 6 |
| | 14 | 6-A |
| | 15 | 6 |
| CABLE/ENGINE/EARTH | 1 | 8 |
| | 2 | 8 |
| CAM/CENTER | 108 | 10 |
| CAM/DRAIVE | 108 | 13 |
| CAM/DRIVEN | 108 | 8 |
| CAP | 3 | 2 |
| | 3 | 31 |
| | 4 | 2 |
| | 4 | 30 |
| | 9 | 3 |
| | 107 | 4 |
| CAP COMP | 8 | 3 |
| CAP, BLANK/72 | 31 | 5 |
| CAP, OIL | 61 | 57 |
| CAP, PTO SHAFT | 35 | 5 |
| CAP/CONNECTOR | 86 | 18 |
| CAP/NONLEAK ASSY | 12 | 8 |
| | 13 | 8 |
| CAP/PIPE | 77 | 4 |
| | 78 | 4 |
| | 79 | 4 |
| CAP/WHEEL | 44 | 2 |
| | 45 | 2 |
| CARTRIDGE/10 | 69 | 4 |
| | 69 | 4-A |
| | 70 | 4 |
| | 70 | 4-A |
| CASE, DIFF | 26 | 6 |
| CASE/4WD | 59 | 3 |
| | 60 | 3 |
| CASE/BLOWER COMP | 93 | 1 |
| | 94 | 1 |
| CASE/CHAIN/A | 38 | 1 |
| CASE/CHAIN/B | 38 | 3 |
| CASE/CONTROLLER COMP | 88 | 1 |
| | 88 | 1-A |
| | 88 | 1-B |
| | 89 | 1 |
| | 89 | 1-A |
| | 89 | 1-B |
| CASE/DIFFERENTIAL/FR | 61 | 8 |
| CASE/FINAL/LOWER/LH | 61 | 38 |
| CASE/FINAL/LOWER/RH | 61 | 41 |
| CASE/FINAL/UPPER/LH | 61 | 20 |
| CASE/FINAL/UPPER/RH | 61 | 24 |
| CASE/HMP1/008 | 106 | 1 |
| CASE/TRANSMISSION/LH | 21 | 1 |
| CASE/TRANSMISSION/RH | 21 | 2 |
| CHAIN/ROLLER60X060 | 39 | 13 |
| CHUTE/BLOWER COMP | 93 | 3 |
| CHUTE/BLOWER/23 COMP | 94 | 3 |
| CHUTE/GUIDE COMP | 93 | 7 |
| | 94 | 7 |
| CLAMP | 89 | 17 |
| CLAMP COMP | 8 | 4 |
| | 9 | 5 |
| CLAMP/28X55 | 50 | 17 |
| | 51 | 5 |
| | 51 | 13 |
| | 51 | 27 |
| | 86 | 40 |
| | 86 | 42 |
| | 87 | 25 |
| CLAMP/WIRE/30-38 | 3 | 11 |
| | 4 | 11 |
| CLAMP/WIRE/36-44 | 3 | 10 |
| | 4 | 10 |
| CLAMP/WIRE/47-55 | 7 | 9 |
| | 8 | 11 |
| | 9 | 10 |
| CLAMP/WIRE/52-63 | 7 | 8 |
| | 7 | 11 |
| | 9 | 9 |
| | 9 | 12 |
| CLAMP/WIRE/69-80 | 8 | 12 |
| | 8 | 17 |
| CLAMP/WORM/16-25 | 8 | 15 |
| | 66 | 16 |
| | 67 | 15 |

# Alpabetical Index




| Description | Fig. | Key |
|---|---|---|
| CLEANER/AIR ASSY | 7 | 1 |
| CLEANER/AIR/225 ASSY | 9 | 1 |
| CLEANER/AIR/65/237 | 8 | 1 |
| | 8 | 1-A |
| CLIP | 7 | 3 |
| CLIP/08-09 | 13 | 14 |
| CLIP/BAND | 86 | 22 |
| CLIP/BAND/4.5 | 86 | 23 |
| | 87 | 17 |
| CLIP/HOSE/11.1-12.0 | 10 | 12 |
| CLIP/HOSE/11.9-12.6 | 10 | 6 |
| | 10 | 8 |
| | 11 | 6 |
| | 11 | 9 |
| | 11 | 12 |
| CLIP/HOSE/12.6-13.4 | 11 | 3 |
| | 11 | 5 |
| | 11 | 5-A |
| | 11 | 8 |
| | 11 | 8-A |
| | 11 | 11 |
| | 11 | 11-A |
| CLIP/HOSE/13.8-14.8 | 21 | 9 |
| CLIP/HOSE/14.7-15.9 | 3 | 13 |
| | 4 | 13 |
| CLIP/HOSE/8.7-9.3 | 10 | 14 |
| CLUMP | 3 | 35 |
| | 4 | 34 |
| CLUTCH ASSY | 59 | 13 |
| | 60 | 13 |
| CLUTCH/DIFFLOCK | 27 | 1 |
| CLUTCH/PTO ASSY | 32 | 6 |
| | 33 | 5 |
| | 34 | 5 |
| COLLAR,THRUST | 26 | 11 |
| COLLAR/08X12X15 | 48 | 3 |
| | 49 | 4 |
| COLLAR/12X22X80 | 46 | 12 |
| | 47 | 15 |
| COLLAR/31X38X61 | 39 | 20 |
| COLLAR/48X52X17 | 61 | 5 |
| COLLAR/50X62X08 | 25 | 6 |
| COLLAR/53X61X06 | 25 | 3 |
| COLUMN/STEERING/LOWE | 46 | 1 |
| | 47 | 1 |
| COLUMN/STEERING/UPPE | 46 | 3 |
| | 47 | 3 |
| CONNECTOR/SUCTION | 66 | 4 |
| | 67 | 4 |
| CONTROLLER ASSY | 88 | 5 |
| | 88 | 5-A |
| | 89 | 8 |
| | 89 | 8-A |
| | 89 | 8-B |
| CONTROLLER/PTO ASSY | 88 | 7 |
| | 89 | 10 |
| CONTROLLER/STEERING | 48 | 1 |
| | 49 | 1 |
| | 49 | 1-A |
| COOLER/OIL ASSY | 69 | 12 |
| | 69 | 12-A |
| | 70 | 12 |
| | 70 | 12-A |
| COUPLING/PTO | 33 | 3 |
| | 34 | 3 |
| COUPRING/16X27X55 | 32 | 22 |
| COVER ASSY | 7 | 2 |
| COVER,BRAKE | 40 | 5 |
| COVER/4WD COMP | 59 | 30 |
| COVER/ARM/LH | 75 | 17 |
| COVER/ARM/RH | 75 | 18 |
| COVER/BATTERY | 14 | 3 |
| | 15 | 3 |
| COVER/BUSH/HMP1/008 | 106 | 30 |
| COVER/CASE | 89 | 3 |
| COVER/CHUTE/SIDE | 53 | 24 |
| | 53 | 24-A |
| | 55 | 19 |
| | 55 | 19-A |
| COVER/CHUTE/SIDE/W | 54 | 24 |
| | 54 | 24-A |
| | 54 | 24-B |
| | 56 | 19 |
| COVER/COLUMN/F | 73 | 1 |
| COVER/COLUMN/R | 73 | 2 |
| COVER/CONTROLLER | 88 | 10 |
| | 89 | 5 |
| | 89 | 5-A |
| COVER/DUST | 62 | 4 |
| COVER/ENGINE COMP | 72 | 1 |
| COVER/FLYWHEEL COMP | 53 | 26 |
| | 54 | 26 |
| COVER/FLYWHEEL/225 | 55 | 21 |
| | 56 | 21 |
| COVER/FRONT | 74 | 6 |
| COVER/FRONT/LH | 53 | 1 |
| | 53 | 1-A |
| | 54 | 1 |
| | 54 | 1-A |
| COVER/FUSE | 86 | 16 |
| | 87 | 12 |
| COVER/FUSE/237 | 86 | 28 |
| COVER/FUSE/237 COMP | 86 | 28-A |
| COVER/FUSEBOX | 86 | 29 |
| COVER/MONITOR | 80 | 5 |
| COVER/OILGAUGE COMP | 53 | 12 |
| | 54 | 12 |
| | 55 | 6 |
| | 56 | 6 |
| COVER/RADIATOR | 3 | 37 |
| | 4 | 36 |
| COVER/RADIATOR COMP | 3 | 26 |
| | 4 | 25 |
| COVER/RADIATOR/UNDER | 53 | 7 |
| | 54 | 7 |
| COVER/REAR/LH COMP | 55 | 1 |
| | 56 | 1 |
| COVER/REAR/RH COMP | 55 | 10 |
| | 56 | 10 |
| COVER/REAR/UPPER | 53 | 17 |
| | 54 | 17 |
| COVER/REARLIGHT | 77 | 32 |
| COVER/ROD/A SET | 50 | 4 |
| COVER/ROD/B SET | 50 | 7 |
| COVER/SIDE/LH COMP | 53 | 4 |
| | 53 | 4-A |
| | 54 | 4 |
| | 54 | 4-A |
| COVER/SIDE/RH COMP | 53 | 9 |
| | 53 | 9-A |
| | 54 | 9 |
| | 54 | 9-A |
| COVER/SIDEPTO | 35 | 3 |
| COVER/TAIL COMP | 6 | 3 |
| COVER/TANK | 12 | 12 |

# Alpabetical Index




| Description | Fig. | Key |
|---|---|---|
| COVER/TANK | 13 | 12 |
| COVER/TRUNNION/HMP1/ | 106 | 31 |
| COVER/WHEEL | 61 | 53 |
| CUSHION ASSY | 75 | 3 |
| CUSHION,B/ RUBBER | 93 | 5 |
| | 94 | 5 |
| CUSHION/RUBBER/10X25 | 3 | 22 |
| | 4 | 21 |
| CYLINDER ASSY | 50 | 1 |
| CYLINDER/013 ASSY | 65 | 1 |
| | 65 | 1-A |
| DAMPER/OIL ASSY | 36 | 33 |
| DIODE/1.5A-3P ASSY | 86 | 20 |
| | 87 | 15 |
| DIODE/3.0A | 86 | 19 |
| | 87 | 14 |
| DISC/BRAKE | 109 | 7 |
| DISK/BRAKE | 111 | 11 |
| DRUM/BRAKE | 40 | 1 |
| DUMPER/HOOD ASSY | 72 | 11 |
| DUST SEAL | 50 | 6 |
| | 50 | 9 |
| DUST SEAL SER42 | 65 | 4 |
| ELBOW/45DEG ASSY | 66 | 17 |
| ELBOW/90DEG ASSY | 68 | 42 |
| | 69 | 14 |
| | 70 | 15 |
| ELBOW/SUCTION ASSY | 66 | 13 |
| ELEMENT | 107 | 7 |
| ELEMENT ASSY | 7 | 4 |
| ELEMENT/1ST | 9 | 6 |
| FAN COMP | 93 | 14 |
| | 94 | 14 |
| FAN/RADIATOR/22 ASSY | 4 | 6 |
| FAN/RADIATOR/23 ASSY | 3 | 6 |
| | 3 | 6-A |
| FENDER/SF2 | 74 | 1 |
| FILTER | 8 | 6-A |
| FILTER COMP | 8 | 6 |
| FILTER/CHARGE ASSY | 69 | 3-A |
| | 69 | 3-B |
| | 70 | 3-A |
| | 70 | 3-B |
| FILTER/FUEL | 12 | 7 |
| | 13 | 7 |
| FILTER/FUEL ASSY | 10 | 1 |
| FILTER/OIL ASSY | 69 | 3 |
| | 69 | 5 |
| | 70 | 3 |
| | 70 | 5 |
| FILTER/PORT/09 | 68 | 34 |
| FILTER/SUCTION/400 | 66 | 1 |
| | 67 | 1 |
| FLANGEBOLT | 75 | 21 |
| | 75 | 25 |
| | 75 | 26 |
| | 75 | 27 |
| FLANGEBOLT/M10X20 | 41 | 9 |
| | 46 | 2 |
| | 47 | 2 |
| FLANGEBOLT/M10X70 | 77 | 2 |
| | 78 | 2 |
| | 79 | 2 |
| FLANGEBOLT/M12X20 | 93 | 2 |
| | 94 | 2 |
| FLANGEBOLT/M6X10 | 64 | 16 |
| | 64 | 28 |
| | 64 | 40 |
| FLANGEBOLT/M6X12 | 35 | 2 |
| | 35 | 4 |
| FLANGEBOLT/M6X16 | 77 | 17 |
| | 78 | 17 |
| | 79 | 17 |
| FLANGEBOLT/M8X16 | 3 | 15 |
| | 4 | 15 |
| | 8 | 20 |
| | 27 | 7 |
| | 42 | 6 |
| | 46 | 6 |
| | 47 | 6 |
| | 47 | 9 |
| | 59 | 26 |
| | 59 | 31 |
| | 60 | 26 |
| | 76 | 2 |
| FLANGEBOLT/M8X20 | 41 | 26 |
| FLANGEBOLT/M8X25 | 21 | 5 |
| | 30 | 3 |
| | 31 | 3 |
| | 32 | 20 |
| FLANGEBOLT/M8X40 | 22 | 3 |
| | 38 | 6 |
| FLANGENUT | 75 | 24 |
| FLOOR | 76 | 1 |
| FRAME/FLOOR COMP | 51 | 15 |
| | 52 | 10 |
| FRAME/LH/225 COMP | 91 | 1 |
| FRAME/LH/237 COMP | 90 | 1 |
| FRAME/LOWER COMP | 52 | 5 |
| | 52 | 5-A |
| | 52 | 5-B |
| FRAME/LOWER/237 COMP | 51 | 7 |
| | 51 | 7-A |
| | 51 | 7-B |
| | 51 | 7-C |
| FRAME/MAIN COMP | 52 | 1 |
| FRAME/MAIN/237 COMP | 51 | 1 |
| FRAME/OILCOOLER/225 | 52 | 19 |
| FRAME/OILCOOLER/237 | 51 | 25 |
| | 51 | 25-A |
| FRAME/RADIATOR COMP | 3 | 16 |
| FRAME/RADIATOR/225 | 4 | 16 |
| FRAME/REAR/225 COMP | 52 | 14 |
| FRAME/REAR/237 COMP | 51 | 19 |
| FRAME/RH/225 COMP | 91 | 8 |
| FRAME/RH/237 COMP | 90 | 8 |
| FRAME/UPPER COMP | 51 | 21 |
| | 51 | 21-A |
| | 92 | 1 |
| FRAME/UPPER/225 COMP | 52 | 17 |
| | 52 | 17-A |
| | 52 | 17-B |
| FUSE/BLADE/32V05A | 86 | 10 |
| | 87 | 7 |
| FUSE/BLADE/32V10A | 86 | 11 |
| | 87 | 8 |
| FUSE/BLADE/32V15A | 86 | 12 |
| | 87 | 9 |
| FUSE/BLADE/32V20A | 86 | 13 |
| | 87 | 10 |
| FUSE/BLADE/32V30A | 86 | 14 |
| FUSE/SLOW BLOW/40A | 86 | 8 |
| | 87 | 6 |
| FUSE/SLOW BLOW/50A | 86 | 9 |
| FUSE/SLOW BLOW/60A | 87 | 5 |

# Alpabetical Index

1832-097-110-20


| Description | Fig. | Key |
|---|---|---|
| FUSE/SLOWBLOW/40A | 86 | 7 |
| | 87 | 4 |
| FUSE/SLOWBLOW/80A | 86 | 6 |
| GASKET | 5 | 2 |
| | 8 | 2 |
| | 9 | 2 |
| | 110 | 1 |
| GASKET/HMP1/008 | 106 | 20 |
| GAUGE, OIL | 21 | 13 |
| GAUGE/FUEL ASSY | 12 | 4 |
| | 13 | 4 |
| GEAR/BEVEL/09 | 61 | 45 |
| GEAR/BEVEL/11 | 61 | 28 |
| GEAR/BEVEL/14 | 26 | 10 |
| GEAR/BEVEL/15 | 61 | 10 |
| GEAR/BEVEL/17 | 61 | 31 |
| GEAR/BEVEL/21 | 61 | 16 |
| GEAR/BEVEL/35 | 61 | 48 |
| GEAR/HELICAL/28 | 23 | 1 |
| | 23 | 1-A |
| | 23 | 6 |
| | 32 | 3 |
| GEAR/HELICAL/31 | 23 | 4 |
| | 32 | 1 |
| | 33 | 1 |
| | 33 | 1-A |
| | 34 | 1 |
| | 34 | 1-A |
| GEAR/HELICAL/37/SF22 | 34 | 6 |
| GEAR/HELICAL/39 | 33 | 12 |
| GEAR/HELICAL/42 | 33 | 6 |
| GEAR/HELICAL/44 COMP | 34 | 12 |
| GEAR/INPUT SET | 25 | 1 |
| GEAR/SPUR/24 COMP | 25 | 9 |
| | 25 | 9-A |
| GEAR/SPUR/26 COMP | 32 | 7 |
| | 32 | 7-A |
| GEAR/SPUR/33 | 32 | 11 |
| GEAR/SPUR/34 | 32 | 13 |
| GEAR/SPUR/42 | 26 | 1 |
| GREASENIPPLE | 20 | 6 |
| GRIP | 64 | 17 |
| | 64 | 30 |
| | 64 | 41 |
| | 72 | 2 |
| GRIP | 74 | 12 |
| GRIP/07X34/OR | 29 | 6 |
| GRIP/4WD | 58 | 8 |
| GRIP/ORANGE | 42 | 5 |
| GRIP/ORANGE/10.5 | 16 | 2-A |
| | 17 | 5-A |
| GRIP/THROTTLE | 16 | 2 |
| | 17 | 5 |
| GROMMET | 3 | 21 |
| GROMMET/13X17X05 | 74 | 5 |
| GROMMET/17X21X05 | 74 | 2 |
| GROMMET/17X21X3 | 90 | 4 |
| | 91 | 4 |
| GROMMET/9 | 77 | 29 |
| | 78 | 29 |
| | 79 | 29 |
| GUARD/HOSE | 10 | 15 |
| GUARD/HOSE/237 | 11 | 13 |
| GUARD/RUBBER | 57 | 7 |
| GUARD/UNDER/FRONT | 53 | 20 |
| | 54 | 20 |
| | 55 | 15 |
| | 56 | 15 |
| GUARD/UNDER/REAR | 53 | 22 |
| | 54 | 22 |
| | 55 | 17 |
| | 56 | 17 |
| GUIDE/CHAIN | 39 | 14 |
| GUIDE/HOSE | 51 | 11 |
| | 51 | 23 |
| GUIDE/LEVER COMP | 64 | 49 |
| GUIDE/SPRING | 106 | 17 |
| HANGER, SUPPORT | 53 | 14 |
| | 54 | 14 |
| | 55 | 7 |
| | 56 | 7 |
| HARNESS/FAN ASSY | 86 | 24 |
| HARNESS/JOINT ASSY | 87 | 27 |
| HARNESS/LAMP | 77 | 27 |
| | 78 | 27 |
| | 79 | 27 |
| HARNESS/LAMP ASSY | 81 | 19 |
| HARNESS/MAIN ASSY | 86 | 1 |
| | 86 | 1-A |
| | 86 | 1-B |
| HARNESS/MAIN ASSY | 87 | 1 |
| HEXBOLT | 75 | 28 |
| HINGE ASSY | 75 | 12 |
| HINGECOVER | 75 | 13 |
| HOLDER | 16 | 11 |
| | 81 | 4 |
| HOLDER/DPF/LOWE COMP | 6 | 7 |
| | 6 | 7-A |
| HOLDER/DPFMUFFLER | 6 | 10 |
| HOLDER/JE/9-9 | 66 | 20 |
| | 67 | 19 |
| HORN ASSY | 82 | 37 |
| | 82 | 39 |
| | 83 | 37 |
| | 83 | 39 |
| | 84 | 19 |
| | 84 | 21 |
| | 85 | 19 |
| | 85 | 21 |
| HOSE/07X12X1250 ASSY | 10 | 11 |
| HOSE/08X12X1250 ASSY | 10 | 11-A |
| HOSE/08X13X300 | 10 | 7 |
| HOSE/08X13X600 | 10 | 5 |
| HOSE/14X22X385 | 8 | 14 |
| HOSE/290 ASSY | 3 | 12 |
| | 4 | 12 |
| HOSE/650 ASSY | 69 | 9 |
| | 70 | 9 |
| HOSE/BREATHER | 21 | 8 |
| HOSE/CLEANER/INLET | 7 | 10 |
| HOSE/CLEANER/INLET/2 | 8 | 16 |
| | 9 | 11 |
| HOSE/CLEANER/OUTLET/ | 7 | 7 |
| | 8 | 9 |
| | 9 | 8 |
| HOSE/DRAIN/MOTER | 66 | 15 |
| | 67 | 14 |
| HOSE/EG/INLET/237 | 8 | 10 |
| HOSE/FUEL/1050 ASSY | 11 | 7 |
| | 11 | 7-A |
| HOSE/FUEL/2250 ASSY | 10 | 13 |
| HOSE/FUEL/550 ASSY | 11 | 4 |
| HOSE/FUEL/850 ASSY | 11 | 2 |
| HOSE/FUEL/940 ASSY | 11 | 10 |
| HOSE/HYDRO/1000 ASSY | 68 | 14 |

# Alpabetical Index




| Description | Fig. | Key |
|---|---|---|
| HOSE/HYDRO/1100 ASSY | 65 | 11 |
| | 66 | 19 |
| | 67 | 18 |
| HOSE/HYDRO/1620 ASSY | 68 | 15 |
| HOSE/HYDRO/1800 ASSY | 68 | 50 |
| HOSE/HYDRO/1900 ASSY | 68 | 6 |
| HOSE/HYDRO/3200 ASSY | 50 | 16 |
| HOSE/HYDRO/600 ASSY | 68 | 11 |
| | 69 | 2 |
| | 70 | 2 |
| HOSE/HYDRO/660 ASSY | 65 | 10 |
| HOSE/RADIATOR/IN/224 | 4 | 8 |
| HOSE/RADIATOR/IN/237 | 3 | 8 |
| | 3 | 8-A |
| HOSE/RADIATOR/OUT/22 | 4 | 9 |
| HOSE/RADIATOR/OUT/23 | 3 | 9 |
| | 3 | 9-A |
| HOSE/RUBBER | 3 | 33 |
| | 3 | 34 |
| | 3 | 36 |
| | 4 | 32 |
| | 4 | 33 |
| | 4 | 35 |
| HOUSING/AXLE ASSY | 61 | 18 |
| HST/SFH/23 ASSY | 24 | 1 |
| | 24 | 1-A |
| | 24 | 1-B |
| HUB/12X22X30 | 59 | 8 |
| | 60 | 8 |
| HUB/12X22X97 | 59 | 9 |
| | 60 | 9 |
| HUB/BRAKE/SHAFT COMP | 41 | 27 |
| HUB/PARKING ASSY | 42 | 13 |
| INSULATOR | 17 | 12 |
| | 52 | 15 |
| | 71 | 12 |
| | 81 | 5 |
| | 92 | 11 |
| | 92 | 12 |
| INSULATOR/1000 | 72 | 8 |
| INSULATOR/10X10X450 | 3 | 4 |
| | 4 | 4 |
| INSULATOR/115 | 53 | 2 |
| | 53 | 5 |
| | 54 | 2 |
| INSULATOR/115 | 54 | 5 |
| INSULATOR/15 | 48 | 5 |
| | 49 | 6 |
| INSULATOR/15X55X03 | 53 | 11 |
| | 54 | 11 |
| INSULATOR/20X100X03 | 72 | 10 |
| INSULATOR/240 | 57 | 2 |
| | 57 | 5 |
| INSULATOR/300 | 3 | 38 |
| | 4 | 37 |
| | 74 | 7 |
| | 77 | 33 |
| INSULATOR/550 | 55 | 5 |
| | 56 | 5 |
| INSULATOR/595 | 72 | 9 |
| INSULATOR/90 | 3 | 29 |
| | 4 | 28 |
| | 53 | 18 |
| | 54 | 18 |
| INSULATOR/CHUTE | 93 | 8 |
| | 94 | 8 |
| INSULATOR/ECU | 89 | 15 |
| INSULATOR/LAMP | 77 | 21 |
| | 78 | 21 |
| | 79 | 21 |
| INSULATOR/LEVER/SUB | 64 | 29 |
| INSULATOR/MOUNT/LH | 1 | 4 |
| | 1 | 15 |
| | 2 | 4 |
| JOINT BALL M08LH | 36 | 22 |
| JOINT BALL M08RH | 36 | 18 |
| JOINT/A ASSY | 20 | 2-B |
| KEY | 80 | 11 |
| | 80 | 13 |
| | 81 | 16 |
| | 81 | 24 |
| KNOB/SET/M06X15 | 74 | 8 |
| LABEL/4WD | 97 | 5 |
| LABEL/BATTERY | 98 | 2 |
| | 98 | 12 |
| LABEL/BATTERY/55B24R | 99 | 13 |
| LABEL/BATTERY/80D26R | 98 | 13 |
| LABEL/CAUTION | 98 | 1 |
| LABEL/CAUTION | 98 | 9 |
| | 99 | 1 |
| | 99 | 9 |
| LABEL/CAUTION/L | 98 | 10 |
| | 99 | 10 |
| LABEL/CE | 100 | 1 |
| | 101 | 1 |
| LABEL/CONTROL | 97 | 4 |
| LABEL/CONTROL/SHROTT | 97 | 3 |
| LABEL/CONTROL/START | 80 | 3 |
| LABEL/CONTROL/START/ | 81 | 18 |
| LABEL/CONTROL/THROTT | 97 | 3-A |
| LABEL/DIFF | 97 | 2 |
| LABEL/FUEL | 98 | 3 |
| | 99 | 3 |
| LABEL/FUSE | 86 | 2 |
| | 87 | 2 |
| LABEL/FUSE/ECU | 86 | 5 |
| LABEL/INFOMATION | 100 | 3 |
| | 100 | 3-A |
| LABEL/METER | 81 | 22 |
| LABEL/NOISE/LWA/105 | 99 | 14 |
| LABEL/PANEL | 80 | 23 |
| LABEL/PARKING | 97 | 1 |
| LABEL/ROPS | 98 | 11 |
| | 99 | 11 |
| LABEL/SLOWBLOW | 86 | 4 |
| | 87 | 3 |
| LABEL/SLOWBLOW/50/40 | 86 | 3 |
| LABEL/SWITCH | 80 | 27 |
| LABEL/UKCA | 100 | 2 |
| LABEL/W/FAN | 98 | 6 |
| | 98 | 6-A |
| | 99 | 6 |
| | 99 | 6-A |
| LABEL/W/RADIATOR | 98 | 7 |
| | 99 | 7 |
| LABEL/W/STARTER | 98 | 8 |
| | 99 | 8 |
| LABEL/WARNING/BELT | 98 | 5 |
| | 99 | 5 |
| LABEL/WARNING/FAN/BE | 98 | 5-A |
| | 98 | 5-B |
| | 99 | 5-A |
| | 99 | 5-B |

# Alpabetical Index




| Description | Fig. | Key |
|---|---|---|
| LABEL/WARNING/HOT | 98 | 4 |
| | 99 | 4 |
| LAMP/COMBINATION/REA | 77 | 20 |
| | 78 | 20 |
| | 79 | 20 |
| LAMP/HEAD/LH ASSY | 77 | 5 |
| | 78 | 5 |
| | 79 | 5 |
| LAMP/HEAD/RH ASSY | 77 | 10 |
| | 78 | 10 |
| | 79 | 10 |
| LAMP/MONITOR ASSY | 81 | 9 |
| | 81 | 9-A |
| LAMP/NUMBERPLAT SET | 77 | 25 |
| | 78 | 25 |
| | 79 | 25 |
| LEVER/ACCELERATOR | 16 | 1 |
| | 16 | 1-A |
| LEVER/COLLECTOR COMP | 64 | 23 |
| | 64 | 35 |
| LEVER/LIFT COMP | 64 | 11 |
| LEVER/PARKING ASSY | 42 | 1 |
| LEVER/THROTTLE COMP | 17 | 4 |
| LEVER/TILT | 46 | 13 |
| | 47 | 16 |
| LEVER/UNLOAD COMP | 29 | 1 |
| LINING/11X40X03 | 17 | 6 |
| LINING/13X50X03 | 16 | 4 |
| LINKPIN | 92 | 7 |
| MANUAL/INSTRUCTION | 102 | 1 |
| MAT/STEP | 76 | 4 |
| METAL/4WD | 59 | 19 |
| | 60 | 19 |
| METAL/HST | 22 | 1 |
| | 22 | 1-A |
| METAL/PTO/B | 32 | 24 |
| | 32 | 24-A |
| METAL/PTO/BLOWER | 30 | 1 |
| | 31 | 1 |
| METAL/PTO/MOWER | 32 | 18 |
| | 32 | 18-A |
| METER/FUEL ASSY | 81 | 3 |
| METER/HOUR ASSY | 81 | 2 |
| MIRROR ASSY | 77 | 15 |
| | 77 | 15-A |
| MIRROR ASSY | 78 | 15 |
| | 78 | 15-A |
| | 79 | 15 |
| | 79 | 15-A |
| MOLDING/FENDER/LH | 95 | 1 |
| | 96 | 1 |
| MOLDING/FENDER/RH | 95 | 2 |
| | 96 | 2 |
| MUDGUARD/LH COMP | 57 | 1 |
| MUDGUARD/RH COMP | 57 | 4 |
| MUFFLER COMP | 5 | 1 |
| | 5 | 1-A |
| NEEDLE | 106 | 12 |
| NET/COOLER/OIL | 70 | 27 |
| NET/COOLER/OIL/237 | 69 | 26 |
| NIPPLE,GREASE | 28 | 3 |
| | 37 | 6 |
| | 37 | 20 |
| | 41 | 3 |
| | 41 | 15 |
| | 41 | 29 |
| | 61 | 61 |
| NUT | 81 | 7 |
| | 82 | 43 |
| | 82 | 45 |
| | 83 | 43 |
| | 83 | 45 |
| | 84 | 25 |
| | 84 | 27 |
| | 85 | 25 |
| | 85 | 27 |
| NUT,CASTLE/M10 P1.25 | 62 | 7 |
| NUT,CASTLE/M16 P=1.5 | 61 | 64 |
| NUT,RING | 107 | 5 |
| NUT/CLIP | 8 | 7 |
| NUT/LH/M08 | 36 | 21 |
| | 41 | 36 |
| NUT/M06 | 14 | 8 |
| NUT/M10 | 16 | 7 |
| | 17 | 11 |
| | 46 | 9 |
| | 47 | 12 |
| NUT/M10/7T | 43 | 6 |
| | 61 | 66 |
| NUT/M12 | 1 | 5 |
| NUT/M12 | 1 | 16 |
| | 2 | 5 |
| | 36 | 6 |
| | 105 | 3 |
| NUT/M12/7T | 36 | 32 |
| | 51 | 17 |
| | 52 | 12 |
| | 62 | 6 |
| NUT/M16 | 49 | 2 |
| | 71 | 11 |
| | 92 | 3 |
| NUT/M6 | 14 | 4 |
| | 15 | 4 |
| | 17 | 20 |
| | 68 | 4 |
| | 93 | 13 |
| | 94 | 13 |
| NUT/M8 | 36 | 17 |
| | 36 | 19 |
| | 36 | 24 |
| | 41 | 34 |
| | 59 | 28 |
| | 60 | 28 |
| | 66 | 12 |
| | 67 | 12 |
| | 71 | 13 |
| | 92 | 13 |
| | 93 | 6 |
| | 94 | 6 |
| | 110 | 6 |
| NUT/M8/7T | 37 | 35 |
| NUT/RING | 80 | 12 |
| | 81 | 17 |
| NUT/SM/M10X1.25 | 20 | 11 |
| NUT/WASHER/M10 | 36 | 10 |
| | 58 | 2 |
| NUT/WASHER/M4 | 12 | 6 |
| | 13 | 6 |
| NUT/WASHER/M5 | 17 | 15 |
| | 82 | 2 |
| | 82 | 4 |
| | 82 | 6 |
| | 82 | 8 |
| | 82 | 10 |
| | 82 | 12 |

# Alpabetical Index




| Description | Fig. | Key |
|---|---|---|
| NUT/WASHER/M5 | 82 | 14 |
| | 82 | 28 |
| | 82 | 30 |
| | 82 | 32 |
| | 83 | 2 |
| | 83 | 4 |
| | 83 | 6 |
| | 83 | 8 |
| | 83 | 10 |
| | 83 | 12 |
| | 83 | 14 |
| | 83 | 28 |
| | 83 | 30 |
| | 83 | 32 |
| | 84 | 2 |
| | 84 | 14 |
| | 85 | 2 |
| | 85 | 14 |
| | 89 | 16 |
| NUT/WASHER/M6 | 10 | 10 |
| | 14 | 5 |
| | 15 | 5 |
| | 82 | 34 |
| | 82 | 36 |
| | 82 | 38 |
| | 82 | 40 |
| | 82 | 53 |
| | 83 | 34 |
| | 83 | 36 |
| | 83 | 38 |
| | 83 | 40 |
| | 83 | 53 |
| | 84 | 16 |
| | 84 | 18 |
| | 84 | 22 |
| | 84 | 35 |
| | 85 | 16 |
| | 85 | 18 |
| | 85 | 22 |
| | 85 | 35 |
| | 86 | 25 |
| | 86 | 27 |
| | 86 | 31 |
| | 87 | 18 |
| | 87 | 20 |

| Description | Fig. | Key |
|---|---|---|
| NUT/WASHER/M6 | 88 | 9 |
| | 89 | 4 |
| | 89 | 9 |
| | 89 | 12 |
| NUT/WASHER/M8 | 3 | 18 |
| | 3 | 39 |
| | 4 | 18 |
| | 4 | 38 |
| | 13 | 15 |
| | 14 | 11 |
| | 15 | 9 |
| | 36 | 34 |
| | 51 | 26 |
| | 53 | 15 |
| | 54 | 15 |
| | 55 | 8 |
| | 56 | 8 |
| | 69 | 13 |
| | 70 | 14 |
| | 72 | 7 |
| | 72 | 12 |
| | 82 | 58 |
| | 83 | 58 |
| | 84 | 40 |
| | 85 | 40 |
| | 86 | 30 |
| | 87 | 26 |
| | 88 | 3 |
| | 88 | 6 |
| | 88 | 11 |
| | 89 | 2 |
| | 89 | 6 |
| | 93 | 4 |
| | 94 | 4 |
| OIL SEAL | 106 | 29 |
| O-RING | 106 | 42 |
| O-RING/1A, G35 | 66 | 6 |
| | 67 | 6 |
| O-RING/1A, G45 | 66 | 2 |
| | 66 | 5 |
| | 67 | 2 |
| | 67 | 5 |
| O-RING/1A, G50 | 24 | 3 |
| O-RING/1A, G60 | 106 | 32 |
| O-RING/1A, G65 | 59 | 7 |

| Description | Fig. | Key |
|---|---|---|
| O-RING/1A, G65 | 60 | 7 |
| O-RING/1A, G70 | 24 | 4 |
| O-RING/1A, P10A | 107 | 2 |
| O-RING/1A, P18 | 40 | 8 |
| O-RING/1A, P20 | 92 | 10 |
| O-RING/1A, P24 | 27 | 4 |
| | 59 | 24 |
| | 60 | 24 |
| O-RING/1A, P44 | 107 | 6 |
| O-RING/1A, S29 | 21 | 11 |
| O-RING/1A, S34 | 32 | 17 |
| O-RING/1A, S42 | 50 | 11 |
| O-RING/1A, S50 | 81 | 21 |
| O-RING/1B, P10 | 106 | 43 |
| O-RING/1B, P11 | 66 | 18 |
| | 67 | 17 |
| | 68 | 8 |
| | 68 | 10 |
| | 68 | 13 |
| | 68 | 45 |
| | 68 | 49 |
| | 68 | 53 |
| | 68 | 56 |
| | 106 | 24 |
| O-RING/1B, P12 | 68 | 35 |
| | 106 | 36 |
| O-RING/1B, P14 | 68 | 31 |
| | 68 | 32 |
| | 68 | 43 |
| | 69 | 11 |
| | 69 | 15 |
| | 69 | 17 |
| | 69 | 19 |
| | 69 | 21 |
| | 69 | 24 |
| | 70 | 11 |
| | 70 | 16 |
| | 70 | 18 |
| | 70 | 20 |
| | 70 | 22 |
| | 70 | 25 |
| | 106 | 23 |
| O-RING/1B, P15 | 24 | 5 |
| O-RING/1B, P16 | 68 | 20 |
| O-RING/1B, P18 | 66 | 14 |

# Alpabetical Index




| Description | Fig. | Key |
|---|---|---|
| O-RING/1B,P18 | 106 | 38 |
| O-RING/1B,P20 | 68 | 22 |
| O-RING/1B,P22 | 68 | 19 |
| O-RING/1B,P7 | 68 | 36 |
| O-RING/1B,S38 | 50 | 10 |
| O-RING/AS568/013 | 68 | 23 |
| O-RING/AS568/014 | 68 | 24 |
| O-RING/AS568/015 | 68 | 25 |
| ORNAMENT/225 | 96 | 3 |
| ORNAMENT/237 | 95 | 3 |
| ORNAMENT/DIESEL | 95 | 4 |
| | 96 | 4 |
| ORNAMENT/ISEKI | 95 | 5 |
| | 95 | 6 |
| | 96 | 5 |
| | 96 | 6 |
| ORNAMENT/STEERING | 95 | 7 |
| | 96 | 7 |
| PACKING | 3 | 32 |
| | 4 | 31 |
| | 12 | 10 |
| | 13 | 10 |
| | 61 | 58 |
| | 107 | 9 |
| PACKING PS-42 | 65 | 5 |
| PACKING,OIL PUMP | 66 | 10 |
| | 67 | 10 |
| PACKING/PISTON | 50 | 3 |
| PACKING/RUBBER | 12 | 5 |
| | 13 | 5 |
| PACKINGA | 12 | 11 |
| | 13 | 11 |
| PAD | 41 | 8 |
| PAD/25 | 70 | 28 |
| PAD/50 | 10 | 16 |
| | 11 | 14 |
| | 17 | 2 |
| | 47 | 8 |
| | 58 | 3 |
| | 88 | 2 |
| PAD/HST | 37 | 2 |
| PAD/HST/R | 37 | 16 |
| PAD/PS | 48 | 2 |
| | 49 | 3 |
| PANEL/MONITOR ASSY | 80 | 4 |
| PANEL/SWITCH | 80 | 1 |
| PANEL/SWITCH COMP | 81 | 1 |
| PEDAL/BRAKE COMP | 41 | 7 |
| PEDAL/DIFF COMP | 28 | 1 |
| PEDAL/HST/F COMP | 37 | 1 |
| PEDAL/HST/RH COMP | 37 | 15 |
| PIN ASSY | 92 | 5 |
| PIN,SPLIT/2.5X15 | 16 | 10 |
| PIN,SPLIT/2.5X20 | 18 | 3 |
| | 28 | 8 |
| | 29 | 3 |
| | 36 | 36 |
| | 37 | 9 |
| | 37 | 14 |
| | 37 | 25 |
| | 37 | 30 |
| | 41 | 12 |
| | 41 | 20 |
| | 41 | 40 |
| | 42 | 9 |
| | 42 | 18 |
| | 58 | 6 |
| | 58 | 11 |
| | 58 | 15 |
| | 62 | 9 |
| PIN,SPLIT/2.5X25 | 64 | 6 |
| | 64 | 47 |
| PIN,SPLIT/2X20 | 64 | 14 |
| | 64 | 26 |
| | 64 | 38 |
| PIN,SPLIT/4X30 | 61 | 65 |
| PIN,SPLIT/4X40 | 41 | 23 |
| PIN,SPRING/3X18 W | 58 | 9 |
| PIN,ST | 106 | 33 |
| PIN,ST,B/10X22 | 21 | 4 |
| | 22 | 2 |
| | 30 | 2 |
| | 31 | 2 |
| | 32 | 19 |
| | 38 | 5 |
| | 38 | 10 |
| | 59 | 21 |
| | 60 | 21 |
| PIN,ST,B/8X16 | 24 | 2 |
| | 26 | 3 |
| PIN/05X17 | 64 | 7 |
| PIN/10X101 | 64 | 4 |
| PIN/10X141 | 64 | 45 |
| PIN/10X21 | 27 | 3 |
| PIN/12X75 | 61 | 11 |
| PIN/14X63 COMP | 65 | 8 |
| | 71 | 5 |
| PIN/19X124 | 92 | 6 |
| PIN/6X42 | 64 | 12 |
| | 64 | 24 |
| | 64 | 36 |
| PIN/B | 61 | 23 |
| | 61 | 27 |
| PIN/BRAKE COMP | 40 | 6 |
| PIN/COUNTER/HST | 36 | 29 |
| PIN/COUNTER/HST COMP | 37 | 31 |
| PIN/GROOVE | 41 | 32 |
| | 42 | 12 |
| PIN/M16X112 COMP | 71 | 7 |
| PIN/PARALLEL/08X32 | 26 | 2 |
| PIN/PIVOT COMP | 61 | 60 |
| PIN/SNAP | 64 | 9 |
| | 64 | 20 |
| | 64 | 33 |
| | 64 | 44 |
| PIN/SNAP/B | 58 | 14 |
| PIN/SPRING | 61 | 12 |
| PIN/STRAIGHT | 108 | 11 |
| PINION/BEVEL/09 | 61 | 1 |
| PINION/BEVEL/11 | 61 | 9 |
| PINION/BEVEL/12 | 26 | 8 |
| PIPE,BREATHER | 21 | 7 |
| PIPE/BLOWER COMP | 68 | 54 |
| PIPE/CLEANER COMP | 8 | 13 |
| PIPE/COOLER COMP | 69 | 22 |
| | 70 | 23 |
| PIPE/FILLER/OIL COMP | 21 | 10 |
| PIPE/FILTER COMP | 69 | 25 |
| | 70 | 26 |
| PIPE/FUEL | 13 | 13 |
| PIPE/PTO/MOWER COMP | 68 | 51 |
| PISTON | 109 | 1 |
| | 111 | 1 |
| PISTON STOPPER | 65 | 3 |
| PISTON/012 | 65 | 2 |

# Alpabetical Index




| Description | Fig. | Key |
|---|---|---|
| PLATE | 12 | 9 |
| | 13 | 9 |
| | 37 | 21 |
| | 41 | 4 |
| | 59 | 25 |
| | 60 | 25 |
| PLATE, SWITCH | 82 | 61 |
| | 83 | 61 |
| | 84 | 43 |
| | 85 | 43 |
| PLATE/ADJUST COMP | 36 | 9 |
| PLATE/BACK | 109 | 4 |
| | 111 | 7 |
| PLATE/BRAKE | 109 | 8 |
| PLATE/BRAKE COMP | 41 | 10 |
| PLATE/BUMPER | 104 | 1 |
| PLATE/CONTROLLER | 48 | 6 |
| | 49 | 7 |
| PLATE/DISC | 109 | 2 |
| PLATE/DISK | 111 | 6 |
| PLATE/I/16X1105 | 37 | 12 |
| | 37 | 28 |
| PLATE/I/16X217 | 37 | 7 |
| | 37 | 23 |
| PLATE/I/19X115 | 57 | 8 |
| PLATE/I/19X140 | 64 | 31 |
| | 64 | 42 |
| PLATE/I/19X254 | 64 | 18 |
| PLATE/I/19X517 | 42 | 16 |
| PLATE/I/19X927 | 41 | 18 |
| PLATE/I/22X130 | 12 | 3 |
| | 13 | 3 |
| PLATE/I/22X50 | 5 | 11 |
| PLATE/PARKING COMP | 42 | 7 |
| PLATE/REAR/RH/UPPER | 55 | 13 |
| | 56 | 13 |
| PLATE/SEPARATER | 109 | 3 |
| | 111 | 5 |
| PLATE/SIDE/LH/F | 55 | 3 |
| | 56 | 3 |
| PLATE/STAY/ROD COMP | 51 | 8 |
| | 52 | 7 |
| PLATE/SWASH/HMP1/006 | 106 | 4 |
| PLATE/SWITCH COMP | 82 | 57 |
| | 83 | 57 |
| PLATE/SWITCH COMP | 84 | 39 |
| | 85 | 39 |
| PLATE/THRUST/HMP1/00 | 106 | 11 |
| PLATE/U/70X85 | 77 | 22 |
| | 78 | 22 |
| | 79 | 22 |
| PLATE/UNLOAD | 29 | 5 |
| PLATE/VALVE/MOTOR | 106 | 6 |
| PLATE/VALVE/PUMP | 106 | 5 |
| PLUG | 81 | 8 |
| PLUG(G3/8) | 106 | 21 |
| PLUG(PF1/4) | 68 | 2 |
| | 106 | 22 |
| PLUG, CAP/62X6 | 106 | 28 |
| PLUG/52X10 | 61 | 40 |
| | 61 | 44 |
| PLUG/M12X1.25 | 106 | 40 |
| PLUG/SCREW/R1/4 | 61 | 42 |
| PLUG/SCREW/SEAL | 21 | 6 |
| | 38 | 2 |
| | 38 | 4 |
| | 59 | 4 |
| | 59 | 20 |
| | 60 | 4 |
| | 60 | 20 |
| | 61 | 59 |
| | 68 | 26 |
| | 68 | 37 |
| | 106 | 44 |
| POPPET/1.3 | 68 | 29 |
| POPPET/CHECK/0.5 | 106 | 18 |
| POPPET/CHECK/0.9X2 | 106 | 19 |
| POPPET/RELIEF | 106 | 16 |
| PRECLEANER ASSY | 8 | 18 |
| PRESSURE/BRAKE | 111 | 12 |
| PUMP/FUEL ASSY | 10 | 9 |
| PUMP/GEAR/R4 ASSY | 66 | 9 |
| PUNP/GEAR/5.2/L ASSY | 67 | 9 |
| RACKEND ASSY | 62 | 3 |
| RADIATOR ASSY | 3 | 1 |
| | 4 | 1 |
| RBB/FLANGE | 41 | 24 |
| RECLINER ASSY | 75 | 8 |
| RECLINERCOVER | 75 | 9 |
| RECLINERLEVER | 75 | 10 |
| RELAY ASSY | 82 | 7 |
| | 82 | 9 |
| | 82 | 11 |
| | 82 | 13 |
| | 83 | 7 |
| | 83 | 9 |
| | 83 | 11 |
| | 83 | 13 |
| | 84 | 1 |
| | 84 | 4 |
| | 84 | 13 |
| | 85 | 1 |
| | 85 | 4 |
| | 85 | 13 |
| RELAY/35A ASSY | 82 | 1 |
| | 82 | 3 |
| | 82 | 5 |
| | 83 | 1 |
| | 83 | 3 |
| | 83 | 5 |
| RELAY/5P ASSY | 82 | 15 |
| | 82 | 16 |
| | 82 | 17 |
| | 82 | 18 |
| | 82 | 19 |
| | 82 | 20 |
| | 82 | 21 |
| | 82 | 22 |
| | 82 | 23 |
| | 82 | 24 |
| | 82 | 25 |
| | 82 | 27 |
| | 82 | 29 |
| | 82 | 31 |
| | 83 | 15 |
| | 83 | 16 |
| | 83 | 17 |
| | 83 | 18 |
| | 83 | 19 |
| | 83 | 20 |
| | 83 | 21 |
| | 83 | 22 |
| | 83 | 23 |
| | 83 | 24 |
| | 83 | 25 |

# Alpabetical Index




| Description | Fig. | Key |
|---|---|---|
| RELAY/5P ASSY | 83 | 27 |
| | 83 | 29 |
| | 83 | 31 |
| | 84 | 5 |
| | 84 | 6 |
| | 84 | 7 |
| | 84 | 8 |
| | 84 | 9 |
| | 84 | 10 |
| | 84 | 11 |
| | 84 | 12 |
| | 85 | 5 |
| | 85 | 6 |
| | 85 | 7 |
| | 85 | 8 |
| | 85 | 9 |
| | 85 | 10 |
| | 85 | 11 |
| | 85 | 12 |
| RELAY/CM/1C ASSY | 82 | 15-A |
| | 82 | 16-A |
| | 82 | 17-A |
| | 82 | 18-A |
| | 82 | 19-A |
| | 82 | 20-A |
| | 82 | 21-A |
| | 82 | 22-A |
| | 82 | 23-A |
| | 82 | 24-A |
| | 83 | 15-A |
| | 83 | 16-A |
| | 83 | 17-A |
| | 83 | 18-A |
| | 83 | 19-A |
| | 83 | 20-A |
| | 83 | 21-A |
| | 83 | 22-A |
| | 83 | 23-A |
| | 83 | 24-A |
| | 84 | 5-A |
| | 84 | 6-A |
| | 84 | 7-A |
| | 84 | 8-A |
| | 84 | 9-A |
| | 84 | 10-A |

| Description | Fig. | Key |
|---|---|---|
| RELAY/CM/1C ASSY | 84 | 11-A |
| | 84 | 12-A |
| | 85 | 5-A |
| | 85 | 6-A |
| | 85 | 7-A |
| | 85 | 8-A |
| | 85 | 9-A |
| | 85 | 10-A |
| | 85 | 11-A |
| | 85 | 12-A |
| RELAY/FLASHER/EEC | 82 | 35 |
| | 83 | 35 |
| | 84 | 17 |
| | 85 | 17 |
| RELIEFVALVE/090 ASSY | 68 | 27 |
| RESERVETANK ASSY | 3 | 30 |
| | 4 | 29 |
| RESISTER/8 | 87 | 13 |
| RING | 92 | 9 |
| RING, SNAP/16 C | 40 | 3 |
| RING, SNAP/17 C | 32 | 10 |
| RING, SNAP/18 C | 36 | 14 |
| | 36 | 28 |
| RING, SNAP/20 C | 33 | 11 |
| | 34 | 11 |
| RING, SNAP/22 C | 28 | 5 |
| | 37 | 22 |
| | 40 | 9 |
| | 41 | 5 |
| | 41 | 17 |
| RING, SNAP/25 C | 39 | 10 |
| | 106 | 25 |
| RING, SNAP/30 C | 25 | 5 |
| | 39 | 22 |
| | 111 | 10 |
| RING, SNAP/32 C | 106 | 27 |
| RING, SNAP/34 C | 32 | 15 |
| RING, SNAP/45 C | 59 | 5 |
| | 60 | 5 |
| RING, SNAP/47 C | 59 | 18 |
| | 60 | 18 |
| RING, SNAP/52 C | 32 | 29 |
| | 39 | 3 |
| | 39 | 7 |
| RING, SNAP/R62 | 25 | 14 |

| Description | Fig. | Key |
|---|---|---|
| RING, SNAP/R72 | 31 | 4 |
| | 33 | 15 |
| | 34 | 15 |
| RING/22 | 33 | 8 |
| | 34 | 8 |
| RING/25 | 33 | 7 |
| | 34 | 7 |
| RING/36 | 62 | 5 |
| RING/BACK UP | 65 | 6 |
| | 106 | 37 |
| RING/BRAKE | 108 | 4 |
| RING/O | 109 | 12 |
| | 111 | 2 |
| | 111 | 3 |
| RING/O/1A/G90 | 61 | 21 |
| | 61 | 25 |
| RING/SEAL | 109 | 6 |
| RING/SNAP | 109 | 5 |
| | 109 | 9 |
| RING/SNAP/A | 108 | 2 |
| RING/SNAP/B | 108 | 12 |
| RING/SNAP/CR52 | 61 | 6 |
| | 61 | 39 |
| | 61 | 43 |
| RING/SNAP/CR62 | 61 | 30 |
| | 61 | 37 |
| RING/SNAP/CS25 | 61 | 4 |
| RING/SNAP/CS40 | 61 | 17 |
| | 61 | 36 |
| RING/SNAP/CS50 | 61 | 15 |
| RING/SNAP/R62 | 39 | 16 |
| | 106 | 26 |
| RIVET/SCREW ASSY | 76 | 5 |
| ROD | 42 | 2 |
| ROD PACKING | 50 | 5 |
| | 50 | 8 |
| ROD/127 COMP | 46 | 11 |
| | 47 | 14 |
| ROD/4WD | 58 | 7 |
| ROD/M08X110 COMP | 36 | 20 |
| ROD/M08X120 | 41 | 33 |
| ROD/M08X47 | 36 | 16 |
| ROD/M08X72/LH | 41 | 37 |
| ROD/PISTON | 50 | 2 |
| RODEND/137 ASSY | 62 | 1 |

# Alpabetical Index




| Description | Fig. | Key |
|---|---|---|
| RODEND/B ASSY | 62 | 2 |
| ROUNDBOLT | 75 | 11 |
| RUBBER, CUSHION | 74 | 10 |
| S.W/LH/M12 | 93 | 17 |
| | 94 | 17 |
| SCREW, SEMS/M5X16 | 90 | 7 |
| | 91 | 7 |
| SCREW, SOCKET/M10X35 | 106 | 34 |
| SCREW, SP/M3X16 | 86 | 38 |
| SCREW, SP/M4X12 | 17 | 17 |
| SCREW, SP/M5X20 | 17 | 14 |
| SCREW, SP/M6X12 | 3 | 27 |
| | 4 | 26 |
| SCREW, SP/M6X20 | 72 | 3 |
| SCREW, SP/M6X25 | 74 | 13 |
| SCREW/M03X20 | 82 | 60 |
| | 83 | 60 |
| | 84 | 42 |
| | 85 | 42 |
| SCREW/M5X12 | 82 | 26 |
| | 83 | 26 |
| | 84 | 3 |
| | 85 | 3 |
| SCREW/M6X25 | 77 | 31 |
| | 79 | 31 |
| SCREW/SOCKET/M8X16 | 106 | 45 |
| SCREW/TAPPING | 81 | 10 |
| SCREW/TAPPING/3.5X13 | 80 | 15 |
| | 81 | 26 |
| SCREW/TRUSS/M06X16 | 80 | 2 |
| | 81 | 23 |
| SCREW/TRUSS/M08X20 | 73 | 3 |
| | 76 | 3 |
| SEAL(62) | 25 | 15 |
| SEAL, OIL | 33 | 16 |
| | 34 | 16 |
| SEAL, OIL/TC20357 | 59 | 17 |
| | 60 | 17 |
| SEAL, OIL/TC20408 | 39 | 17 |
| SEAL, OIL/TC20428 | 23 | 3 |
| SEAL, OIL/TC25458 | 59 | 6 |
| | 60 | 6 |
| SEAL, OIL/TC30458 | 39 | 4 |
| | 39 | 8 |
| SEAL/JOINT | 19 | 7 |
| SEAL/JOINT | 20 | 12 |
| SEAL/OIL | 32 | 16 |
| | 39 | 18 |
| | 61 | 7 |
| SEAL/OIL ASSY | 61 | 33 |
| | 61 | 50 |
| SEAL/RING/45X03 | 111 | 14 |
| SEAT ASSY | 75 | 1 |
| SENSOR/ANGLE/110/L | 17 | 16 |
| SENSOR/STRAW/L/165 | 82 | 47 |
| | 82 | 65 |
| | 83 | 47 |
| | 84 | 29 |
| | 84 | 47 |
| | 85 | 29 |
| SHAFT, DIFF. PINION | 26 | 7 |
| SHAFT/100 | 61 | 56 |
| SHAFT/450 | 61 | 55 |
| SHAFT/465 | 32 | 21 |
| SHAFT/4WD ASSY | 59 | 1 |
| | 60 | 1 |
| SHAFT/BRAKE COMP | 41 | 21 |
| | 41 | 21-A |
| SHAFT/DIFF/LH | 39 | 1 |
| SHAFT/DIFF/RH | 39 | 5 |
| SHAFT/INPUT SET | 19 | 1 |
| SHAFT/INPUT/237 SET | 20 | 1 |
| | 20 | 1-A |
| | 20 | 1-B |
| SHAFT/MOTOR/008 SET | 106 | 8 |
| SHAFT/OUTPUT | 59 | 15 |
| | 60 | 15 |
| SHAFT/PTO | 32 | 26 |
| SHAFT/PUMP/HMP1/008 | 106 | 7 |
| SHAFT/WHEEL | 61 | 47 |
| SHAFT/WHEEL COMP | 39 | 19 |
| SHIM | 25 | 7 |
| SHIM/0.1 | 25 | 11 |
| SHIM/0.2 | 25 | 8 |
| | 25 | 12 |
| SHIM/0.3 | 5 | 9 |
| SHIM/0.6/A | 5 | 10 |
| SHIM/0.6/B | 5 | 8 |
| SHIM/1.0 | 21 | 3 |
| SHOE/BRAKE | 108 | 5 |
| SHOE/BRAKE SET | 40 | 10 |
| SHOLDERREST ASSY | 75 | 4 |
| SHROUD COMP | 3 | 3 |
| | 3 | 3-A |
| | 4 | 3 |
| | 4 | 3-A |
| SLEEVE ASSY | 59 | 14 |
| | 60 | 14 |
| SLEEVEYOKE | 20 | 5 |
| SLIDE ASSY | 75 | 7 |
| SLIDE/LEVER ASSY | 75 | 6 |
| SLIPYOKE | 19 | 2 |
| | 20 | 2 |
| | 20 | 2-A |
| | 20 | 3 |
| SNAPRING | 111 | 8 |
| SNAPRING/85 | 111 | 13 |
| SPOOL | 106 | 39 |
| SPRING | 3 | 28 |
| | 4 | 27 |
| | 42 | 3 |
| | 108 | 6 |
| | 109 | 10 |
| | 111 | 4 |
| SPRING, DISK | 16 | 5 |
| | 17 | 9 |
| SPRING, TENSION | 40 | 7 |
| | 59 | 27 |
| | 60 | 27 |
| SPRING, VALVE | 107 | 1 |
| SPRING/A | 108 | 9 |
| SPRING/HC021 | 106 | 15 |
| SPRING/HC023 | 106 | 41 |
| SPRING/HC030 | 106 | 14 |
| SPRING/HC043 | 64 | 48 |
| SPRING/HC045 | 68 | 28 |
| SPRING/HC058 | 93 | 11 |
| | 94 | 11 |
| SPRING/HE053 | 29 | 4 |
| SPRING/HE060 | 41 | 38 |
| SPRING/HE073 | 27 | 5 |
| SPRING/HE095 | 41 | 6 |
| SPRING/HE108 | 36 | 15 |
| SPRING/PLATE | 64 | 15 |
| | 64 | 27 |

# Alpabetical Index




| Description | Fig. | Key |
|---|---|---|
| SPRING/PLATE | 64 | 39 |
| SPRINGWASHER | 75 | 30 |
| SPROCKET/11 | 39 | 9 |
| SPROCKET/29 | 39 | 12 |
| STAY/BELT ASSY | 75 | 16 |
| STAY/CASE COMP | 38 | 12 |
| STAY/CONNECTOR | 86 | 37 |
| STAY/CONTROLLER | 88 | 8 |
| | 89 | 11 |
| STAY/COVER COMP | 47 | 5 |
| STAY/COVER/SIDE/P | 35 | 1 |
| STAY/CYLINDER | 50 | 12 |
| STAY/DEFFCABLE | 27 | 6 |
| STAY/EARTH COMP | 86 | 35 |
| | 87 | 21 |
| STAY/FENDER | 74 | 9 |
| STAY/GUARD/CONTAINER | 51 | 29 |
| | 52 | 21 |
| STAY/LAMP/FRONT COMP | 77 | 1 |
| | 78 | 1 |
| | 79 | 1 |
| STAY/PLUG | 3 | 14 |
| | 4 | 14 |
| STAY/PRECLEANER COMP | 8 | 19 |
| STAY/ROCK | 46 | 10 |
| | 47 | 13 |
| STAY/SENSOR | 17 | 13 |
| STAY/SWITCH/HST COMP | 82 | 49 |
| | 83 | 49 |
| | 84 | 31 |
| | 85 | 31 |
| STOPPER/B | 77 | 30 |
| | 79 | 30 |
| STOPPERBRACKET | 75 | 22 |
| STRING | 86 | 17 |
| STUD/M10X20/7T | 39 | 23 |
| STUD/M12X32/7T | 51 | 4 |
| | 52 | 4 |
| SUSPENSION ASSY | 75 | 5 |
| SWITCH/BEACON ASSY | 80 | 19 |
| | 81 | 13 |
| SWITCH/COMBINATION | 80 | 14 |
| | 81 | 25 |
| SWITCH/DPF ASSY | 80 | 24 |
| SWITCH/DPF/STOP ASSY | 80 | 25 |
| SWITCH/ECO ASSY | 80 | 26 |
| SWITCH/HAZARD ASSY | 80 | 17 |
| | 81 | 14 |
| SWITCH/LEVER ASSY | 82 | 50 |
| | 82 | 54 |
| | 82 | 62 |
| | 83 | 50 |
| | 83 | 54 |
| | 83 | 62 |
| | 84 | 32 |
| | 84 | 36 |
| | 84 | 44 |
| | 85 | 32 |
| | 85 | 36 |
| | 85 | 44 |
| SWITCH/LIMIT ASSY | 82 | 59 |
| | 83 | 59 |
| | 84 | 41 |
| | 85 | 41 |
| SWITCH/MAIN ASSY | 80 | 10 |
| | 81 | 15 |
| SWITCH/PTO ASSY | 80 | 21 |
| | 80 | 22 |
| | 81 | 11 |
| | 81 | 12 |
| SWITCH/PUSH ASSY | 82 | 42 |
| | 82 | 44 |
| | 83 | 42 |
| | 83 | 44 |
| | 84 | 24 |
| | 84 | 26 |
| | 85 | 24 |
| | 85 | 26 |
| TANK/FUEL | 12 | 1 |
| TANK/FUEL/237 | 13 | 1 |
| TIRE/23X10.5-12 ASSY | 43 | 1 |
| TIRE/F/18X8.50- ASSY | 63 | 1 |
| TIRE/TURF/18X8.50-8 | 63 | 2 |
| TIRE/TURF/23X10.5-12 | 43 | 2 |
| TOOL/FUSE | 86 | 15 |
| | 87 | 11 |
| TRAY/BOTTLE | 90 | 5 |
| | 91 | 5 |
| TRIM/140 | 88 | 4 |
| | 89 | 7 |
| TRIM/198 | 55 | 11 |
| | 56 | 11 |
| TRIM/230 | 55 | 4 |
| | 56 | 4 |
| TRIM/70 | 77 | 24 |
| | 78 | 24 |
| | 79 | 24 |
| TUBE/07X09X30 | 3 | 20 |
| | 4 | 20 |
| | 52 | 6 |
| | 53 | 10 |
| | 54 | 10 |
| TUBE/120 | 89 | 18 |
| TUBE/540 COMP | 32 | 23 |
| TURNBUCKLE/M8 | 41 | 35 |
| U-JOINT ASSY | 19 | 3 |
| | 20 | 4 |
| UNIT/TIMER ASSY | 82 | 33 |
| | 83 | 33 |
| | 84 | 15 |
| | 85 | 15 |
| U-NUT | 3 | 24 |
| | 4 | 23 |
| | 6 | 11 |
| | 57 | 9 |
| | 74 | 15 |
| | 93 | 10 |
| | 94 | 10 |
| UNUT(M8) | 77 | 9 |
| | 77 | 14 |
| | 78 | 9 |
| | 78 | 14 |
| | 79 | 9 |
| | 79 | 14 |
| U-NUT/M10X1.5 | 77 | 3 |
| | 78 | 3 |
| | 79 | 3 |
| UNUT/M8/CAP | 80 | 9 |
| VALVE | 7 | 5 |
| VALVE/1S-2D ASSY | 68 | 1 |
| VALVE/282 ASSY | 68 | 17 |
| VALVE/CHECK ASSY | 69 | 18 |
| | 70 | 19 |
| VALVE/PRV/B ASSY | 68 | 21 |
| VALVE/REDUCE/21 SET | 68 | 18 |

# Alpabetical Index




| Description | Fig. | Key |
|---|---|---|
| VALVE/RELIEF/32 SET | 106 | 35-A |
| VALVE/RELIEF/320 | 106 | 35 |
| VALVE/UNLOAD | 8 | 5 |
| | 9 | 4 |
| VIS | 107 | 3 |
| WASHER | 17 | 8 |
| | 75 | 29 |
| | 81 | 6 |
| | 108 | 1 |
| | 109 | 11 |
| | 110 | 3 |
| | 111 | 9 |
| WASHER, PL/M10 | 16 | 6 |
| | 17 | 10 |
| | 43 | 4 |
| | 58 | 5 |
| | 59 | 10 |
| | 60 | 10 |
| | 64 | 5 |
| | 64 | 46 |
| WASHER, PL/M12 | 1 | 7 |
| | 2 | 7 |
| | 72 | 5 |
| | 104 | 4 |
| WASHER, PL/M14 | 63 | 4 |
| WASHER, PL/M16 | 61 | 63 |
| | 71 | 9 |
| | 92 | 4 |
| WASHER, PL/M22 | 28 | 4 |
| | 41 | 16 |
| | 41 | 22 |
| WASHER, PL/M4 | 80 | 16 |
| | 81 | 27 |
| WASHER, PL/M5 | 64 | 8 |
| WASHER, PL/M6 | 16 | 9 |
| | 28 | 2 |
| | 37 | 5 |
| | 37 | 19 |
| | 41 | 2 |
| | 41 | 14 |
| | 41 | 28 |
| | 64 | 13 |
| | 64 | 25 |
| | 64 | 37 |
| | 77 | 28 |
| WASHER, PL/M6 | 78 | 28 |
| | 79 | 28 |
| | 93 | 9 |
| | 94 | 9 |
| WASHER, PL/M8 | 6 | 9 |
| | 10 | 4 |
| | 18 | 2 |
| | 28 | 7 |
| | 29 | 2 |
| | 36 | 35 |
| | 37 | 8 |
| | 37 | 13 |
| | 37 | 24 |
| | 37 | 29 |
| | 41 | 11 |
| | 41 | 19 |
| | 41 | 39 |
| | 42 | 8 |
| | 42 | 17 |
| | 58 | 10 |
| | 58 | 13 |
| | 64 | 19 |
| | 64 | 32 |
| | 64 | 43 |
| | 68 | 41 |
| | 80 | 7 |
| | 110 | 4 |
| WASHER, PULLEY | 93 | 18 |
| | 94 | 18 |
| | 103 | 5 |
| WASHER, SP/M10 | 5 | 4 |
| | 19 | 5 |
| | 20 | 8 |
| | 20 | 10 |
| | 43 | 5 |
| | 59 | 11 |
| | 60 | 11 |
| | 62 | 8 |
| WASHER, SP/M12 | 1 | 6 |
| | 1 | 17 |
| | 2 | 6 |
| | 36 | 5 |
| | 36 | 31 |
| | 51 | 16 |
| | 52 | 11 |
| WASHER, SP/M12 | 103 | 4 |
| | 104 | 3 |
| WASHER, SP/M14 | 63 | 5 |
| WASHER, SP/M16 | 71 | 10 |
| | 90 | 3 |
| | 90 | 10 |
| | 91 | 3 |
| | 91 | 10 |
| WASHER, SP/M6 | 17 | 19 |
| WASHER, SP/M8 | 6 | 12 |
| | 10 | 3 |
| | 22 | 4 |
| | 26 | 4 |
| | 36 | 23 |
| | 38 | 8 |
| | 66 | 11 |
| | 67 | 11 |
| | 68 | 40 |
| | 80 | 8 |
| | 110 | 5 |
| WASHER, SUPPORT | 36 | 30 |
| WASHER/05X20X01 | 90 | 6 |
| | 91 | 6 |
| WASHER/07X18X02 | 74 | 14 |
| WASHER/12X26X04 | 72 | 6 |
| WASHER/17X22X03 | 40 | 2 |
| WASHER/17X36X01 | 92 | 14 |
| WASHER/18X26X02 | 36 | 13 |
| | 36 | 27 |
| WASHER/24X9X3.2 | 3 | 25 |
| | 4 | 24 |
| WASHER/25X42X02 | 61 | 3 |
| WASHER/27X36X03 | 61 | 49 |
| WASHER/27X79X02 | 93 | 15 |
| | 94 | 15 |
| WASHER/30X46X03 | 25 | 4 |
| WASHER/31X42X1 | 39 | 21 |
| WASHER/38X12X2 | 36 | 3 |
| WASHER/50X62X02 | 25 | 13 |
| WASHER/9X32X2 | 74 | 3 |
| WASHER/A | 108 | 3 |
| WASHER/PINION | 26 | 9 |
| WASHER/RUBBER | 110 | 2 |
| WEIGHT/15 SET | 105 | 1 |
| WEIGHT/40 | 103 | 2 |

# Alpabetical Index




| Description | Fig. | Key | Description | Fig. | Key | Description | Fig. | Key |
|---|---|---|---|---|---|---|---|---|
| WEIGHT/REAR SET | 103 | 1 | | | | | | |
| WHEEL/12XW7 COMP | 43 | 3 | | | | | | |
| WHEEL/8X7 COMP | 63 | 3 | | | | | | |
| WHEEL/STEERING | 45 | 1 | | | | | | |
| WHEEL/STEERING/360 | 44 | 1 | | | | | | |